One- and Two Family Dwelling Electrical Systems – 2015 IRC

ICC Annual Conference- Kansas City, MO

Training Presentation by:

International Association of Electrical Inspectors

Int... Pro... IAEI

One- and Two Family Dwelling Electrical Systems – 2014 *NEC*

- Presentation based on IAEI's *One- and Two-Family Dwelling Electrical Systems* , 9th edition textbook
- This textbook is based on the requirements contained the 2014 *NEC* and the 2015 *IRC*

Intellectual Property of IAEI

2015 IRC Part VIII - Electrical

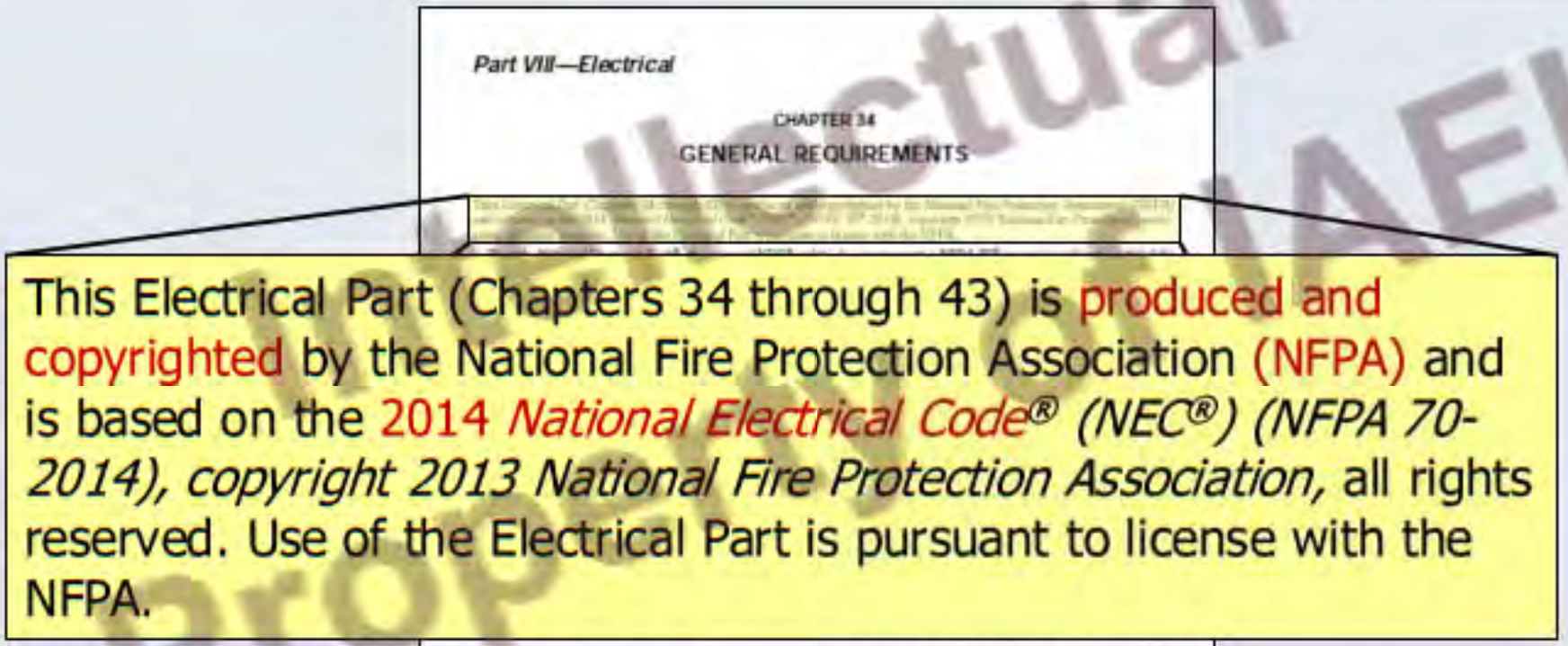

This Electrical Part (Chapters 34 through 43) is produced and copyrighted by the National Fire Protection Association (NFPA) and is based on the 2014 *National Electrical Code® (NEC®) (NFPA 70-2014), copyright 2013 National Fire Protection Association,* all rights reserved. Use of the Electrical Part is pursuant to license with the NFPA.

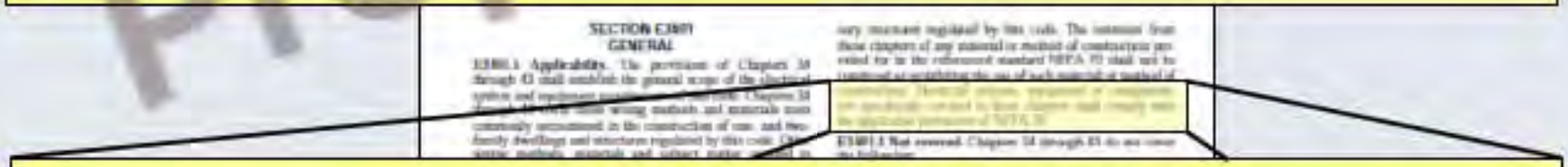

E3401.2 Scope

Electrical systems, equipment or components **not specifically covered** in these Chapters (34 - 43) **shall comply** with the applicable provisions of the **NFPA 70**.

Intellectual Property of IAEI

Copyright © IAEI 2014

Referencial
NO VALE

Chapter 35: Definitions

- **Approved:** "Acceptable to the authority having jurisdiction."
- **Authority Having Jurisdiction (AHJ):** "The organization, office, or individual responsible for approving equipment, materials, an installation, or a procedure." *(NEC Article 100)*

Intellectual Property of IAEI

Copyright © IAEI 2014

NEC 90.4 Authority Having Jurisdiction (AHJ)

Inspector

Responsible for approvals
Responsible for interpretations
Grants special permission

Dwelling occupancies

Note: IRC R104.1 designates the Building Official as the "AHJ"

Copyright © IAEI 2014

Intellectual property of IAEI

Chapter 35: Definitions

- **Ground-Fault Circuit Interrupter (GFCI).** "A device intended for the protection of personnel that functions to de-energize a circuit or portion thereof within an established period of time when a current to ground exceeds the values established for a Class A device."
- *NEC* Informational Note: Class A ground-fault circuit interrupters trip when the current to ground is 6 mA or higher and do not trip when the current to ground is less than 4 mA
- For further information, see UL 943, *Standard for Ground-Fault Circuit Interrupters*

Intellectual Property of IAEI

Copyright © IAEI 2014

E3902.14 GFCIs in Readily Accessible Locations

All GFCIs for personnel must be installed in a readily accessible location

NEC 210.8

Intellectual Property of IAEI

Copyright © IAEI 2014

E3902: GFCI for Dwelling Units

All 125-volt, single-phase, 15- and 20-ampere receptacles installed in the following locations shall have GFCI protection for personnel:

1. **Bathrooms**
2. **Garages** (accessory buildings)
3. **Outdoors**

   Ex. to (3): Receptacles that are not readily accessible and are supplied by a dedicated branch circuit for electric snow-melting or deicing equipment [E4101.7]

4. **Crawl spaces** — at or below grade level

Note: These GFCI devices shall be installed in a readily accessible location

NEC 210.8(A)

Intellectual Property of IAEI

Copyright © IAEI 2014

E3902: GFCI for Dwelling Units *(cont.)*

All 125-volt, single-phase, 15- and 20-ampere receptacles installed in the following locations shall have GFCI protection for personnel:

5. **Unfinished basements**

   Ex. to (5): A receptacle supplying only a permanently installed fire alarm or burglar alarm system

6. **Kitchens** — where the receptacles are installed to serve the countertop surfaces
7. **Sinks** — [installed within 1.8 m (6 ft) of the outside edge of the sink]
8. **Bathtub and Shower Stalls** – [installed within 1.8 m (6 ft) of the outside edge of the bathtub or shower stall]

Note: These GFCI devices shall be installed in a readily accessible location

Intellectual Property of IAEI

Copyright © IAEI 2014

E3902: GFCI for Dwelling Units *(cont.)*

All 125-volt, single-phase, 15- and 20-ampere receptacles installed in the following locations shall have GFCI protection for personnel:

9. **Laundry Areas**
10. **Kitchen Dishwasher Branch Circuit** — outlets that supply dishwashers
11. **Boathouses**
12. **Boat Hoists** — for 240 volt or less outlets that supply boat hoist *(readily accessible location)*
13. **Electrically Heated Floors** — bathrooms, kitchens, hydromassage bathtub, spa and hot tub locations

Note: These GFCI devices shall be installed in a readily accessible location

Intellectual Property of IAEI

Copyright © IAEI 2014

E3902.1 GFCI Protection for Bathrooms

A bathroom is defined as "an area including a basin with one or more of the following: a toilet, a urinal, a tub, a shower, a bidet, or a similar plumbing fixtures"

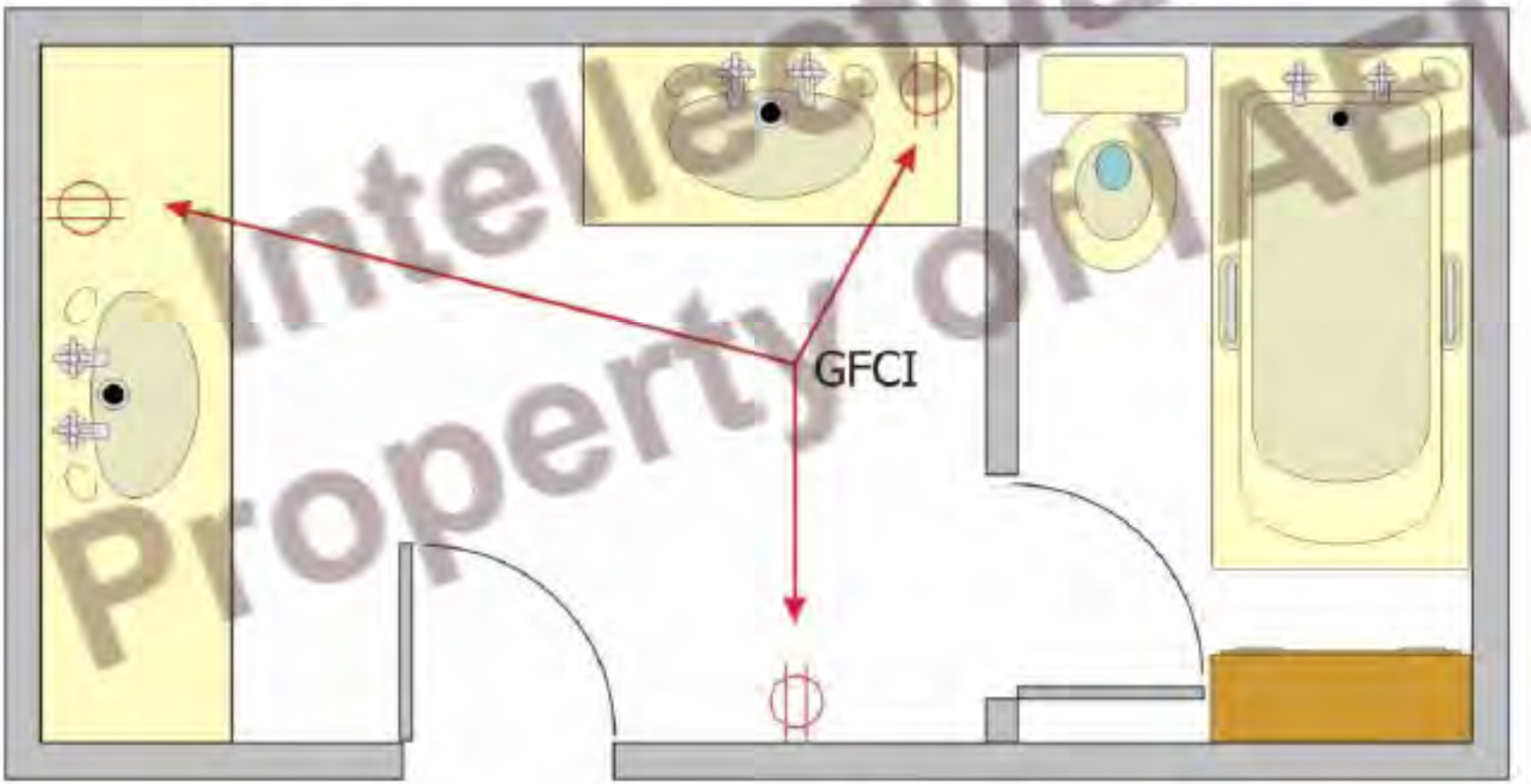

A bathroom with (2) basins, a toilet, and a tub

Intellectual Property of IAEI

Copyright © IAEI 2014

NEC 210.8(A)(1)

E3902.2 GFCI Protection in Garages

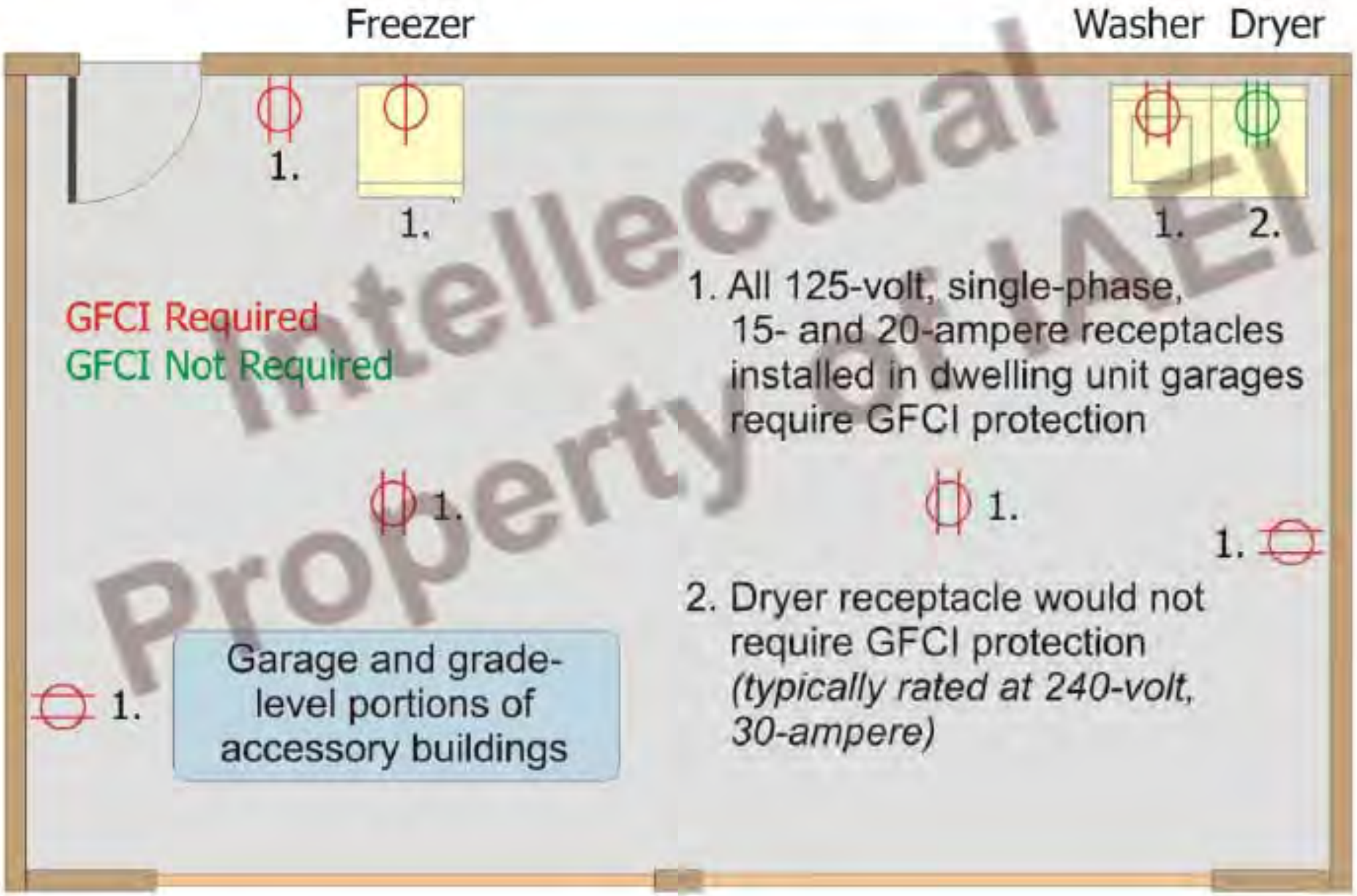

Intellectual Property of IAEI

Copyright © IAEI 2014

NEC 210.8(A)(2)

E3902.3 GFCI Protection Outdoor Receptacles

All 125-volt, single-phase, 15- and 20-ampere receptacles installed outdoors shall have GFCI protection for personnel

GFCI not required for 15- and 20-ampere receptacle dedicated for deicing or snow melting equipment *(that is not readily accessible)*

Intellectual Property of IAEI

Copyright © IAEI 2014

NEC 210.8(A)(3)

E3902.5 GFCI Protection Unfinished Basements

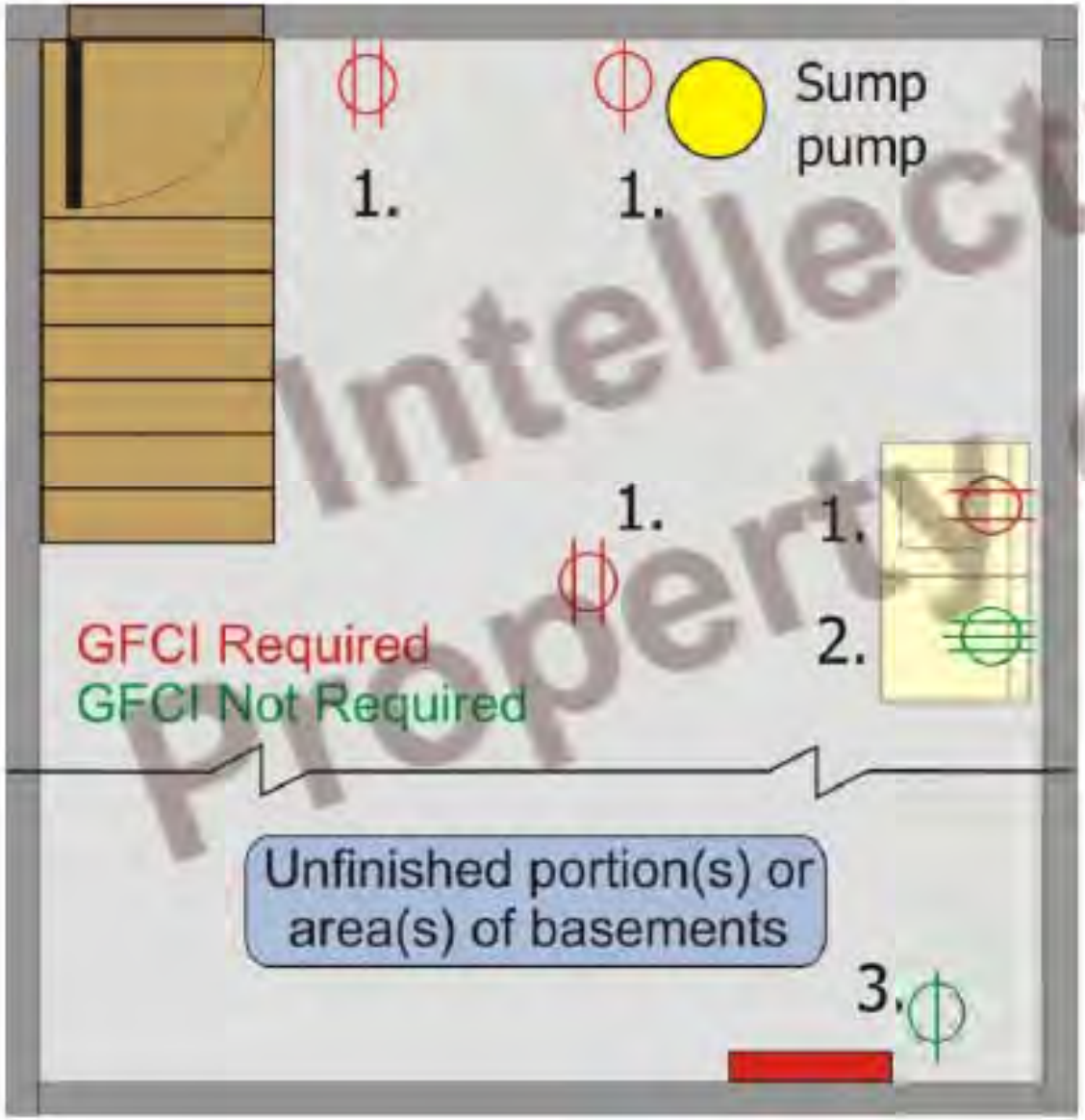

1. All 125-volt, single-phase, 15- and 20-ampere receptacles installed in unfinished basements require GFCI protection (one exception-see below)
2. Dryer receptacle would not require GFCI protection as this is typically rated at 240 -volt, 30-ampere
3. A single receptacle supplying a permanently installed burglar/fire alarm system is not required to have GFCI protection

NEC 210.8(A)(5)

Intellectual Property of IAEI

Copyright © IAEI 2014

E3902.6 GFCI Kitchen Countertop Receptacles

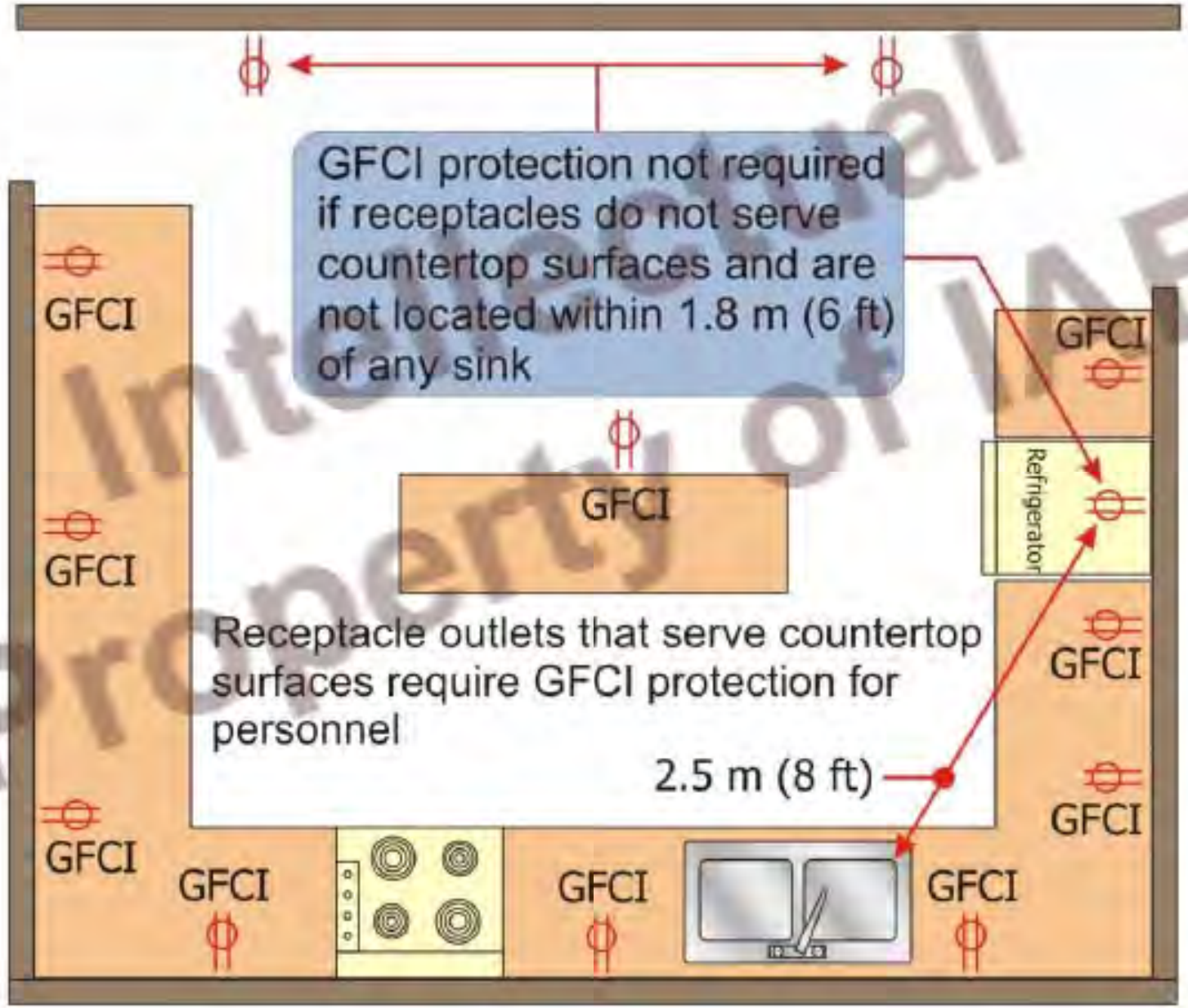

Internal Property of IAEI

Copyright © IAEI 2014

NEC 210.8(A)(6) and (A)(7)

E3902.7 GFCI Required at Dwelling Unit Sinks

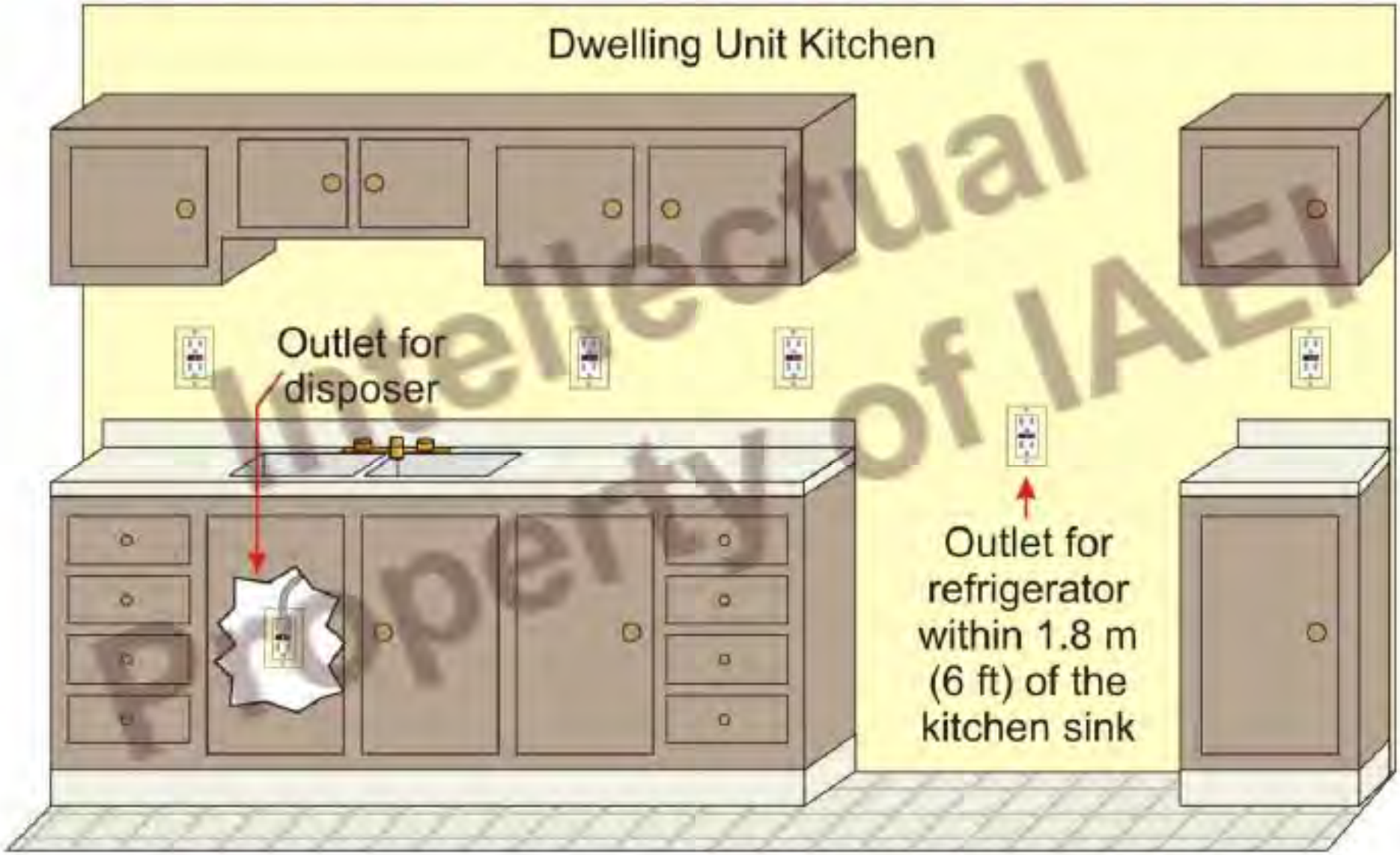

All 125-volt, single-phase, 15- and 20-ampere receptacles installed within 1.8 m (6 ft) of the outside edge of any dwelling unit sink now require GFCI protection

NEC 210.8(A)(7)

Intellectual Property of IAEI

Copyright © IAEI 2014

E3902.7 GFCI Dwelling Unit Sinks

GFCI required for all 125-volt, single-phase, 15- and 20-ampere receptacles installed within 1.8 m (6 ft) of the outside edge of a dwelling unit sink *(laundry, utility, mud room, kitchen, wet bar, etc.)*

NEC 210.8(A)(7)

Copyright © IAEI 2014

Intellectual Property of IAEI

E3902.8 GFCI Bathtub or Shower Stalls

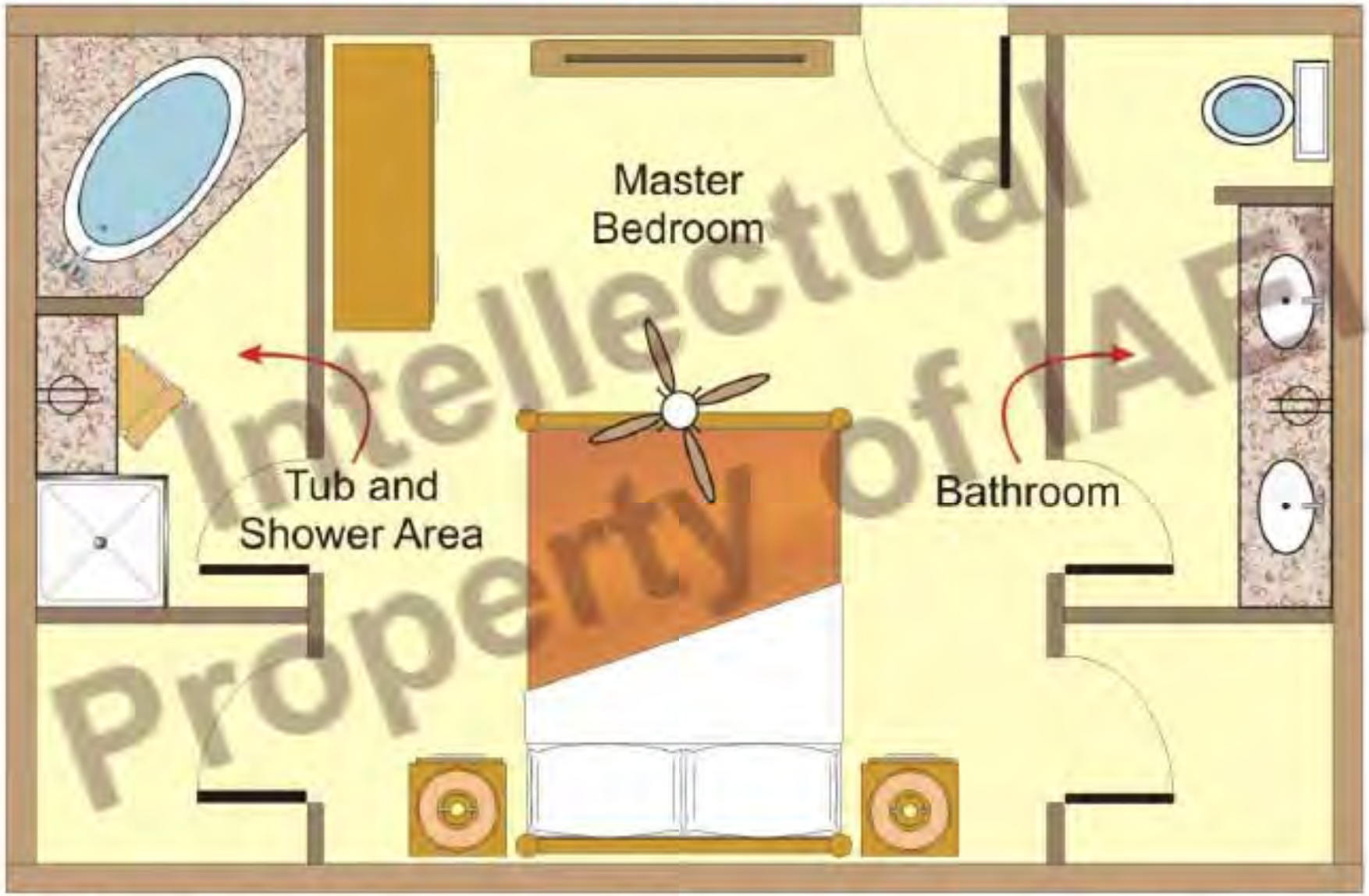

Intellectual Property of IAEI

All 125-volt, single-phase, 15- and 20-ampere receptacles installed within 1.8 m (6 ft) of the outside edge of a dwelling unit bathtub or shower stall requires GFCI protection

NEC 210.8(A)(9)

Copyright © IAEI 2014

E3902.9 GFCI Dwelling Laundry Areas

Intellectual Property of IAEI

GFCI protection required for all 125-volt, single-phase, 15- and 20-ampere receptacles located in a laundry room areas *(with or without a sink present)*

NEC 210.8(A)(10)

Copyright © IAEI 2014

E3902.12 GFCI for Boat Hoists

- Ground-fault circuit-interrupter protection for personnel required to be provided for outlets that supply boat hoists installed in dwelling unit locations
- Required for all outlets rated up to and including 240 volt branch circuits supplying dwelling unit boat hoists
- Applies to both cord and plug connected and direct-wired
- GFCI protection also required for all 125-volt, single-phase, 15- and 20-ampere receptacles installed at dwelling unit boathouses [E3902.11] [*NEC* 210.8(A)(8)]

NEC 210.8(C)

Intellectual Property of IAEI

Copyright © IAEI 2014

E3902.10 Dwelling Unit Kitchen Dishwasher Branch Circuit

- GFCI protection now required for all outlets that supply dishwashers installed in dwelling units
  - Includes both receptacle and hard-wired outlet for dishwasher
- Modern-day electronically controlled dishwashers can experience "end of life" failures that can result in increased risk of electrical shock
- GFCI protection for outlets supplying dishwashers can mitigate these increased risk of electrical shock

NEC 210.8(D)

Intellectual Property of IAEI

Copyright © IAEI 2014

GFCI - Swimming Pools, Spas, Hot Tubs

- There are several ground-fault circuit-interrupter (GFCI) requirements in IRC Chapter 42 *[NEC Article 680]* pertaining to swimming pools, spas, hot tubs, etc.
- These GFCI requirements are discussed in great detail in Chapter 14 of this presentation

Intellectual Property of IAEI

Copyright © IAEI 2014

E4209.1 GFCI for Hydromassage Bathtubs

- Hydromassage bathtubs and their associated electrical components are required to have ground-fault circuit interrupter (GFCI) protection
- This GFCI protection shall comply with the following:
  - Be on an individual branch circuit(s)
  - GFCI device shall be readily accessible
- All 125-volt, single-phase 15-, 20-, and 30-ampere receptacles located within 1.83 m (6 ft) of the inside walls of a hydromassage tub require GFCI protection

NEC 680.71

Intellectual Property of IAEI

Copyright © IAEI 2014

E4209.1 GFCI for Hydromassage Bathtub

Intellectual Property of IAEI

Hydromassage bathtub electrical equipment requires GFCI protection from individual branch circuit

GFCI device required to be readily accessible

All 125-volt, single phase receptacles (up to 30 ampere) located within 1.83 m (6 ft) of hydromassage tub require GFCI protection

NEC 680.71

Copyright © IAEI 2014

E3902.12 Arc-Fault Circuit-Interrupters

- AFCI is a device intended to provide protection from the effects of arcing type faults
- AFCI recognizes the characteristics that are unique to arcing
- The entire branch circuit is required to be protected
- Required for all 125-volt, single-phase, 15- and 20-ampere branch circuits supplying outlets and devices installed in dwelling unit in the following locations:

kitchens	family rooms	dining rooms
living rooms	parlors	libraries
dens	bedrooms	sun rooms
recreation rooms	closets	hallways
laundry areas	similar rooms or areas	

NEC 210.12(A)

Intellectual Property of IAEI

Copyright © IAEI 2014

E3902.16 AFCI Protection Required

Green shaded area = AFCI required area

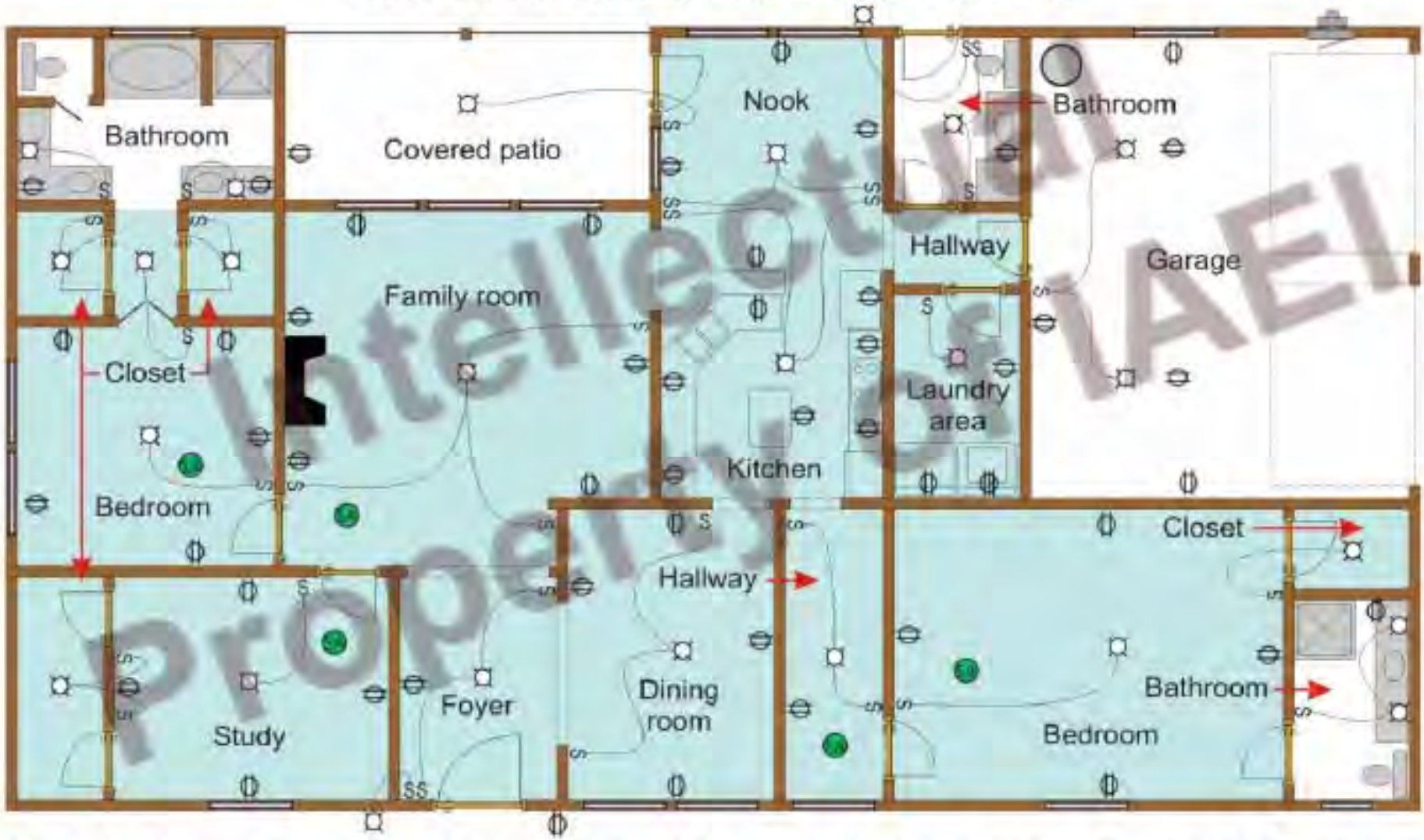

AFCI protection is required for all 125 volt, single-phase,15- and 20-ampere branch circuits supplying outlets and devices in several areas of a dwelling unit *(including 125 volt, single-station smoke alarms)*

NEC 210.12(A)

Copyright © IAEI 2014

Intellectual Property of IAEI

E3902.16 Arc-Fault Circuit-Interrupter Protection

Listed Outlet Branch-Circuit Type AFCI Devices

Courtesy of Pass & Seymour/Legrand

Listed Combination Overcurrent Protection Type AFCI Device

Courtesy of Eaton Corporation

Intellectual Property of IAEI

Copyright © IAEI 2014

NEC 210.12

Dual Function AFCI/GFCI Protection

Courtesy of Schneider Electric

- Square D QO™ and HomeLine™ Dual Function Circuit Breaker
- Dual-Function Arc Fault and Ground Fault protection, in a single, easy-to-install device

Intellectual Property of IAEI

Copyright © IAEI 2014

E3902.16 AFCI Protection

All 120-volt, single phase, 15- and 20-ampere branch circuits supplying outlets or devices installed in specified areas of dwelling unit shall be protected by any of the means described in (1) through (6):

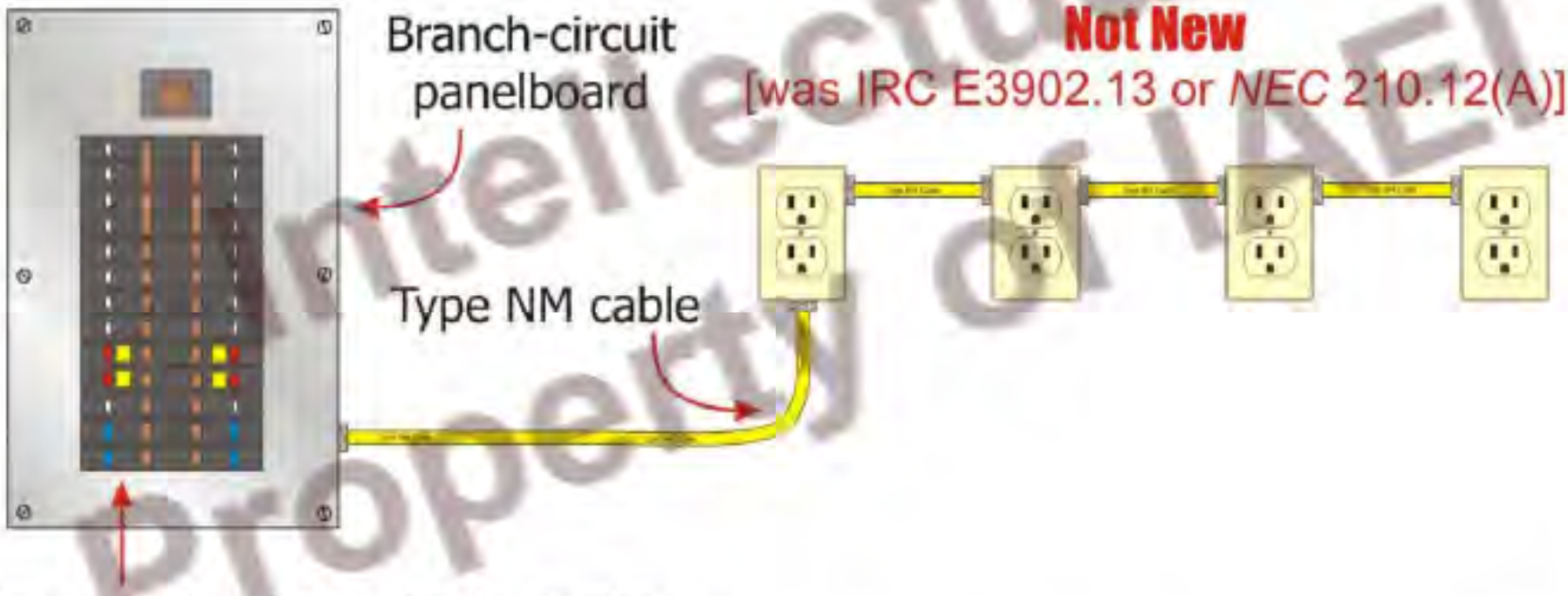

(1) A listed combination type arc-fault circuit interrupter, installed to provide protection of the entire branch circuit

Intellectual Property of IAEI

Copyright © IAEI 2014

NEC 210.12(A)

E3902.16 AFCI Protection

All 120-volt, single phase, 15- and 20-ampere branch circuits supplying outlets or devices installed in specified areas of dwelling unit shall be protected by any of the means described in (1) through (6):

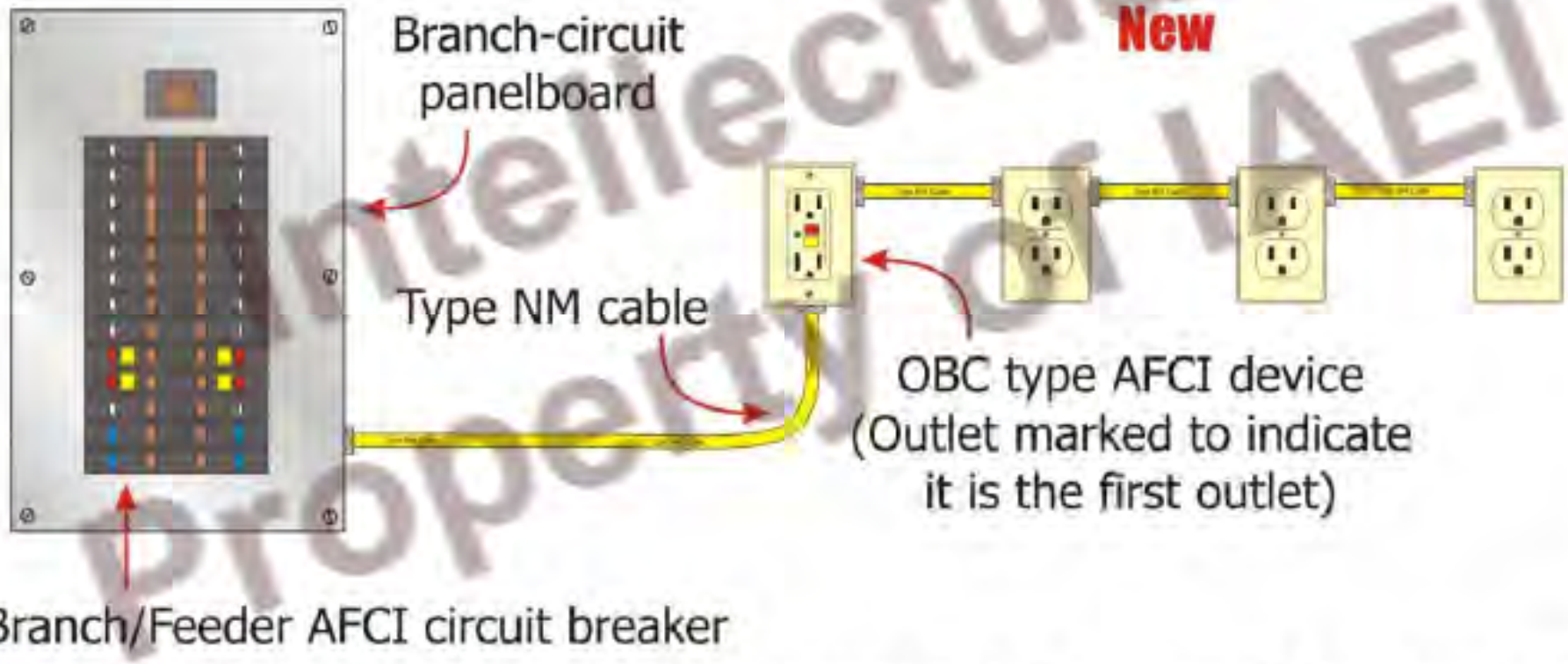

(2) A listed branch/feeder type AFCI installed at the origin of the branch circuit in combination with a listed outlet branch circuit type AFCI installed at the first outlet box on the branch circuit (first outlet marked to indicate that it is the first outlet)

NEC 210.12(A)

Intellectual Property of IAEI

Copyright © IAEI 2014

E3902.16 AFCI Protection

All 120-volt, single phase, 15- and 20-ampere branch circuits supplying outlets or devices installed in specified areas of dwelling unit shall be protected by any of the means described in (1) through (6):

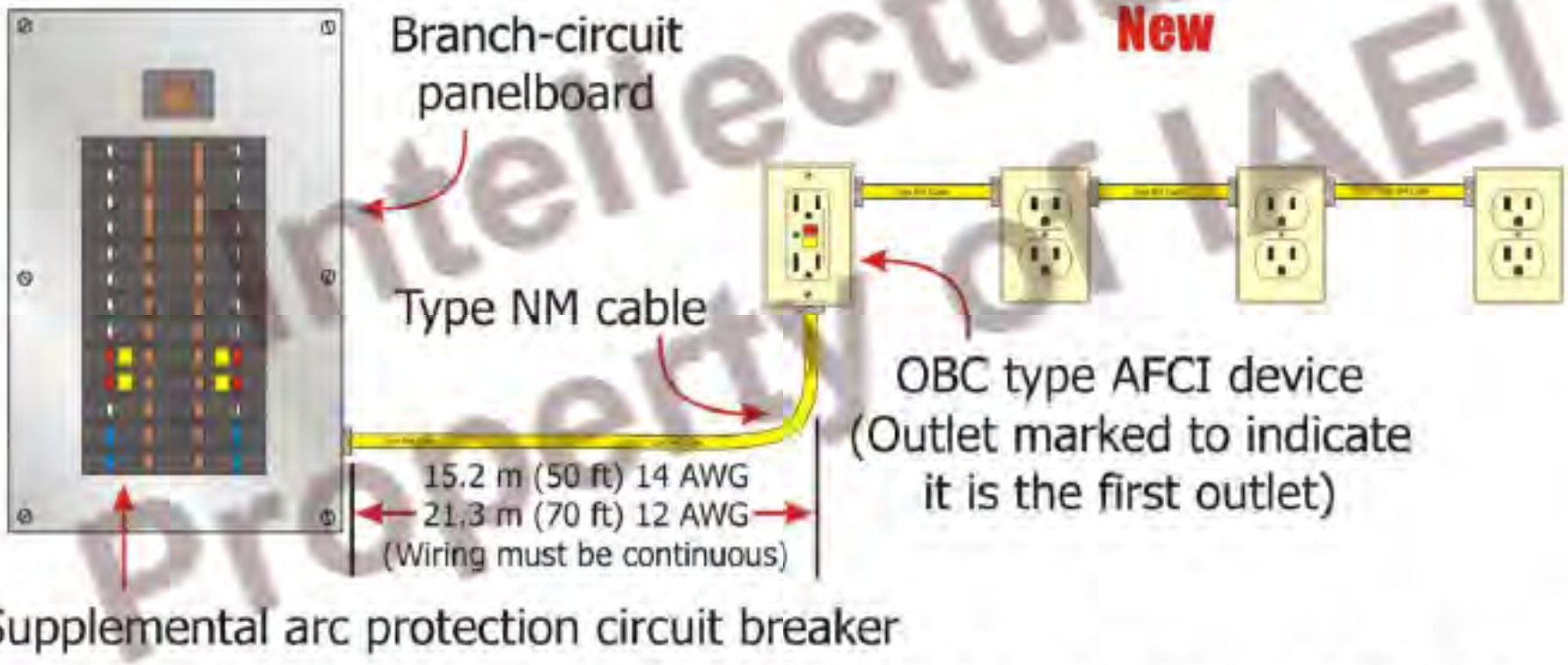

(3) A listed supplemental arc protection circuit breaker installed at the origin of the branch circuit in combination with a listed outlet branch circuit type AFCI installed at the first outlet box on the branch circuit (with three limiting conditions)

NEC 210.12(A)

Intellectual Property of IAEI

Copyright © IAEI 2014

E3902.16 AFCI Protection

All 120-volt, single phase, 15- and 20-ampere branch circuits supplying outlets or devices installed in specified areas of dwelling unit shall be protected by any of the means described in (1) through (6):

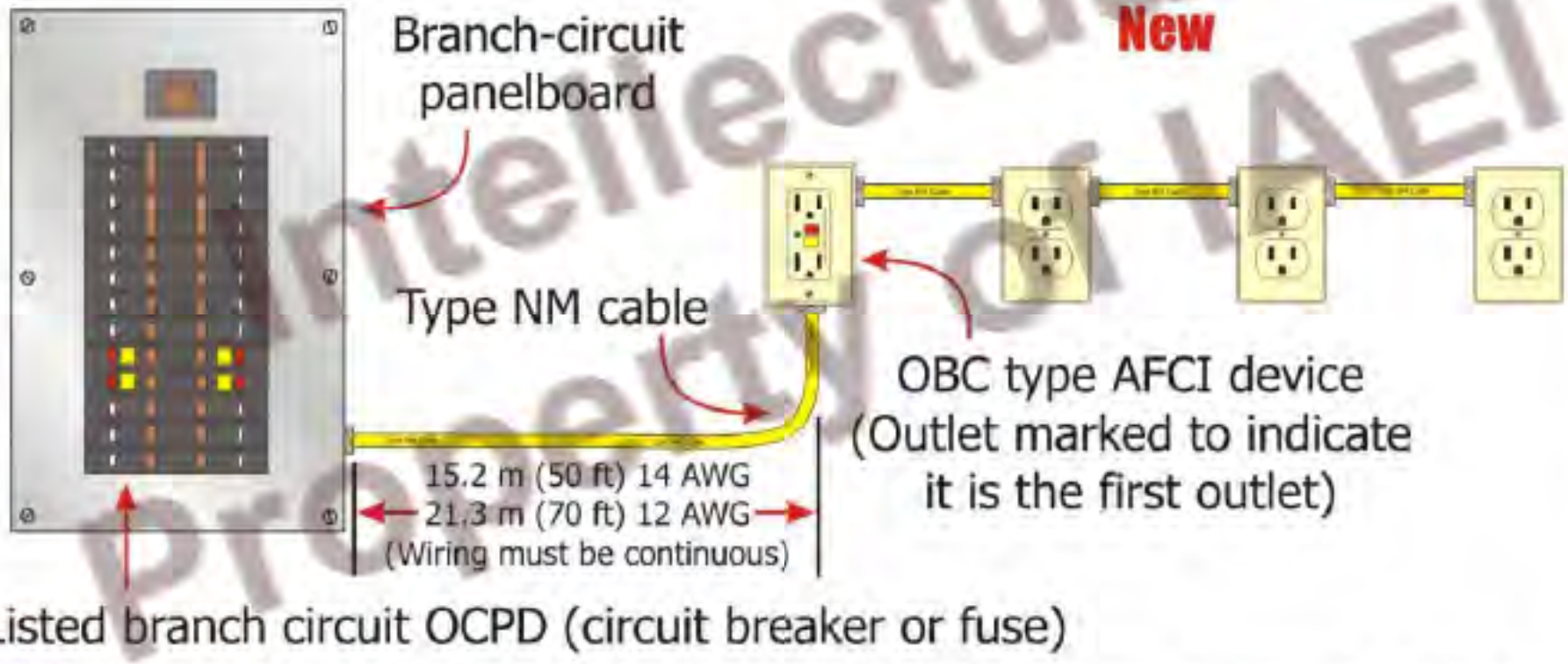

(4) System Combination Type AFCI. A listed outlet branch circuit type AFCI installed at the first outlet in combination with a listed branch circuit over-current protective device (with four limiting conditions) (OCPD & OBC AFCI device must be identified and listed as "System Combination" type AFCI)

NEC 210.12(A)

Intellectual Property of IAEI

Copyright © IAEI 2014

E3902.16 AFCI Protection

All 120-volt, single phase, 15- and 20-ampere branch circuits supplying outlets or devices installed in specified areas of dwelling unit shall be protected by any of the means described in (1) through (6):

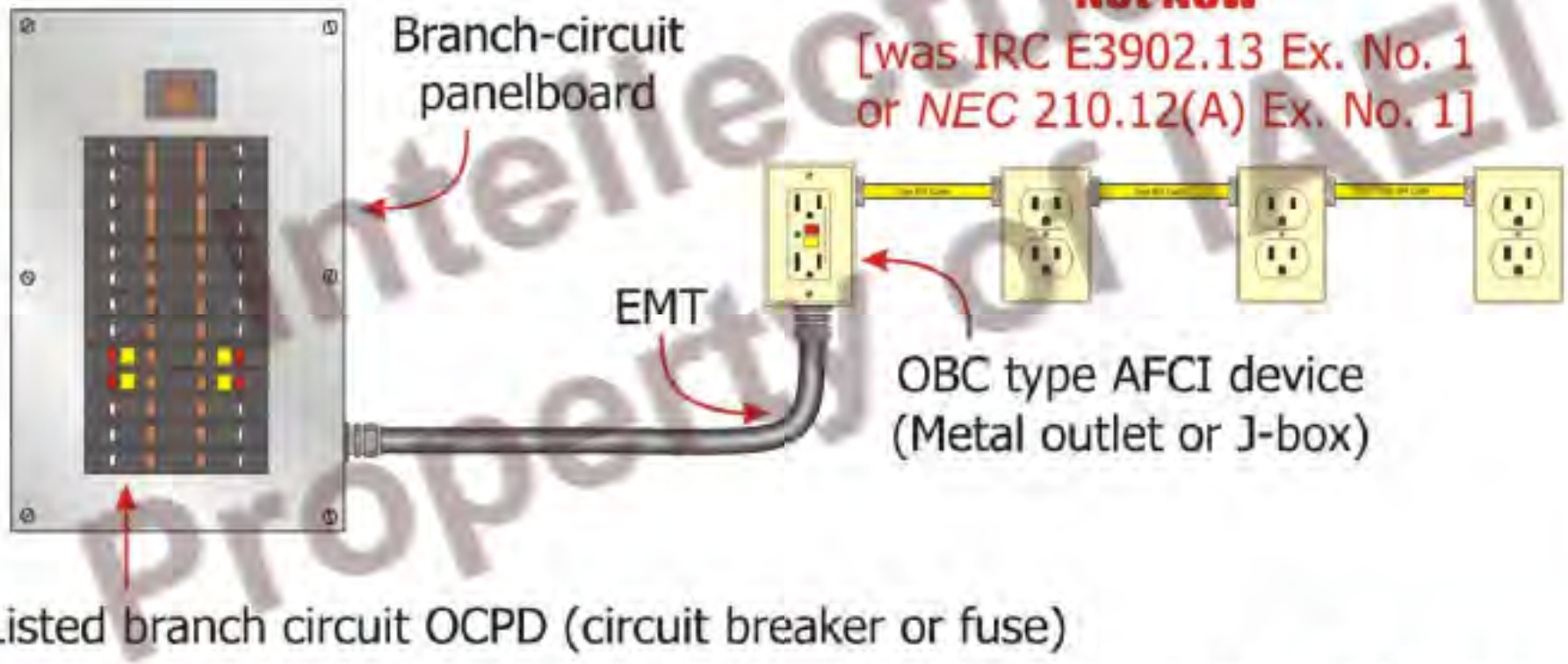

(5) A listed outlet branch-circuit type AFCI device (first outlet) is permitted with RMC, IMC, EMT, Type MC, steel armored Type AC cables, metal wireways, or metal auxiliary gutters and metal outlet and junction boxes installed for the portion of the branch circuit between the OCPD and the first outlet

NEC 210.12(A)

Intellectual Property of IAEI

Copyright © IAEI 2014

E3902.16 AFCI Protection

All 120-volt, single phase, 15- and 20-ampere branch circuits supplying outlets or devices installed in specified areas of dwelling unit shall be protected by any of the means described in (1) through (6):

Not New
[was IRC E3902.13 Ex. No. 2
or *NEC* 210.12(A) Ex. No. 2]

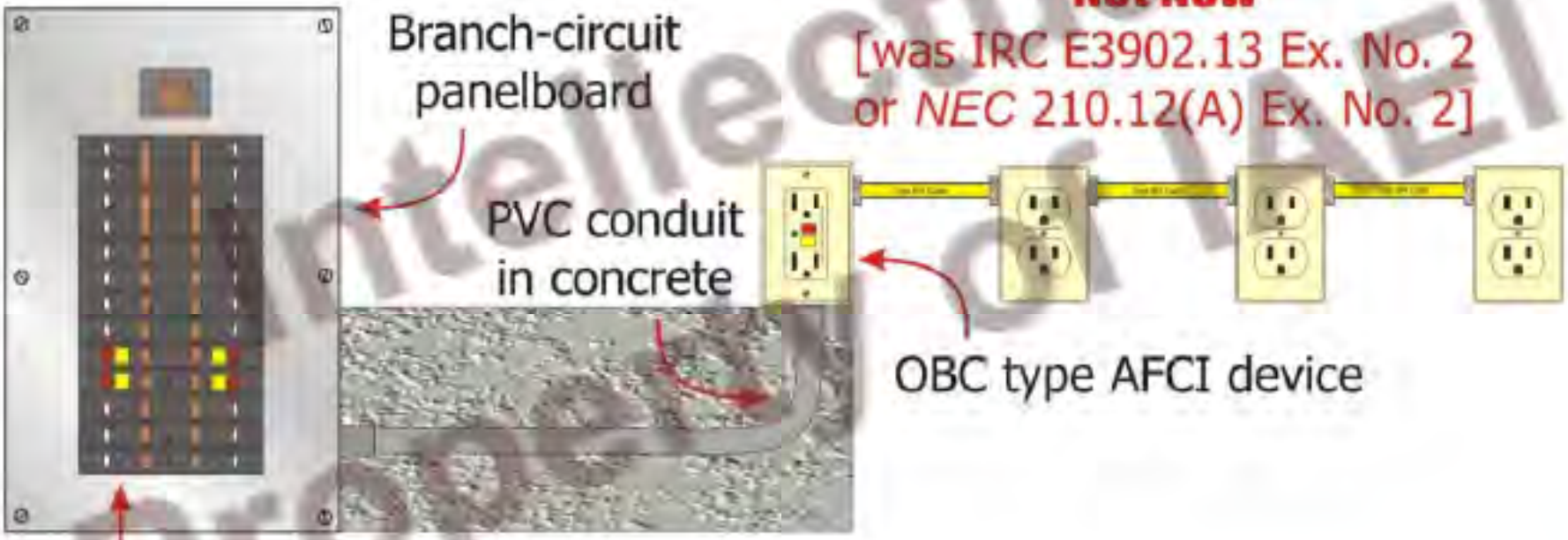

(6) Where a listed metal or nonmetallic conduit or tubing or Type MC cable is encased in not less than 50mm (2 in.) of concrete for the portion of the branch circuit between the OCPD and the first outlet, it shall be permitted to install an a listed outlet branch circuit type AFCI at the first outlet

NEC 210.12(A)

Copyright © IAEI 2014
Intellectual Property of IAEI

E3902.16 (1.) Combination AFCI Protection

All 120 volt, single phase, 15- and 20-ampere branch circuits supplying outlets or devices installed in dwelling unit bedrooms and other areas of the dwelling are required to be protected by a listed combination arc-fault circuit interrupter device when E3902.16 (1.) is employed

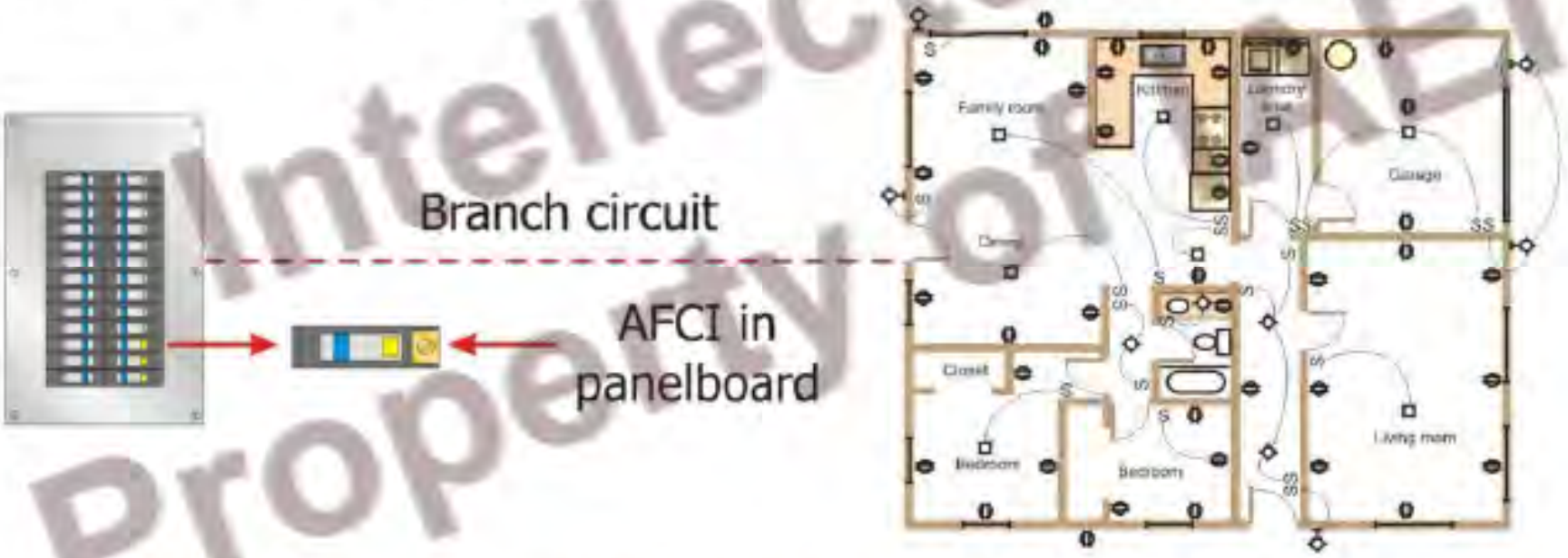

AFCI protection required to be of the combination type

Combination type AFCI detects both parallel and series arc faults

Parallel Arc Fault = Direct contact of two opposite polarities

Series Arc Fault = An arc across a break in a conductor

NEC 210.12(A)(1)

Intellectual Property of IAEI

Copyright © IAEI 2014

E3902.17 AFCI for Extensions or Modifications

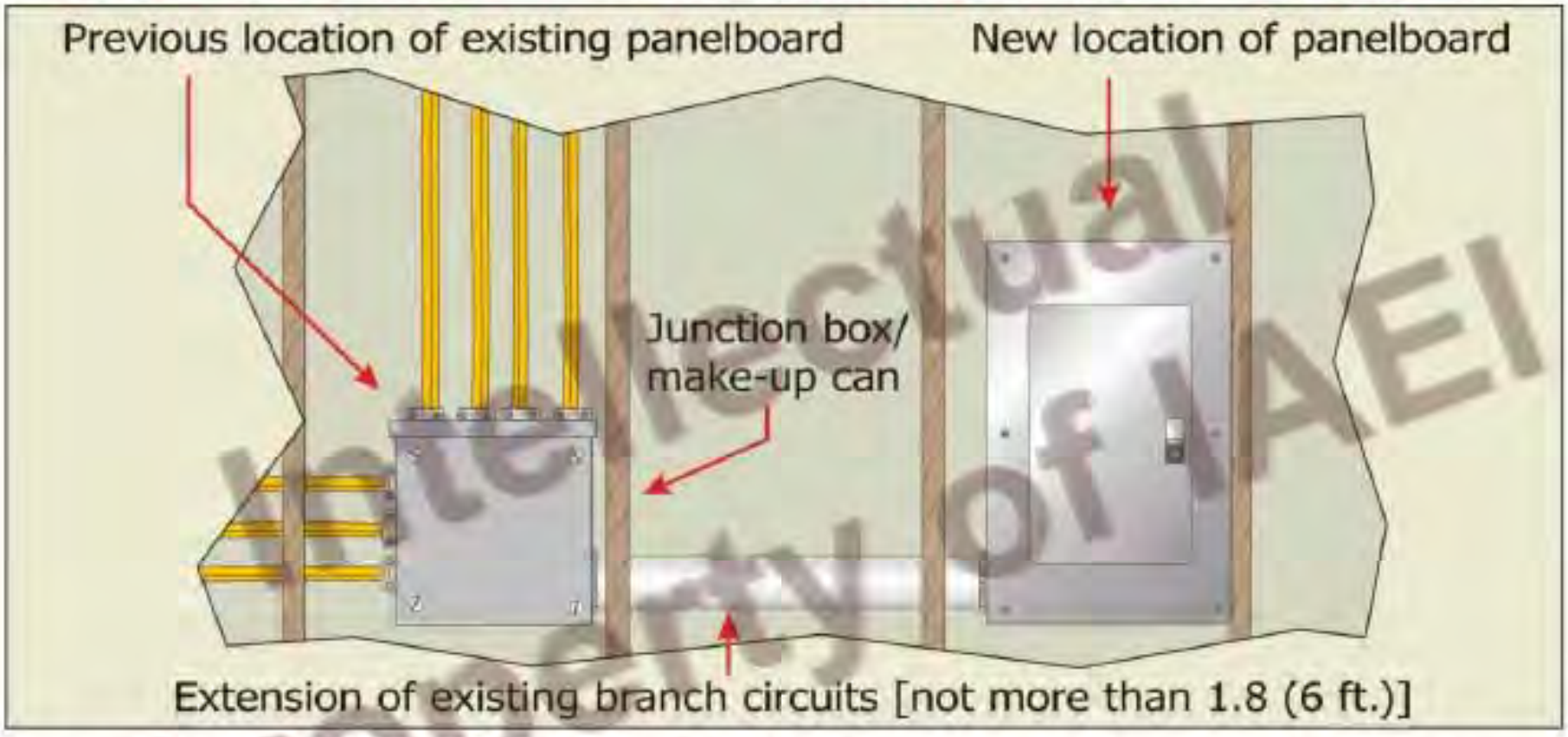

In any of the areas specified in E3902.16, where branch-circuit wiring is modified, replaced or extended, the branch circuit shall be protected by:

(1) A listed combination AFCI located at the origin of the branch circuit, or

(2) A listed outlet branch-circuit AFCI located at the first receptacle outlet of the existing branch circuit

Exception: *AFCI protection is not required where the extension is not more than 1.8 m (6 ft.) and does not include any additional outlets or devices*

NEC 210.12(B)

Copyright © IAEI 2014

Intellectual Property of IAEI

E3902.17 AFCI for Extensions or Modifications

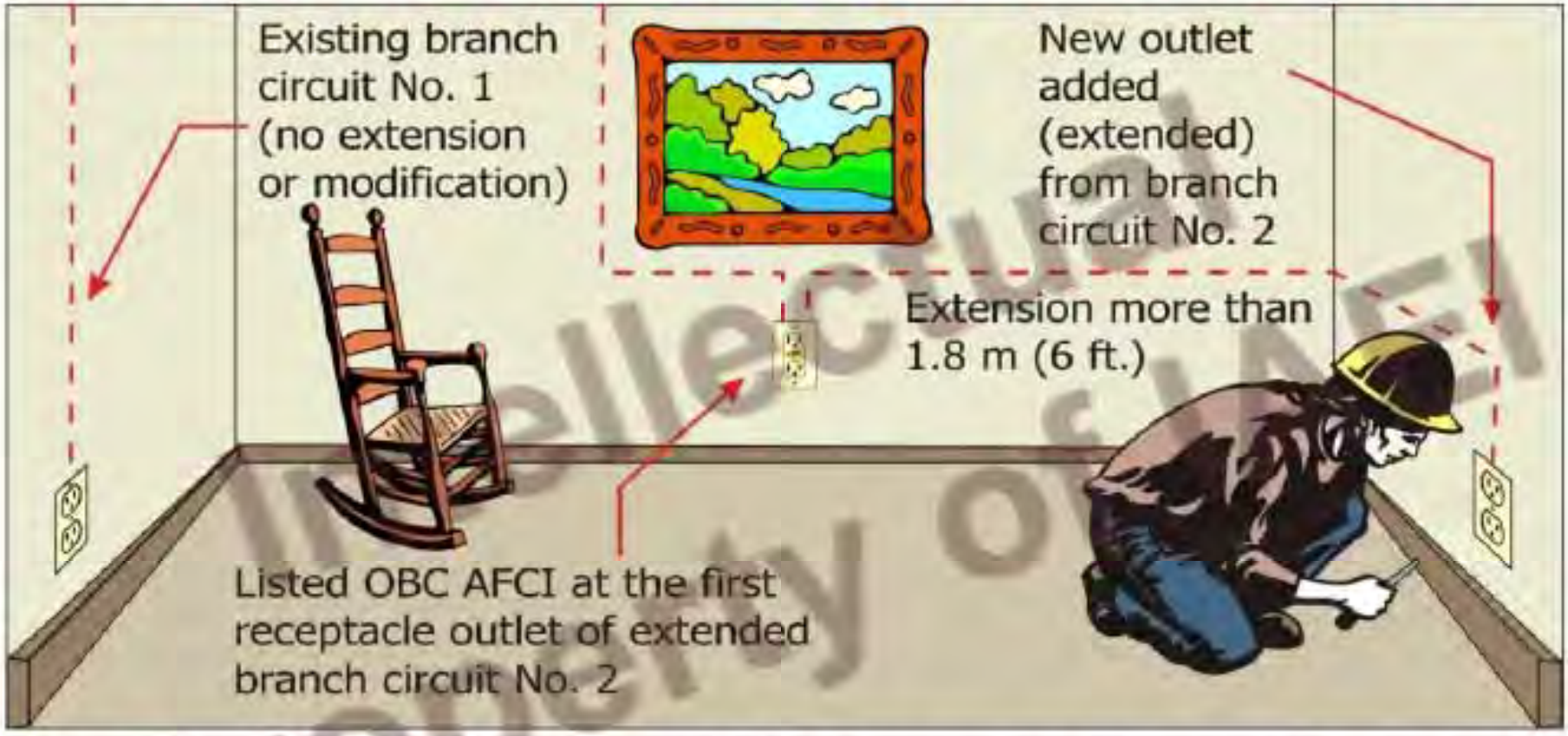

In any of the areas specified in E3902.16, where branch-circuit wiring is modified, replaced or extended, the branch circuit shall be protected by:

(1) A listed combination AFCI located at the origin of the branch circuit, or

(2) A listed outlet branch-circuit AFCI located at the first receptacle outlet of the existing branch circuit

Exception: *AFCI protection is not required where the extension is not more than 1.8 m (6 ft.) and does not include any additional outlets or devices*

NEC 210.12(B)

Copyright © IAEI 2014

Intellectual Property of IAEI

E3901.2 Dwelling Unit Receptacle Outlets

- Spacing rules call for installation of receptacle outlets so that no point along the floor line in any wall space is more than 1.8 m (6 ft) measured horizontally from an outlet in that space [E3901.2.1]
- Includes 600 mm (2 ft) wall space and wall space occupied by fixed panels in exterior or interior walls [E3901.2.2]
- Does not include sliding panels in exterior or interior walls [E3901.2.2]
- Fixed room dividers are included in the 1.8 m (6 ft) measurement [E3901.2.2]

NEC 210.52(A)

Intellectual Property of IAEI

Copyright © IAEI 2014

E3901.2 Receptacle Location and Spacing

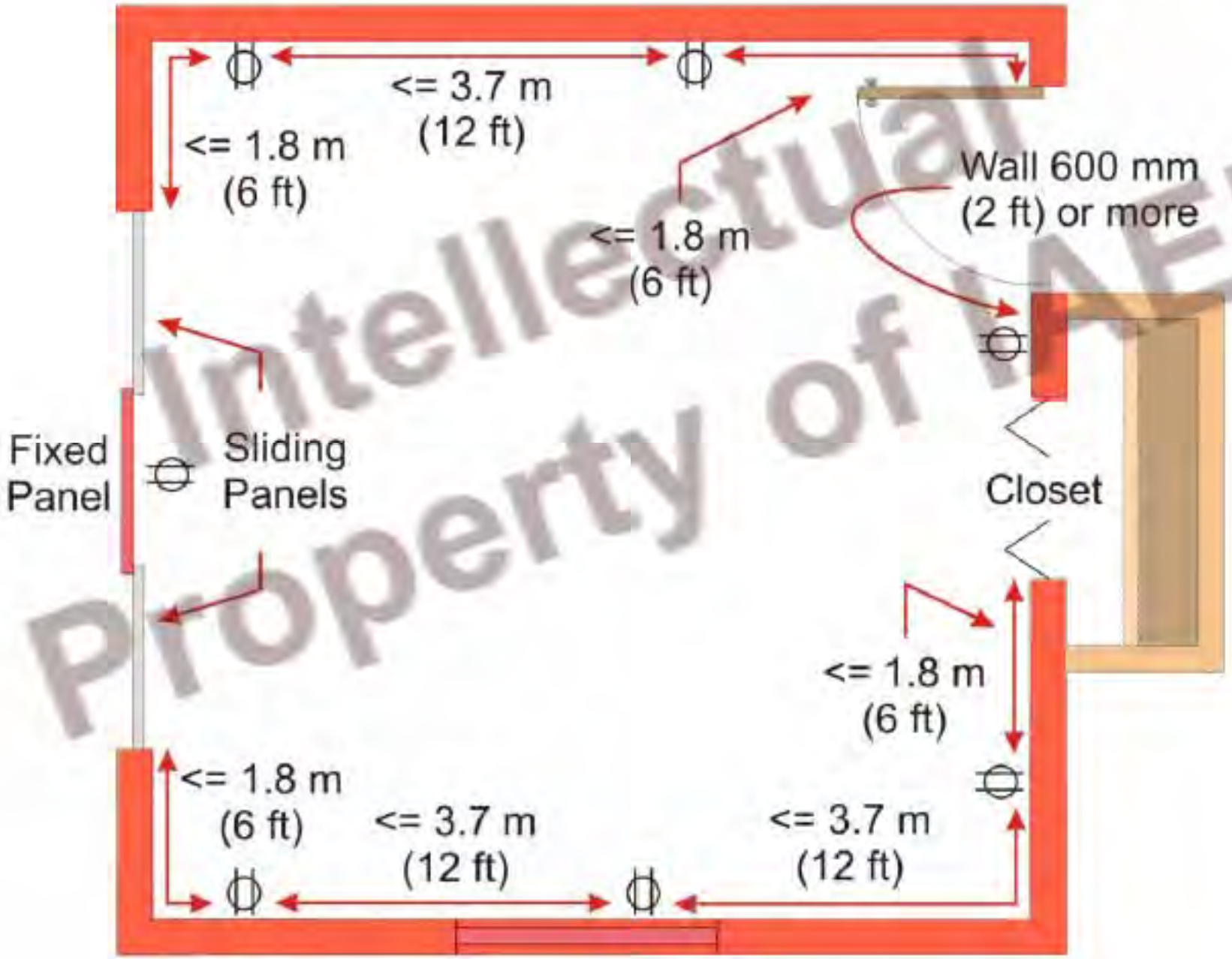

Intellectual Property of IAEI

Copyright © IAEI 2014

NEC 210.52(A)

E3901.3 Small Appliance Receptacles

Minimum of two small appliance branch circuits limited to receptacle outlets only in kitchens, dining rooms, and similar areas

(See exceptions for clock outlet and gas appliances)

An additional dedicated 15-ampere or greater branch circuit permitted for refrigeration equipment

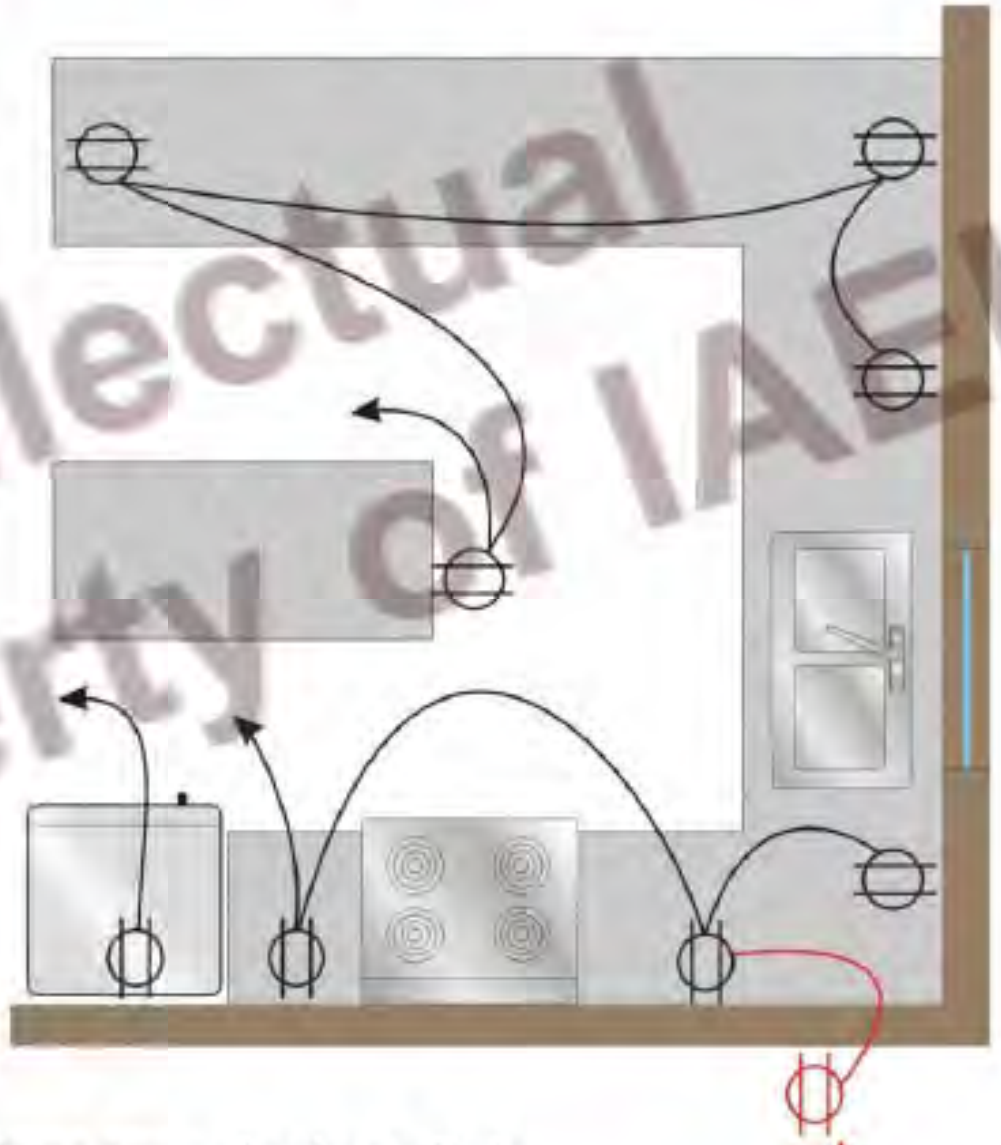

Other outlets such as outdoor receptacle outlets NOT permitted on small appliance branch circuits

NEC 210.52(B)

Intellectual property of IAEI

Copyright © IAEI 2014

E3901.3 Ex. No. 2 Refrigerator Branch Circuit

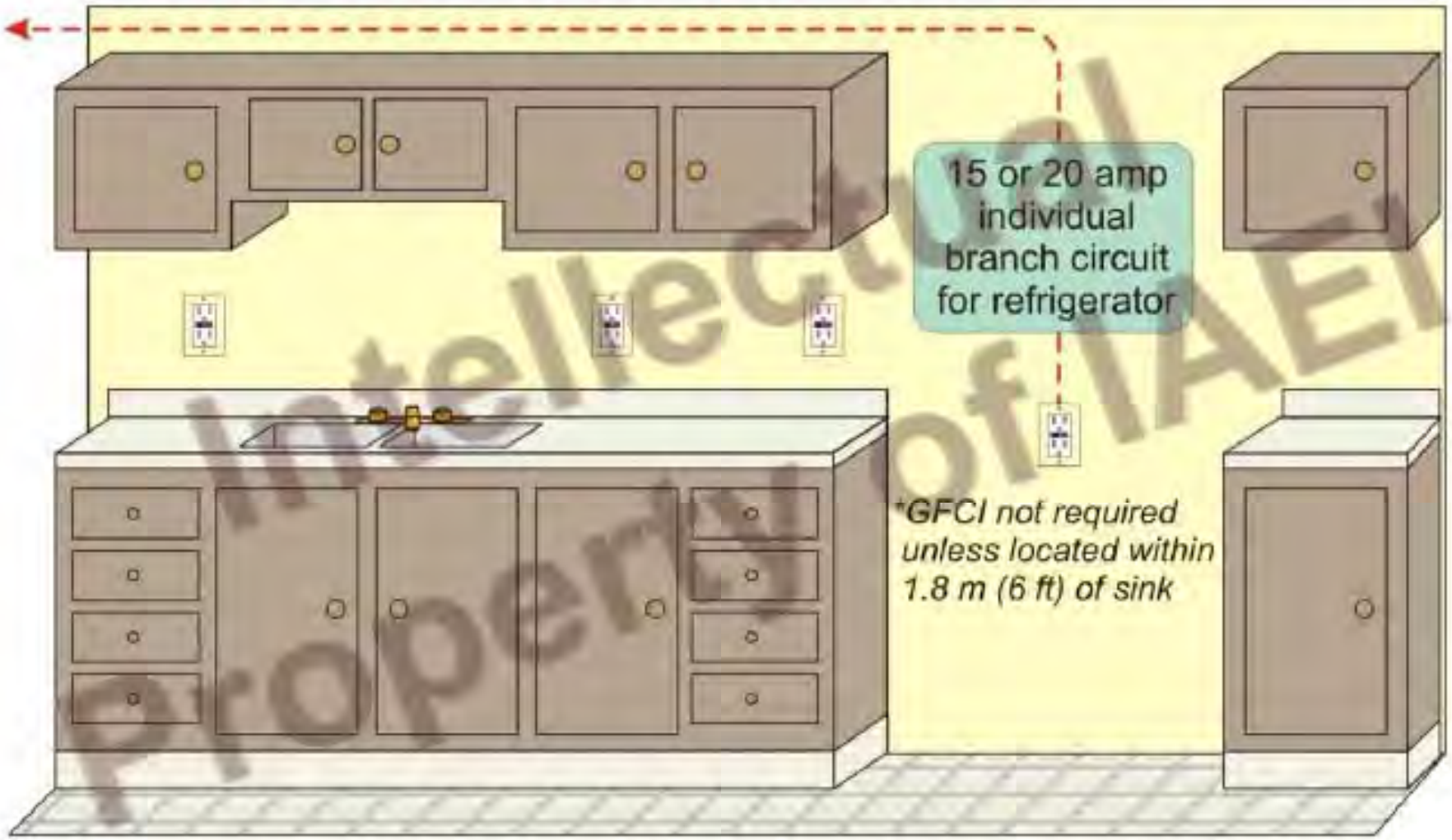

Refrigeration equipment generally required to be served by the two or more 20-ampere small-appliance branch circuits

The receptacle outlet for refrigeration equipment is permitted to be supplied from an individual branch circuit rated 15 amperes or greater

NEC 210.52(B)(1) Ex. No 2

Intellectual Property of IAEI

Copyright ® IAEI 2014

E3901.3.1 Ex. No. 1 & 2 No Other Outlets

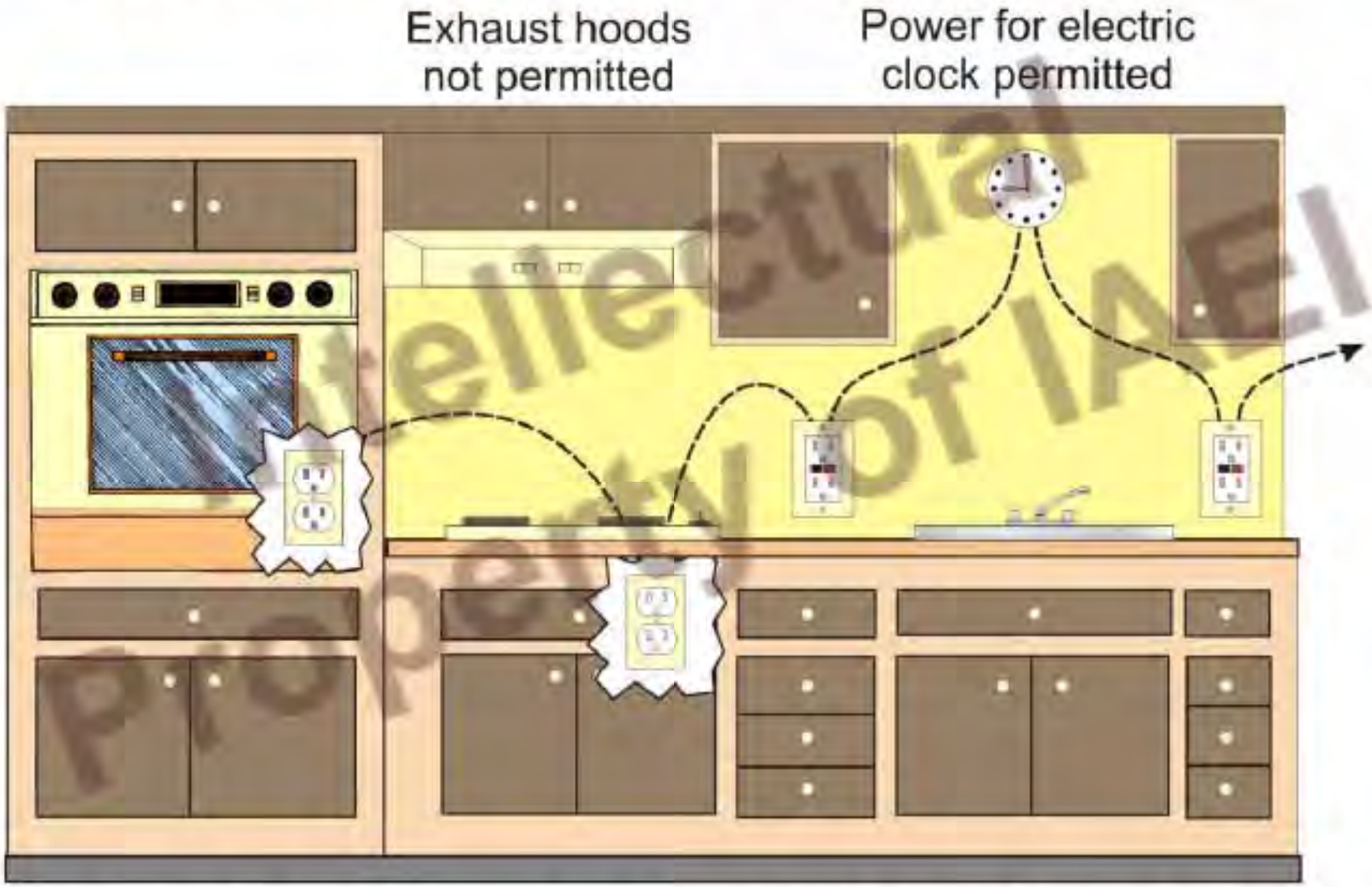

Receptacle(s) for supplemental equipment and lighting for gas-fired ranges, ovens or counter-mounted units permitted on small appliance branch circuits

NEC 210.52(B)(2) Ex. No. 1 & 2

Copyright © IAEI 2014

Intellectual Property of IAEI

E3901.4 Kitchen Receptacles at Counter Spaces

No point on wall countertop spaces more than 600 mm (24 in.) from a receptacle outlet (measured along the backsplash)

Receptacle outlet required for wall space 300 mm (12 in.) or greater

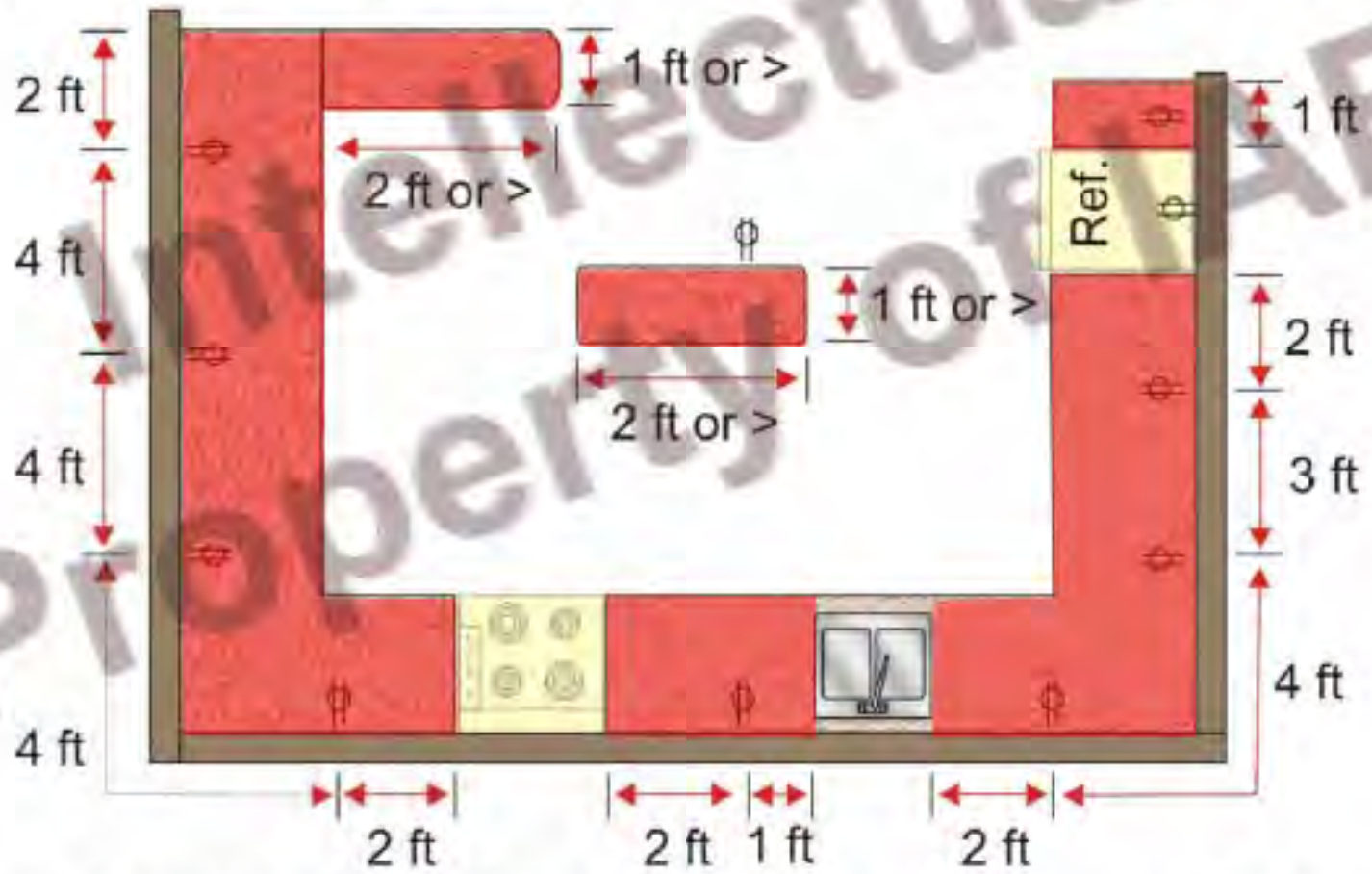

Counter spaces separated by range tops, refrigerators or sinks are considered as a separate counter space *(receptacle outlet(s) required for each space)*

NEC 210.52(C)

Intellectual Property of IAEI

Copyright © IAEI 2014

Figure E3901.4.1 Kitchen Countertop Receptacles

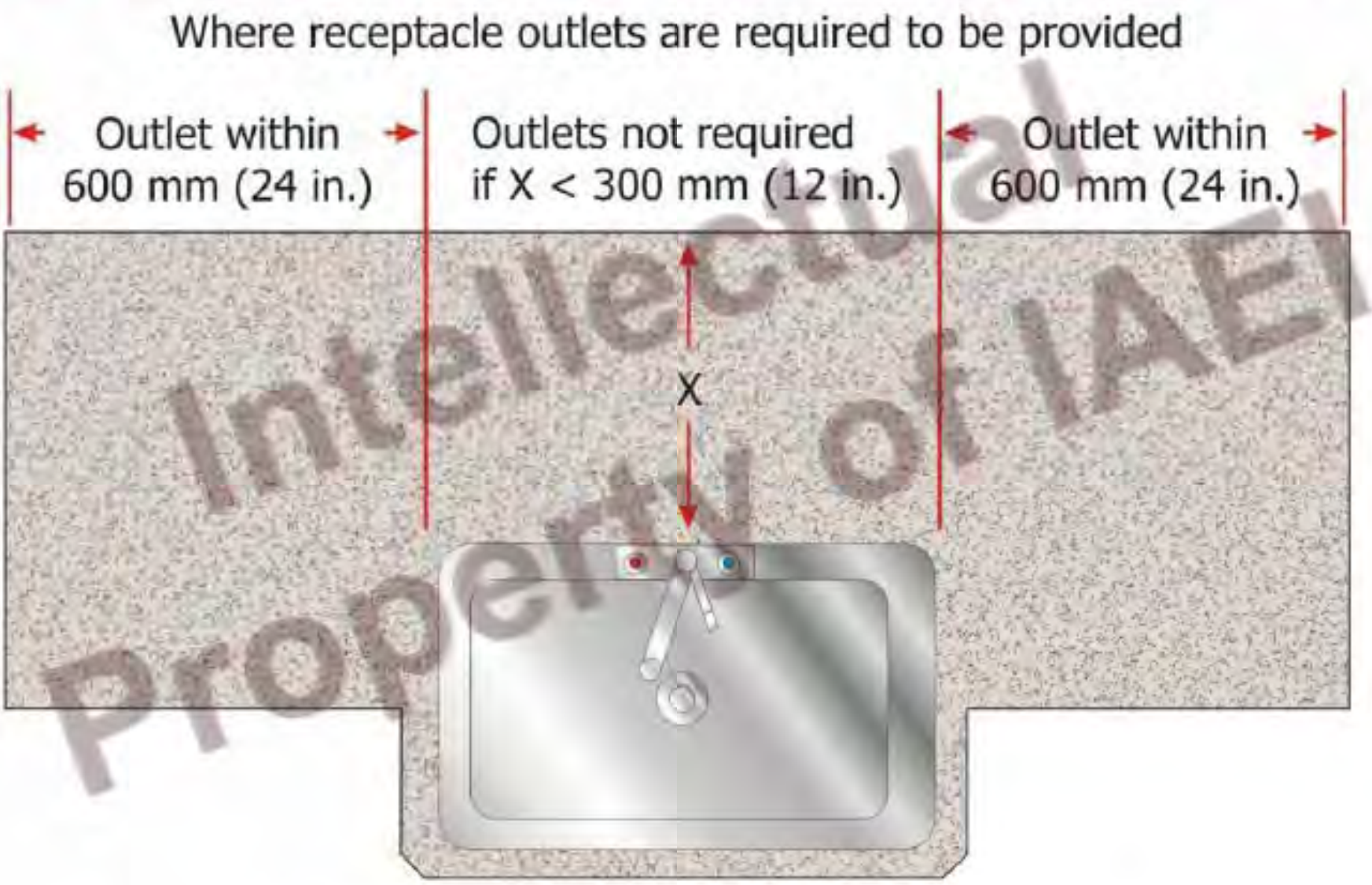

Intellectual Property of IAEI

Copyright © IAEI 2014

NEC Figure 210.52(C)(1)

Figure E3901.4.1 Kitchen Countertop Receptacles

Intellectual Property of IAEI

Copyright © IAEI 2014

NEC Figure 210.52(C)(1)

E3901.4.4 Separate Spaces

Range, counter-mounted cooking units, or sinks create separate spaces

One receptacle required for peninsular and island counter spaces with minimum dimensions as shown

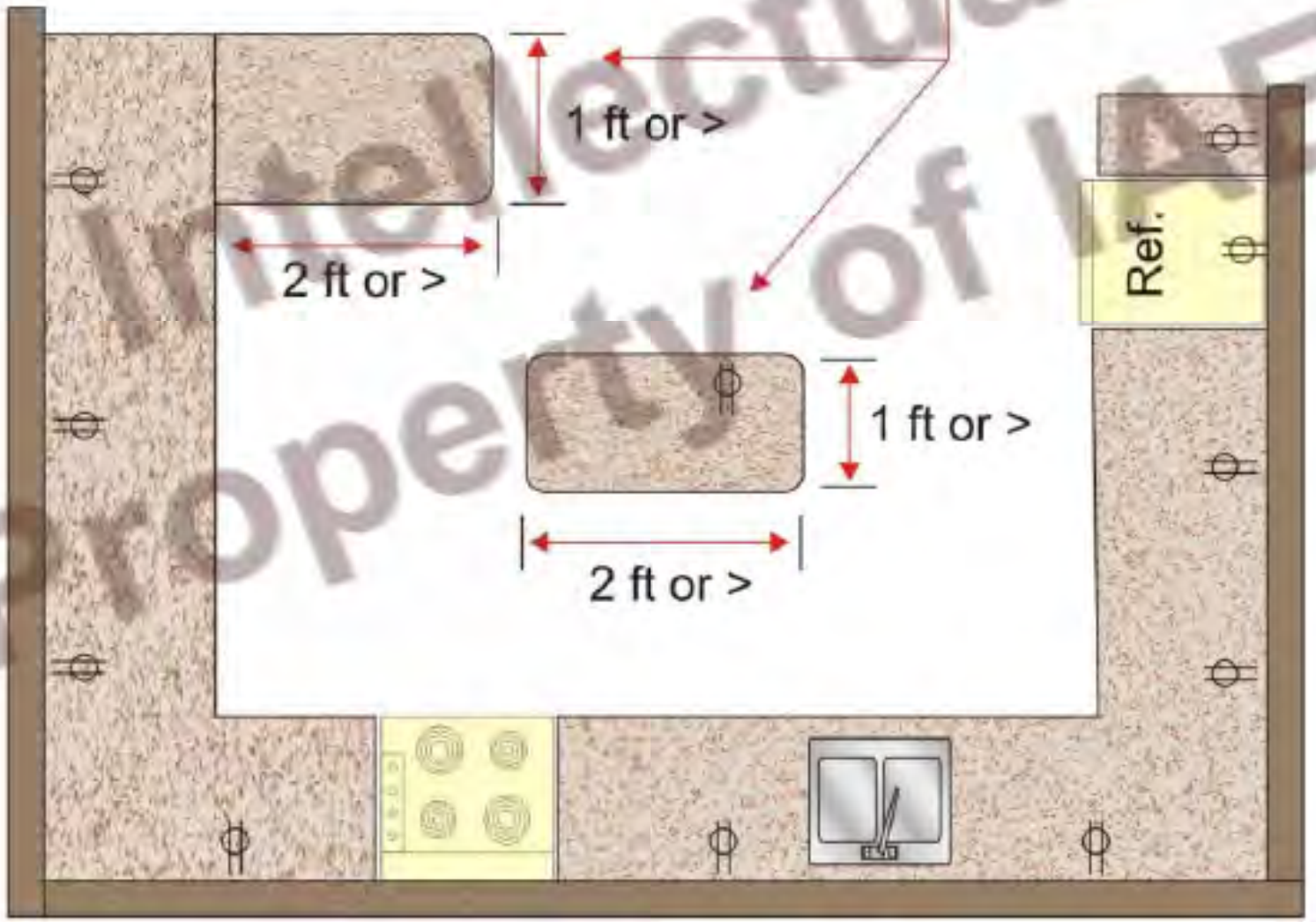

NEC 210.52(C)(4)

Intellectual Property of IAEI

Copyright © IAEI 2014

E3901.4.5 Receptacle Outlet Locations

Maximum 500 mm (20 in.) above countertop surface in order to serve countertop

Not permitted face-up in work surface or countertop

Receptacles NOT to be located below countertop where countertop extends beyond the support base more than 150 mm (6 in.)

Maximum 300 mm (12 in.) below countertop only for:

(1) Construction for the physically impaired

(2) Where island or peninsular countertop is flat across entire surface (no backsplash) and no means for mounting receptacle above countertop within 500 mm (20 in.)

NEC 210.52(C)(5)

Intellectual Property of IAEI

Copyright © IAEI 2014

E3901.4.5 Receptacle Outlet Locations

Receptacle outlets shall be installed on or above the countertops

Not permitted face-up in work surface or countertop

Receptacle outlet assemblies listed for the application shall be permitted to be installed in countertops

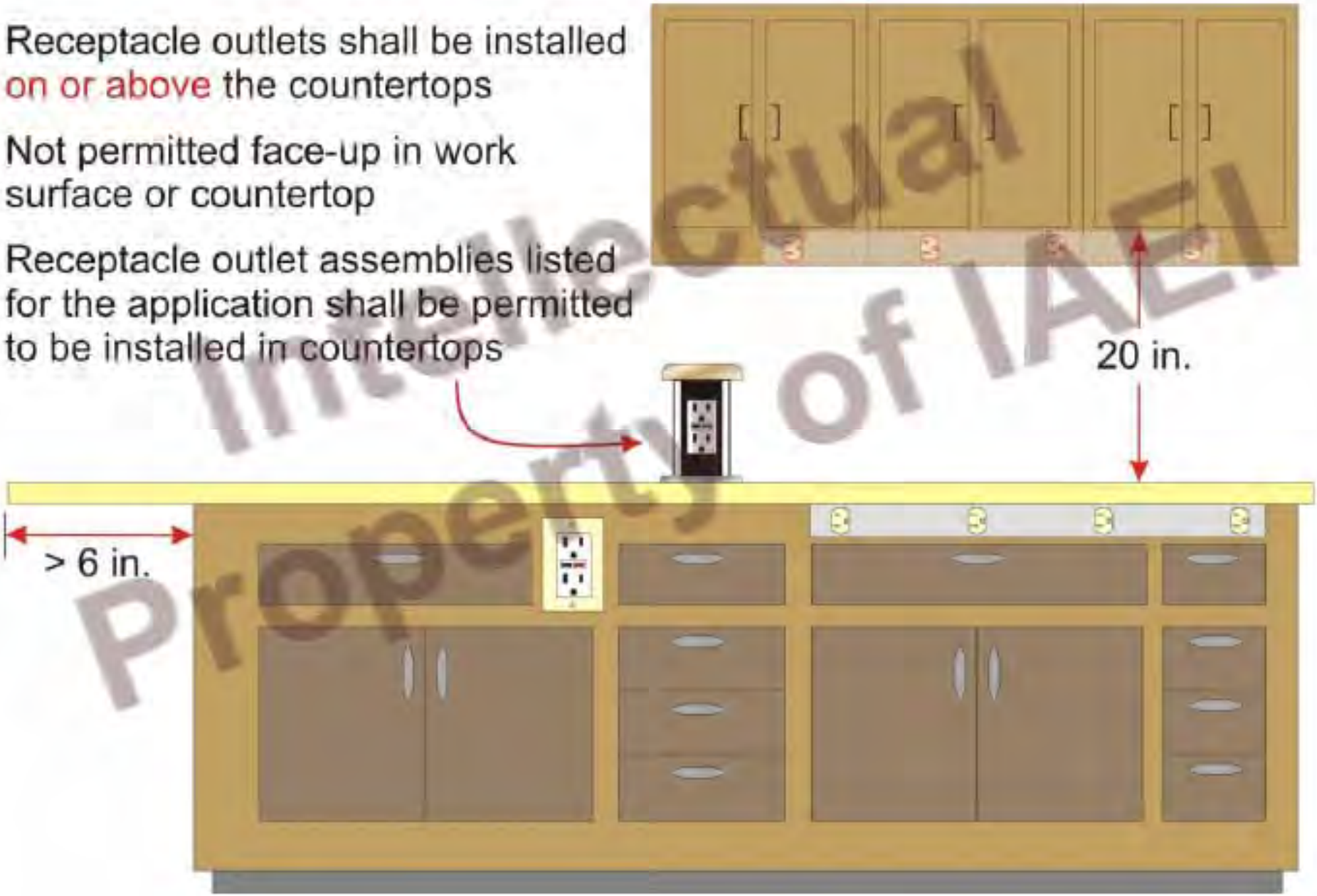

Intellectual Property of IAEI

Copyright © IAEI 2014

NEC 210.52(C)(5)

E3901.6 Bathroom Receptacle Outlet

At least one receptacle outlet to be installed within 900 mm (3 ft) of outside edge of each basin (sink)

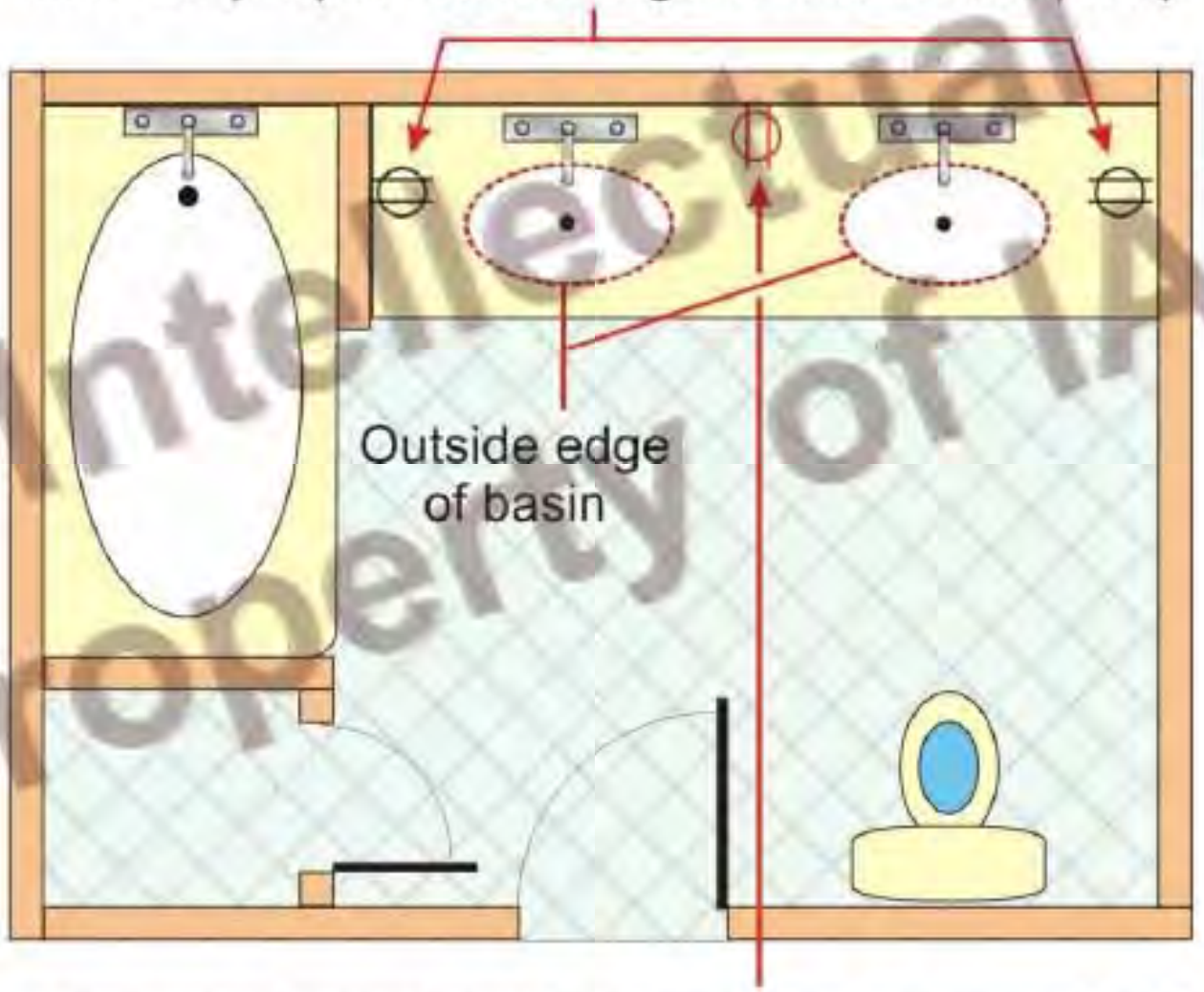

One receptacle centered between the basins and within 900 mm (3 ft) of each basin (sink) is permitted as well

NEC 210.52(D)

Intellectual Property of IAEI

Copyright © IAEI 2014

E3901.6 Bathroom Receptacle Outlet

Receptacle outlet must be located within 900 mm (3 ft) of the outside edge of the basin (sink)

Receptacle outlet permitted on wall or partition adjacent to basin

Receptacle outlet mounted on front or side of vanity can serve as required receptacle outlet if not more than 300 mm (12 in.) below the top of basin

Receptacle outlet assemblies permitted to be installed in the countertop

NEC 210.52(D)

Intellectual Property of IAEI

Copyright © IAEI 2014

E3703.4 Bathroom Branch Circuit

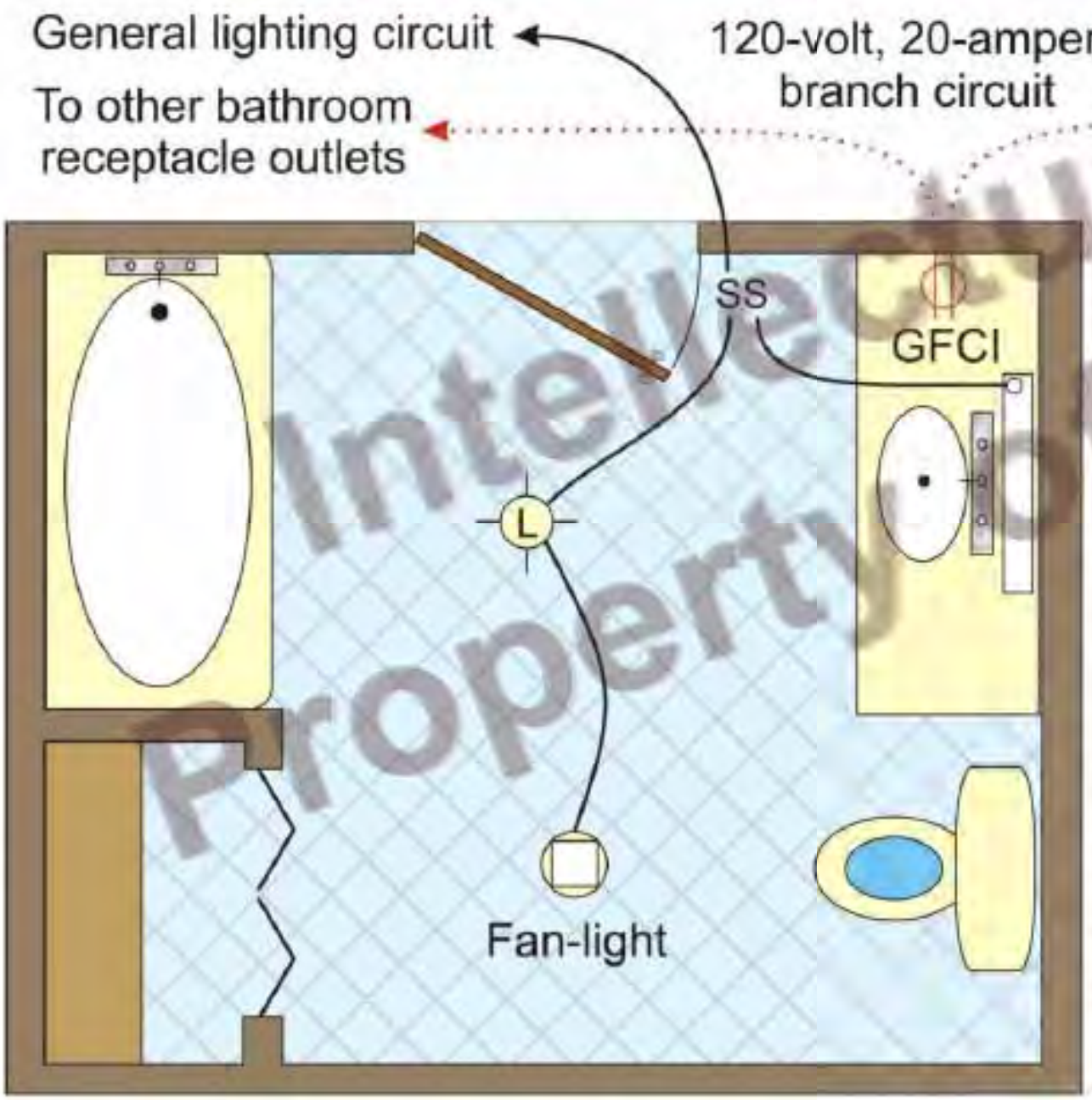

One 120-volt, 20-ampere branch circuit to supply bathroom receptacles

Other outlets not permitted on 20-ampere bathroom receptacle circuit

Exception permits other equipment within the same bathroom to be supplied by the 20-ampere branch circuit where it supplies one bathroom only

NEC 210.11(C)(3)

Intellectual Property of IAEI

Copyright © IAEI 2014

Laundry Circuit and Outlet(s)

- At least one receptacle outlet shall be installed in areas designated for the installation of laundry equipment *(exception for multifamily dwellings with laundry facilities)* [E3901.8]
- A **20-ampere** branch circuit shall be provided to supply the laundry receptacle outlet(s) [E3703.3]
- This circuit shall have **no other outlets**
- Appliance receptacle outlet(s) installed for specific appliances *(such as laundry equipment)* must be installed within 1.8 m **(6 ft)** of the intended location of the appliance [E3901.5]

NEC 210.52(F), 210.11(C)(2), and 210.50(C)

Intellectual Property of IAEI

Copyright © IAEI 2014

E3901.8, E3901.5 Laundry Receptacle Outlet(s)

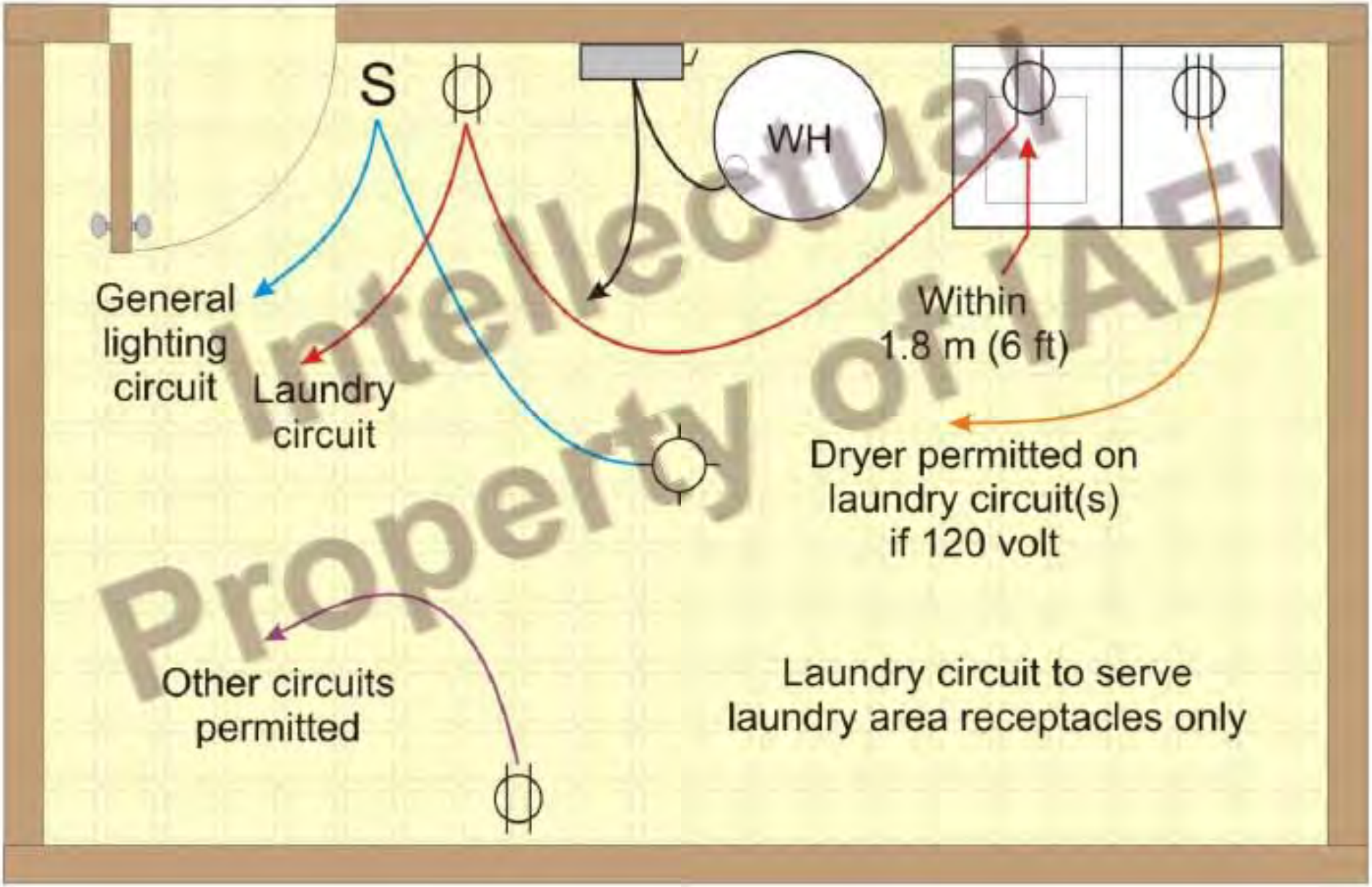

Intellectual Property of IAEI

Copyright © IAEI 2014

NEC 210.52(F), 210.50(C)

E3901.9 Basements, Garages, and Accessory Buildings

- At least one receptacle outlet shall be installed in the areas specified in 210.52(G)(1) through (3)
  - 210.52(G)(1) Garages
  - 210.52(G)(2) Accessory Buildings
  - 201.52(G)(3) Basements
- These receptacles shall be in addition to receptacles required for specific equipment
- Branch circuit supplying garage receptacle(s) **shall not supply outlets outside the garage**
- Receptacle required for **each car space** in a garage
- This is an effort to recognize the possibility of electric vehicle (EV) and plug-in hybrid electric vehicle (PHEV) charging in these garages

NEC 210.52(G)

Intellectual Property of IAEI

Copyright © IAEI 2014

E3901.9 Dwelling Unit Garages

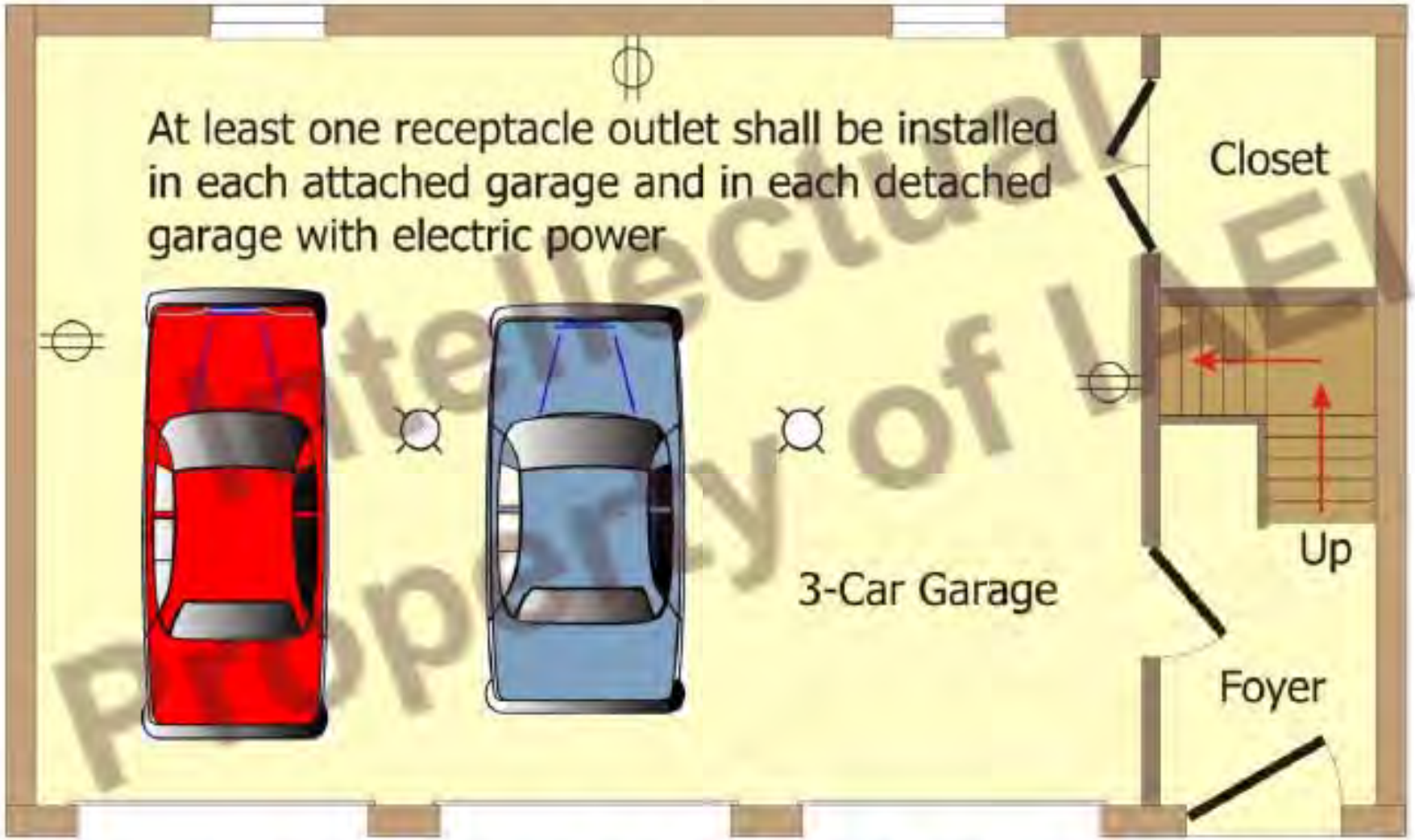

The branch circuit supplying this receptacle(s) shall not supply outlets outside of the garage

At least one receptacle outlet shall be installed for each car space

NEC 210.52(G)(1)

Copyright © IAEI 2014

Intellectual Property of IAEI

Intellectual Property of IAEI

E3901.11 Foyers

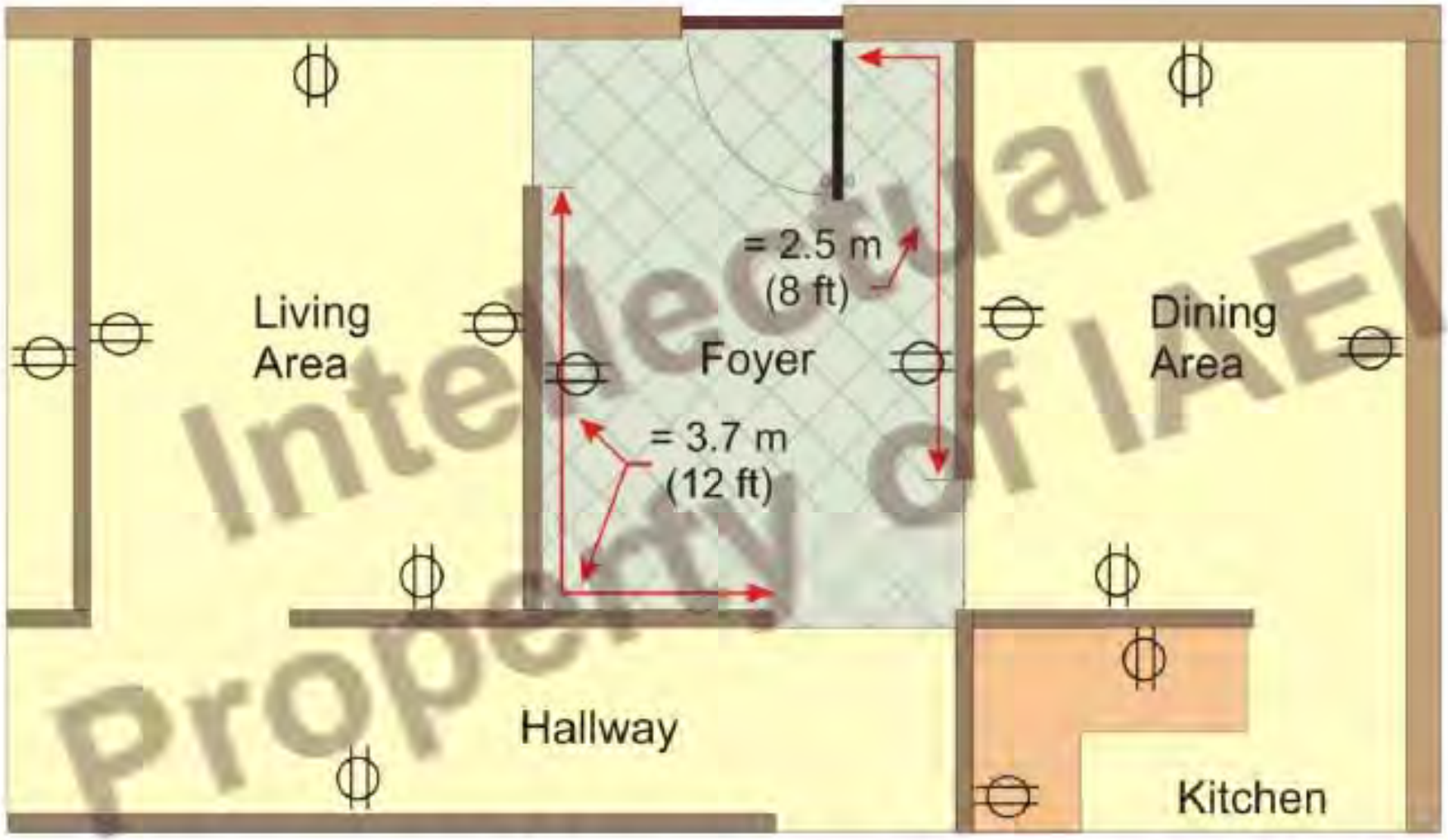

Foyers that are not part of a hallway having an area that is greater than 5.6 m^2 (60 ft^2) are required to have a receptacle(s) located in each wall space 900 mm (3 ft) or more in width

Doorways, door-side windows that extend to the floor, and similar openings shall not be considered wall space

NEC 210.52(I)

Intellectual Property of IAEI

Copyright © IAEI 2014

One- and Two Family Dwelling Electrical Systems – 2015 IRC

ICC Annual Conference- Kansas City, MO

Training Presentation by:

International Association of Electrical Inspectors

Int... Pro... IAEI