IRC - Building

2016 GROUP B PUBLIC COMMENT AGENDA

OCTOBER 19 - OCTOBER 25, 2016
KANSAS CITY CONVENTION CENTER
KANSAS CITY, MO

ICC
INTERNATIONAL CODE COUNCIL®

First Printing

Publication Date: September 2016

PRINTED IN THE U.S.A.

RB1-16

IRC: R106.1.2.1 (New), R202 (New), R703.1.3 (New).

Proposed Change as Submitted

Proponent : Matthew Dobson, Vinyl Siding Institute, representing Vinyl Siding Institute (mdobson@vinylsiding.org)

2015 International Residential Code

Add new text as follows:

R106.1.2.1 Maintenance Documents. Manufacturers' product and system maintenance documents, as required by this code, shall be provided with the *Construction Documents* and included with the Certificate of Occupancy.

Add new definition as follows:

SECTION R202 DEFINITIONS

MAINTENANCE DOCUMENTS. Information that can be a part of larger documents, such as warranty, installation information and construction documents, that describe the necessary maintenance steps for a product or the system durability necessary to ensure projected service life.

Add new text as follows:

R703.1.3 Exterior Wall Covering Maintenance. *Maintenance Documents* are required.

Reason: Durability is such an important aspect of building service life, it is referenced in Section R101.3 of the IRC which explains the intent of the code includes many areas including stability. For many building materials and systems, ongoing maintenance is not only the key to the durability of that component or system, but in many cases can be the key to the durability of the entire structure.

Of course durability starts with proper installation, but in many cases notable building failures are caused by improper maintenance of the materials, including issues relating to rot and mold.

With better communication and understanding of maintenance requirements, we can help to improve to the life and durability of structures.

This simple additional step will move us in the ride direction of this issue and improve the resiliency of homes built under the IRC. According to Building Science Corporation's article, "Increasing the Durability of Constructions" (by Joseph Lstiburek – BSD-144) many building failure issues over the past few decades has to do with durability and proper building maintenance.

Cost Impact: Will increase the cost of construction

Change will increase the cost of construction minimally because of necessary additional information and administrative steps. This change, though, will help with longer lifetime of products and systems.

RB1-16 : R703.1.3 (NEW)-DOBSON13086

Public Hearing Results

Committee Action: **Disapproved**

Committee Reason: While the committee applauds the proponent's effort to educate homeowners regarding the maintenance of their siding and other equipment and materials, this should not be the responsibility of the code official and should never hold up the issuance of a Certificate of Occupancy.

Assembly Action: **None**

Individual Consideration Agenda

Public Comment 1:

Proponent : Matthew Dobson, Vinyl Siding Institute, representing Vinyl Siding Institute (mdobson@vinylsiding.org) requests Approve as Modified by this Public Comment.

Modify as Follows:

2015 International Residential Code

R106.1.2.1 Maintenance Documents. Manufacturers' product and system maintenance documents, as required by this code, shall be provided ~~with the *Construction Documents* and included with the Certificate of Occupancy~~ in a conspicuous location.

SECTION R202 DEFINITIONS

MAINTENANCE DOCUMENTS. Information that can be a part of larger documents, such as warranty, installation information and construction documents, that describe the necessary maintenance steps for a product or the system durability necessary to ensure projected service life.

R703.1.3 Exterior Wall Covering Maintenance. *Maintenance Documents* are required.

Commenter's Reason: This change introduces the concept of maintenance as it relates to durability. Durability is a key aspect for many building products and building systems. Without proper maintenance a building's life can be diminished and leading to less durable and resilient structures. The modification simply requires these maintenance documents, those required by the code, to be left in an obvious spot for the homeowner. Although this practice is typically done in many cases, it's time that the code places an emphasis and creates stronger homeowner responsibility.

RB1-16

RB7-16
IRC: R202 (New).

Proposed Change as Submitted

Proponent : Edward Kulik, representing Building Code Action Committee (bcac@iccsafe.org)

2015 International Residential Code

Add new text as follows:

SECTION R202 DEFINITIONS

DETACHED. For the purposes of Section R101.2, a building that is not attached or fastened to an adjacent building and does not share common building elements with an adjacent building.

Reason: This IRC proposal is intended to clarify:
a) What is meant by "detached" in Section R101.2, Scope
b) What must be done when IRC dwellings are built with zero clearance to lot lines (not just between townhouse dwelling units, but also between one-family dwelling dwellings such as a row house in an urban environment)
c) What happens as townhomes and row houses age and individual units are destroyed by fire and must be replaced
d) What must be done when row houses in an urban setting are demolished and rebuilt

Note that Section R302.1 and its associated tables permit fire resistant construction requirements.

This proposal is submitted by the ICC Building Code Action Committee (BCAC). BCAC was established by the ICC Board of Directors to pursue opportunities to improve and enhance assigned International Codes or portions thereof. In 2014 and 2015 the BCAC has held 5 open meetings. In addition, there were numerous Working Group meetings and conference calls for the current code development cycle, which included members of the committee as well as any interested party to discuss and debate the proposed changes. Related documentation and reports are posted on the BCAC website at: **BCAC** (http://www.iccsafe.org/codes-tech-support/codes/code-development-process/building-code-action-committee-bcac/)

Cost Impact: Will not increase the cost of construction
This proposal is intended as a clarifiation of the current provisions of the IRC; therefore no increase in the cost of construction is expected.

RB7-16 : R202 (NEW)-KULIK11035

Public Hearing Results

Committee Action: **Disapproved**

Committee Reason: There are other items or structures, such as a deck, that could be detached. Common use of the term "detached" and the standard dictionary definition work, making a code specific definition unnecessary.

Assembly Action: **None**

Individual Consideration Agenda

Public Comment 1:

Proponent : Edward Kulik, representing Building Code Action Committee (bcac@iccsafe.org) requests Approve as Modified by this Public Comment.

Modify as Follows:

2015 International Residential Code

SECTION R202 DEFINITIONS

DETACHED. ~~For the purposes of Section R101.2, a~~ A building or structure that is not attached or fastened to an adjacent building or structure and does not share common building or structural elements with an adjacent building or structure.

Commenter's Reason: After discussion during the code hearing the committee passed a modification that would have struck the language "For purposes of Section R101.2" to expand the definition to other structures such as decks regulated by the code. Once that modification was passed it was identified that simply referring to "building" within the definition would not

address other structures and that it was preferred that the proposal come back in a public comment to clean up the expansion. As modified by this public comment the new definition will clarify what a detached building or structure is.

This public comment is submitted by the ICC Building Code Action Committee (BCAC). BCAC was established by the ICC Board of Directors to pursue opportunities to improve and enhance assigned International Codes or portions thereof. Between 2014 and 2016 the BCAC has held 8 open meetings. In addition, there were numerous Working Group meetings and conference calls for the current code development cycle, which included members of the committee as well as any interested party to discuss and debate the proposed public comments. Related documentation and reports are posted on the BCAC website at: BCAC (http://www.iccsafe.org/codes-tech-support/codes/code-development-process/building-code-action-committee-bcac/)

RB7-16

RB10-16
IRC: R202.

Proposed Change as Submitted

Proponent : Stephen Thomas, Colorado Code Consulting, LLC, representing Colorado Chapter ICC (sthomas@coloradocode.net)

2015 International Residential Code

Revise as follows:

SECTION 202 DEFINITIONS

[RB] DWELLING. Any building that contains one or two *dwellingunits* located on a single lot that are used, intended, or designed to be built, used, rented, leased, let or hired out to be occupied, or that are occupied for living purposes.

Reason: There has been confusion regarding the separation between two dwelling units in a two-family dwelling. The code requires a one-hour fire-resistance assembly between the units. However, there is an ICC Committee interpretation (41-03) that states "An attached two-family dwelling with a property line between the two dwelling units is considered two separate buildings, located on two separate lots. Two individual dwellings must comply with the fire separation distance required in Section R302.1". ICC seminars also support this position.
The intent of this proposal is to clarify this requirement by including the language in the definition stating that a two-family dwelling on a single lot would be constructed as a single building and the single one-hour wall would be acceptable. However, if a lot line is placed between the two dwelling units, you would have a dwelling on a separate lot and the exterior walls would need to be protected in accordance with Section 302 as separate buildings. We are just trying to make sure the code reads that way it is intended to read.

Cost Impact: Will increase the cost of construction
For jurisdictions that allow the single one-hour wall when a lot line exists, the additional cost of the two exterior walls will increase the cost of construction. For jurisdictions that enforce the ICC interpretation, there would be no change.

RB10-16 : R202 DWELLING-THOMAS11448

Public Hearing Results

Committee Action: **Disapproved**

Committee Reason: The concept is good, but there will be confusion where there are multiple lots on a development site. There are some requirements in the definition, which is not appropriate. If the proponent reworks the definition, the impact on condominiums should be considered.

Assembly Action: **None**

Individual Consideration Agenda

Proponent : Homer Maiel, PE, representing ICC Tri-Chapter (Peninsula, East Bay, Monterey Bay requests Approve as Submitted.

Commenter's Reason: This is a modification to the definition of dweling code that has been long needed. If a lot line is created between two units, then two units need to be addressed as two separate dwellings with all pertinent code requirements.

RB10-16

RB17-16

IRC: , R301.2, R301.2(3) (New), R301.2(3)-continued (New), R301.2.2.1.1, R301.2.2.1.2.

Proposed Change as Submitted

Proponent : Kelly Cobeen, Wiss Janney Elstner Associates, Inc., representing Federal Emergency Management Agency and National Institute of Building Sciences Building Seismic Safety Council's Code Resource Support Committee (KCobeen@wje.com)

2015 International Residential Code

Delete and substitute as follows:

FIGURE R301.2(2)
SEISMIC DESIGN CATEGORIES~~—SITE CLASS D~~

(Existng code figure not shown for clarity)

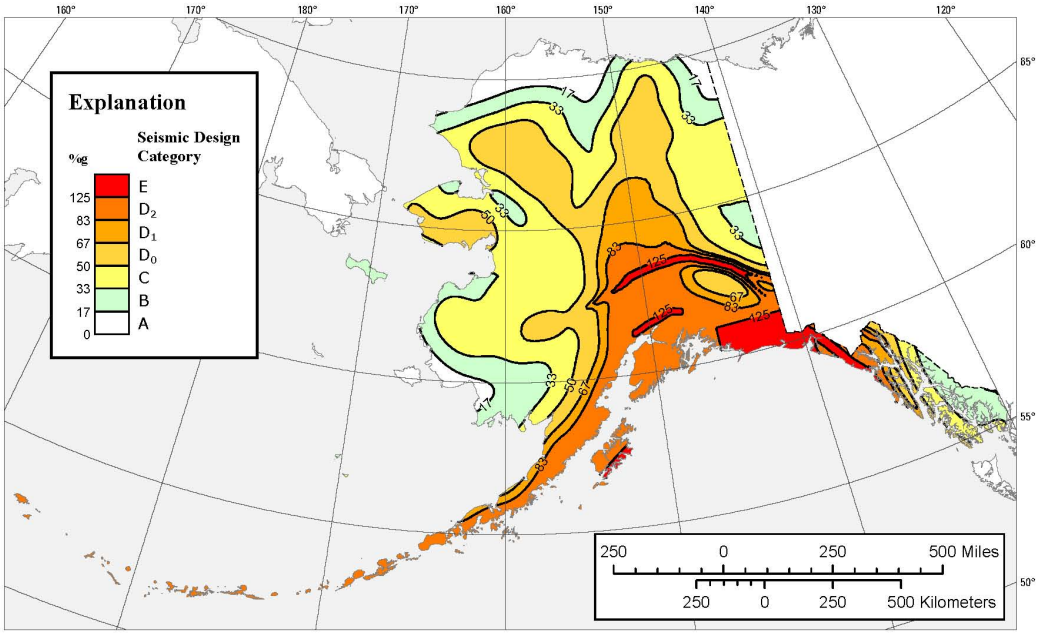

FIGURE R301.2(2) - continued
SEISMIC DESIGN CATEGORIES

FIGURE R301.2(2)-continued
SEISMIC DESIGN CATEGORIES~~—SITE CLASS D~~

(Existng code figure not shown for clarity)

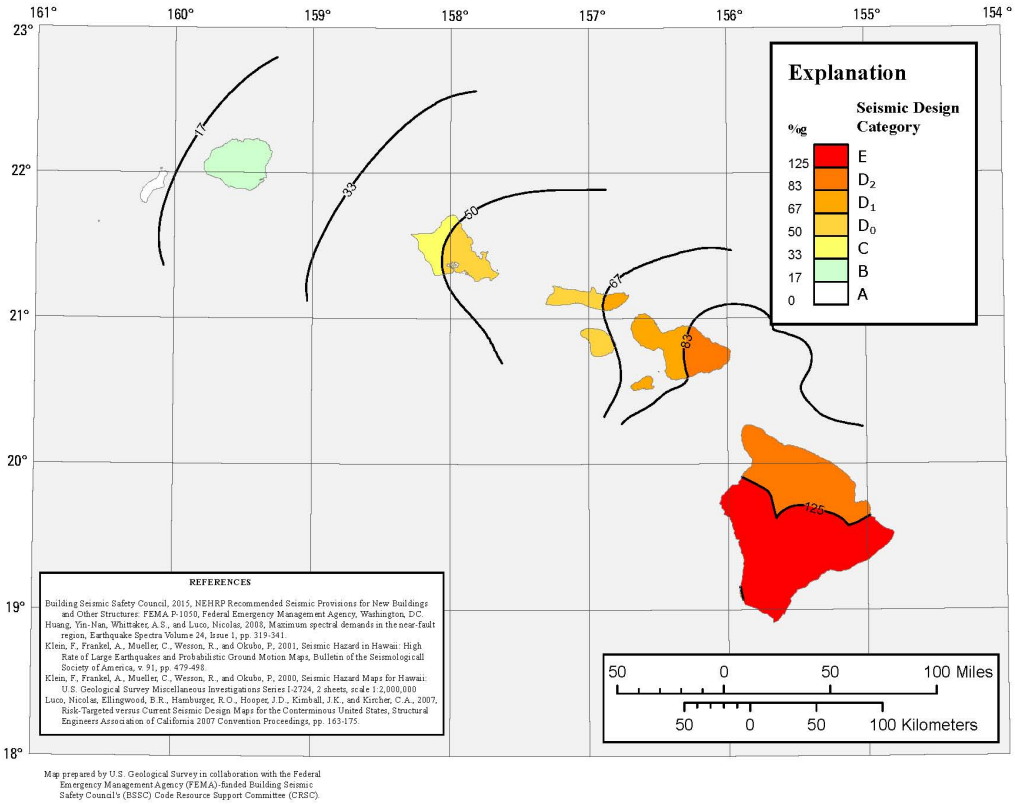

FIGURE R301.2(2) - continued
SEISMIC DESIGN CATEGORIES

–
–

FIGURE R301.2(2)-continued
SEISMIC DESIGN CATEGORIES~~—SITE CLASS D~~

(Existng code figure not shown for clarity)

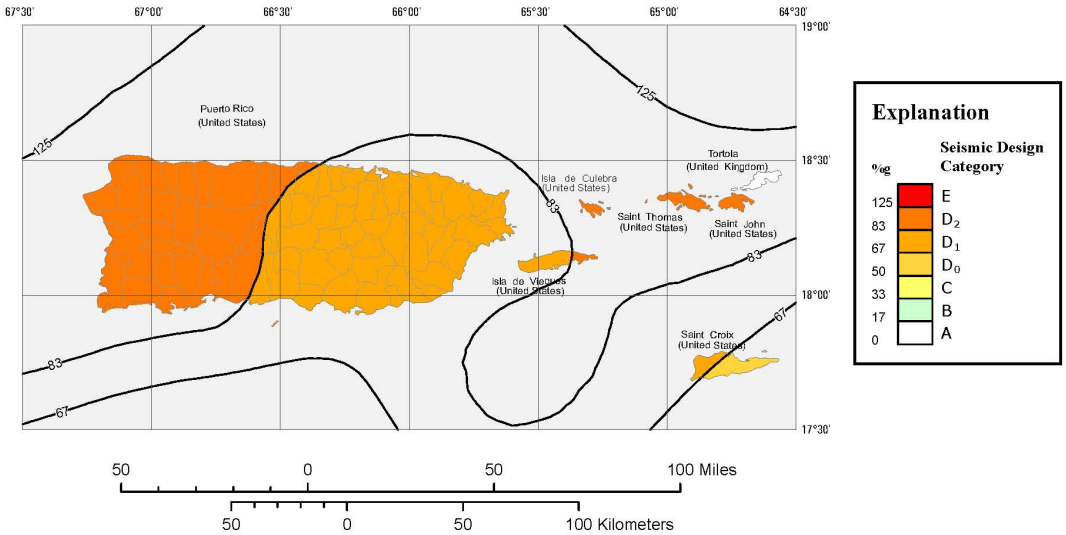

REFERENCES

Building Seismic Safety Council, 2015, NEHRP Recommended Seismic Provisions for New Buildings and Other Structures: FEMA P-1050, Federal Emergency Management Agency, Washington, DC.

Huang, Yin-Nan, Whittaker, A. S., and Luco, Nicolas, 2008, Maximum spectral demands in the near-fault region, Earthquake Spectra Volume 24, Issue 1, pp. 319-341.

Luco, Nicolas, Ellingwood, B.R., Hamburger, R.O., Hooper, J.D., Kimball, J.K., and Kircher, C.A., 2007, Risk-Targeted versus Current Seismic Design Maps for the Conterminous United States, Structural Engineers Association of California 2007 Convention Proceedings, pp. 163-175.

Mueller, C., Frankel, A., Petersen, M., and Leyendecker, E., 2003, Documentation for 2003 USGS Seismic Hazard Maps for Puerto Rico and the U.S. Virgin Islands, U.S. Geological Survey Open-File Report 03-379.

Map prepared by U.S. Geological Survey in collaboration with the Federal Emergency Management Agency (FEMA)-funded Building Seismic Safety Council's (BSSC) Code Resource Support Committee (CRSC).

FIGURE R301.2(2) - continued
SEISMIC DESIGN CATEGORIES

FIGURE R301.2(2)-continued
SEISMIC DESIGN CATEGORIES—~~SITE CLASS D~~

(Existng code figure not shown for clarity)

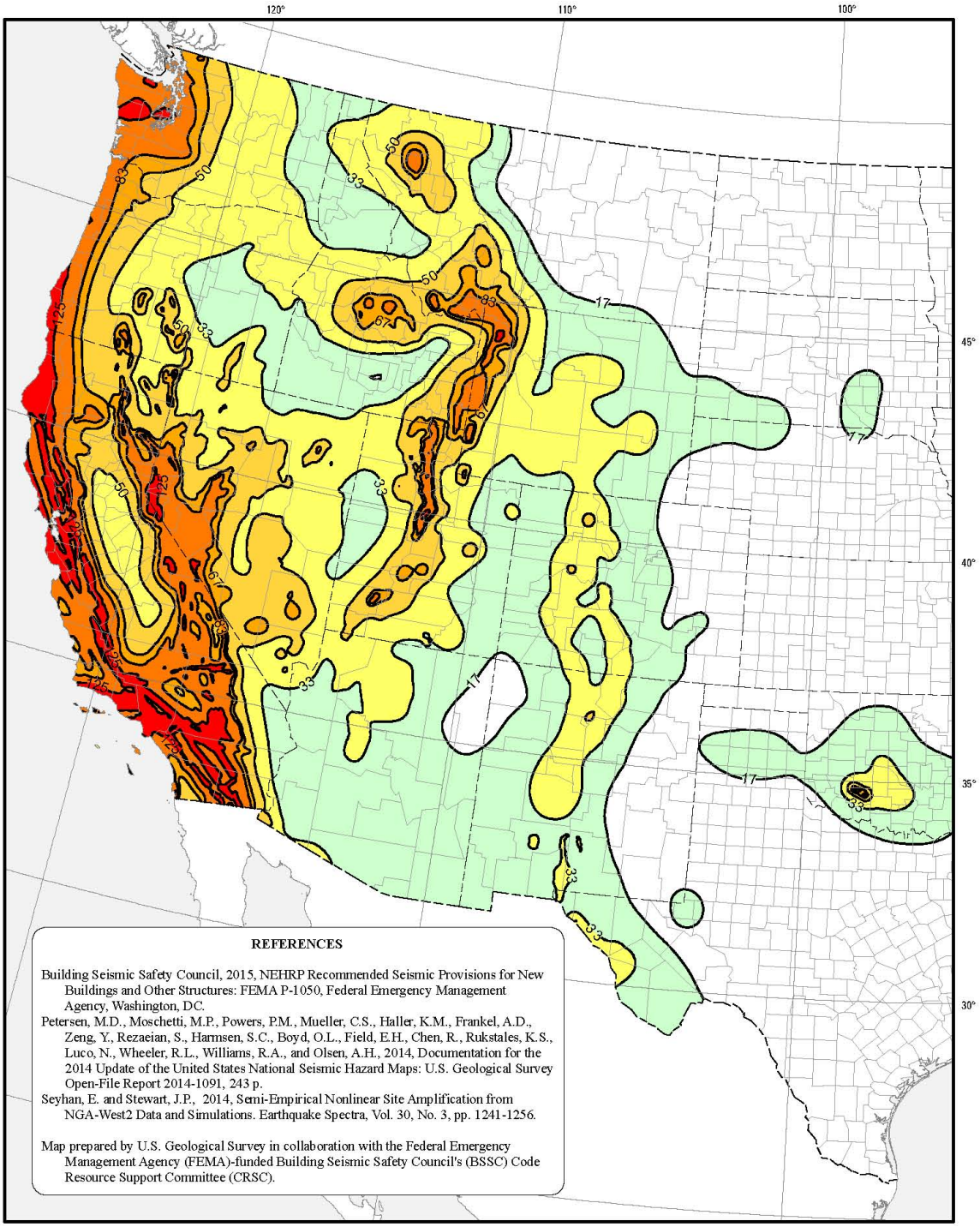

FIGURE R301.2(2)
SEISMIC DESIGN CATEGORIES

FIGURE R301.2(2)-continued
SEISMIC DESIGN CATEGORIES—~~SITE CLASS D~~

(Existng code figure not shown for clarity)

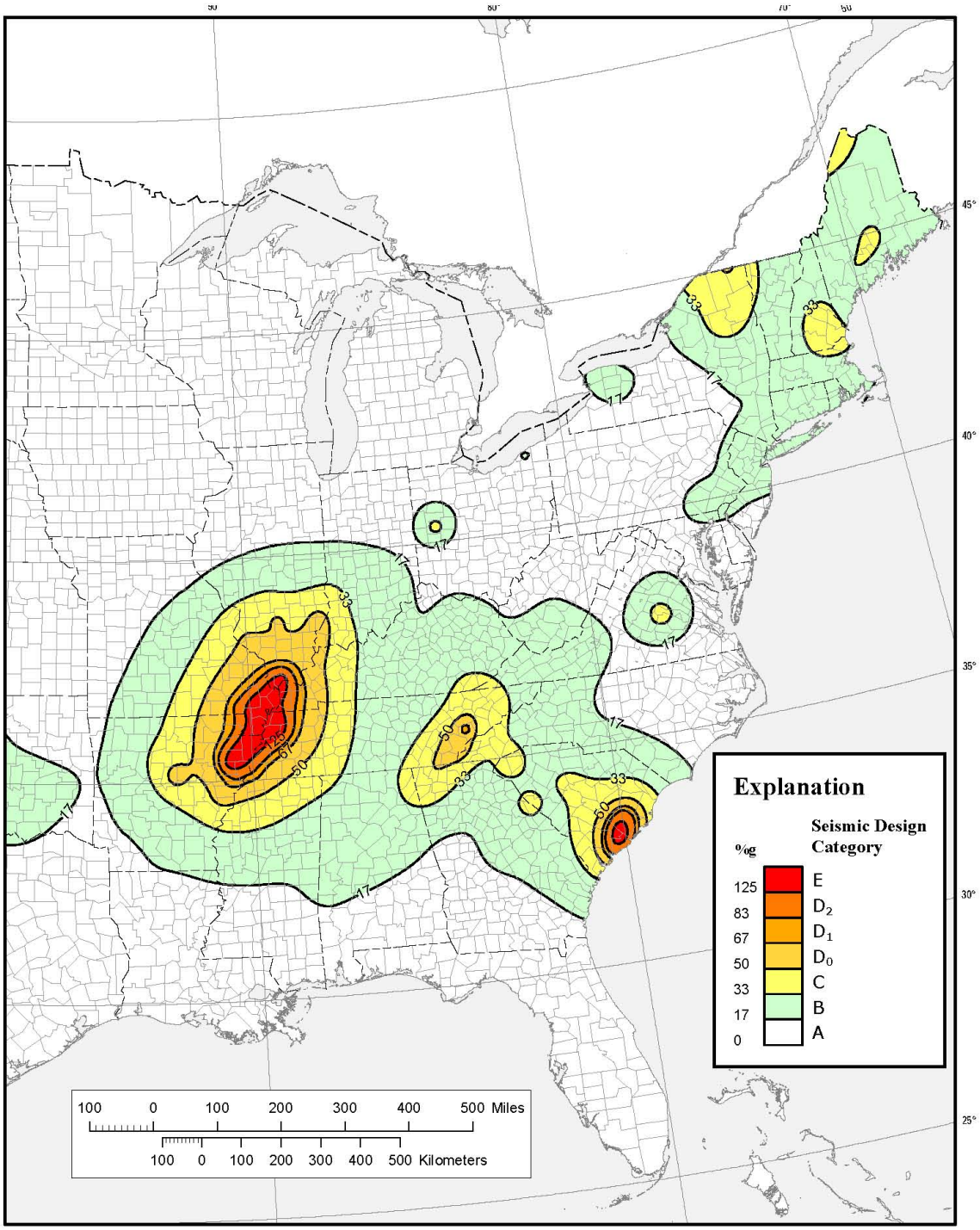

FIGURE R301.2(2) - continued
SEISMIC DESIGN CATEGORIES

Revise as follows:

R301.2.2.1.1 Alternate determination of seismic design category. The seismic design categories and corresponding short-period design spectral response accelerations, S_{DS}, shown in Figure R301.2(2) are based on soil Site Class D, used as an assumed default, as defined in Section 1613.3.2 of the *International Building Code*. If soil conditions are ~~other than~~ determined by the building official to be Site Class A, B, or D, the ~~shortperiod~~ seismic design cateogory and short-period design spectral

response accelerations, S_{DS}, for a site ~~can~~ shall be allowed to be determined in accordance with Figure R301.2(3) or Section 1613.3 of the International Building Code. The value of S_{DS} determined in accordance with Section 1613.3 of the International Building Code is permitted to be used to set the seismic design category in accordance with Table R301.2.2.1.1, and to interpolate between values in Tables R602.10.3(3), R603.9.2(1) and other seismic design requirements of this code.

R301.2.2.1.2 Alternative determination of Seismic Design Category E. Buildings located in Seismic Design Category E in accordance with Figure R301.2(2) , or Figure R301.2(3) where applicable, are permitted to be reclassified as being in Seismic Design Category D_2 provided that one of the following is done:

1. A more detailed evaluation of the seismic design category is made in accordance with the provisions and maps of the *International Building Code*. Buildings located in Seismic Design Category E in accordance with Table R301.2.2.1.1, but located in Seismic Design Category D in accordance with the *International Building Code*, shall be permitted to be designed using the Seismic Design Category D_2 requirements of this code.
2. Buildings located in Seismic Design Category E that conform to the following additional restrictions are permitted to be constructed in accordance with the provisions for Seismic Design Category D_2 of this code:
   - 2.1. All exterior shear wall lines or *braced wall panels* are in one plane vertically from the foundation to the uppermost *story*.
   - 2.2. Floors shall not cantilever past the *exterior walls*.
   - 2.3. The building is within the requirements of Section R301.2.2.2.5 for being considered as regular.

Add new text as follows:

FIGURE R301.2(3)
Alternate Seismic Design Categories

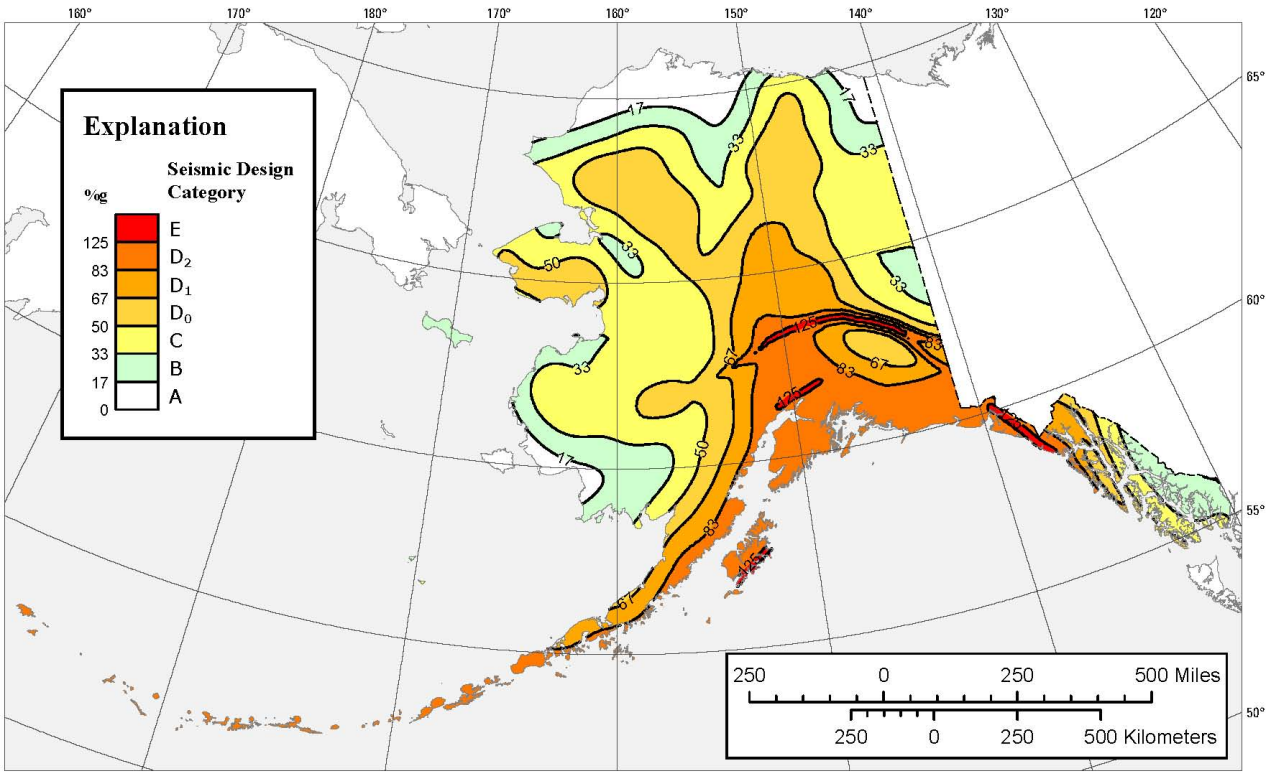

Map prepared by U.S. Geological Survey in collaboration with the Federal Emergency Management Agency (FEMA)-funded Building Seismic Safety Council's (BSSC) Code Resource Support Committee (CRSC).

REFERENCES

Building Seismic Safety Council, 2009, NEHRP Recommended Provisions for Seismic Regulations for New Buildings and Other Structures: FEMA P750/2009 Edition, Federal Emergency Management Agency, Washington, DC

Huang, Yin-Nan, Whittaker, A.S., and Luco, Nicolas, 2008, Maximum spectral demands in the near-fault region, Earthquake Spectra Volume 24, Issue 1, pp. 319-341.

Luco, Nicolas, Ellingwood, B.R., Hamburger, R.O., Hooper, J.D., Kimball, J.K., and Kircher, C.A., 2007, Risk-Targeted versus Current Seismic Design Maps for the Conterminous United States, Structural Engineers Association of California 2007 Convention Proceedings, pp. 163-175.

Wesson, Robert L., Boyd, Oliver S., Mueller, Charles S., Bufe, Charles G., Frankel, Arthur D., Petersen, Mark D., 2007, Revision of time-Independent probabilistic seismic hazard maps for Alaska: U.S. Geological Survey Open-File Report 2007-1043.

FIGURE R301.2(3)-continued
Alternate Seismic Design Categories

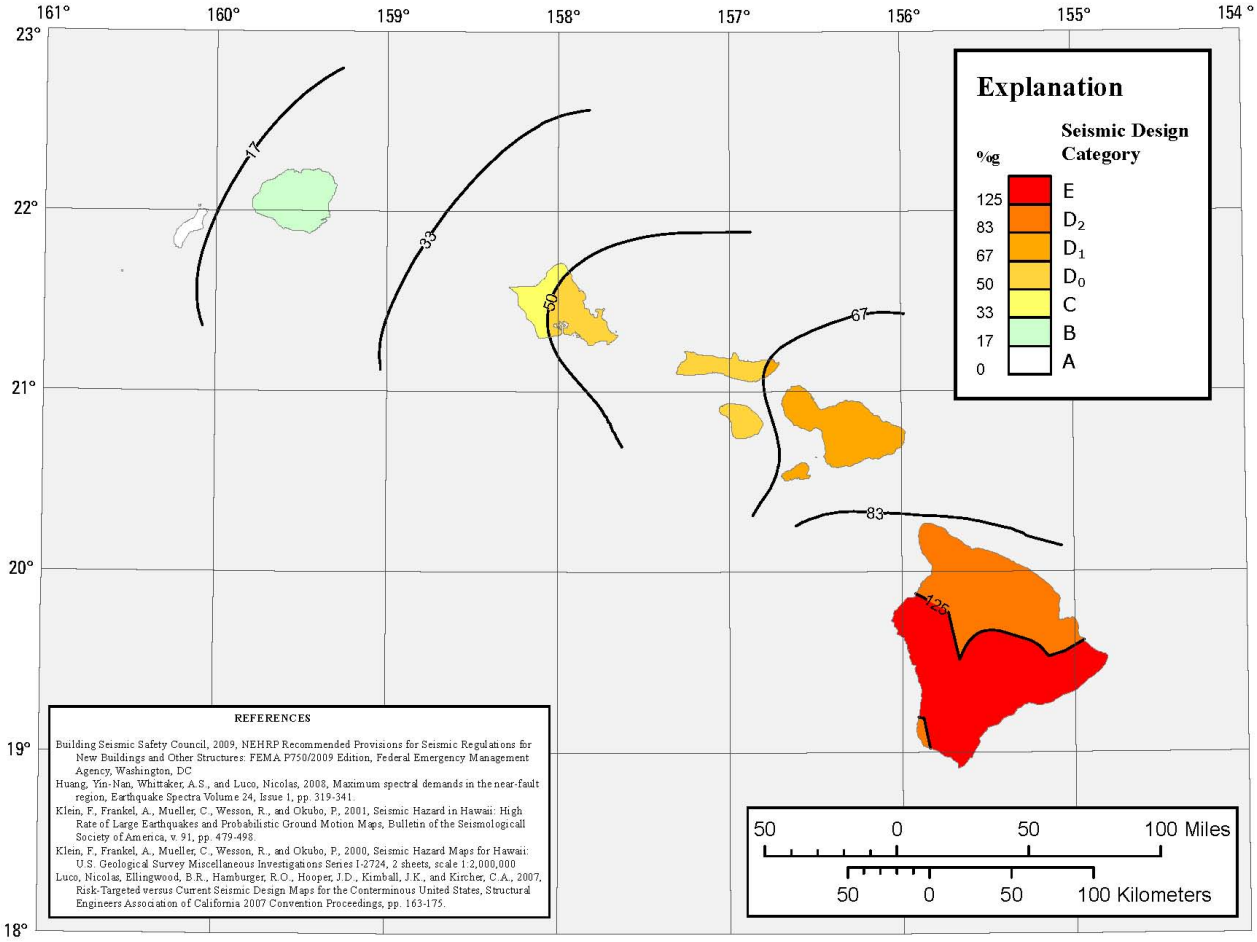

FIGURE R301.2(3)-continued
Alternate Seismic Design Categories

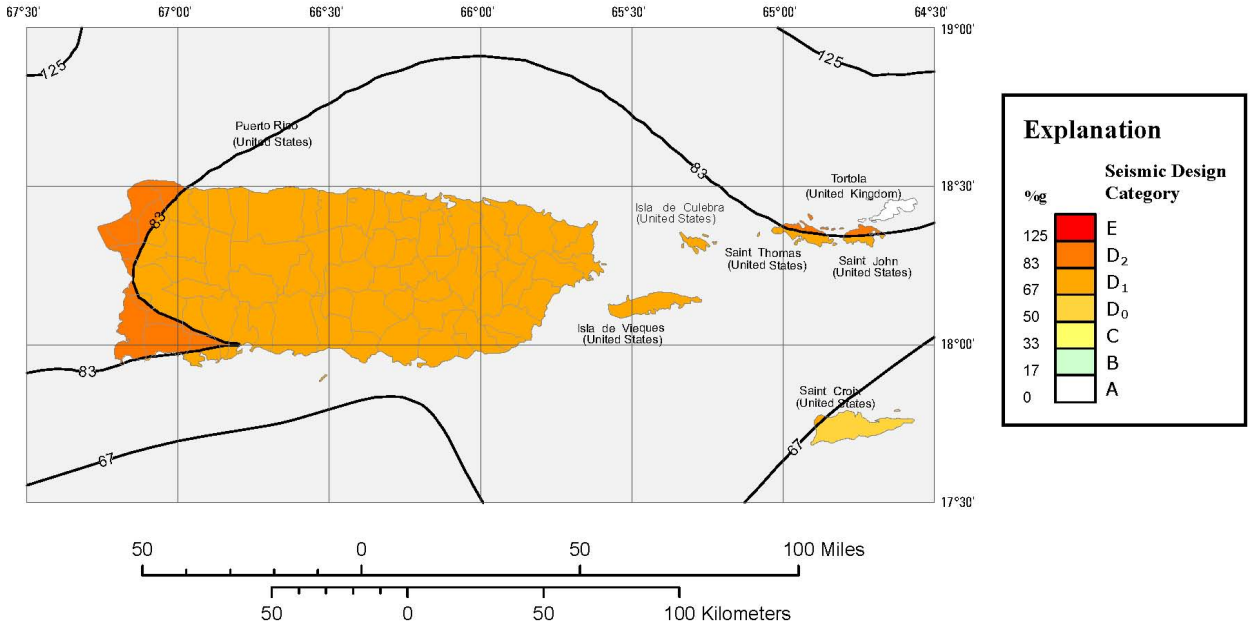

REFERENCES

Building Seismic Safety Council, 2009, NEHRP Recommended Provisions for Seismic Regulations for New Buildings and Other Structures: FEMA P750/2009 Edition, Federal Emergency Management Agency, Washington, DC

Huang, Yin-Nan, Whittaker, A.S., and Luco, Nicolas, 2008, Maximum spectral demands in the near-fault region, Earthquake Spectra Volume 24, Issue 1, pp. 319-341.

Luco, Nicolas, Ellingwood, B.R., Hamburger, R.O., Hooper, J.D., Kimball, J.K., and Kircher, C.A., 2007, Risk-Targeted versus Current Seismic Design Maps for the Conterminous United States, Structural Engineers Association of California 2007 Convention Proceedings, pp. 163-175.

Mueller, C., Frankel, A., Petersen, M., and Leyendecker, E., 2003, Documentation for 2003 USGS Seismic Hazard Maps for Puerto Rico and the U.S. Virgin Islands, U.S. Geological Survey Open-File Report 03-379.

Map prepared by U.S. Geological Survey in collaboration with the Federal Emergency Management Agency (FEMA)-funded Building Seismic Safety Council's (BSSC) Code Resource Support Committee (CRSC).

FIGURE R301.2(3)-continued
Alternate Seismic Design Categories

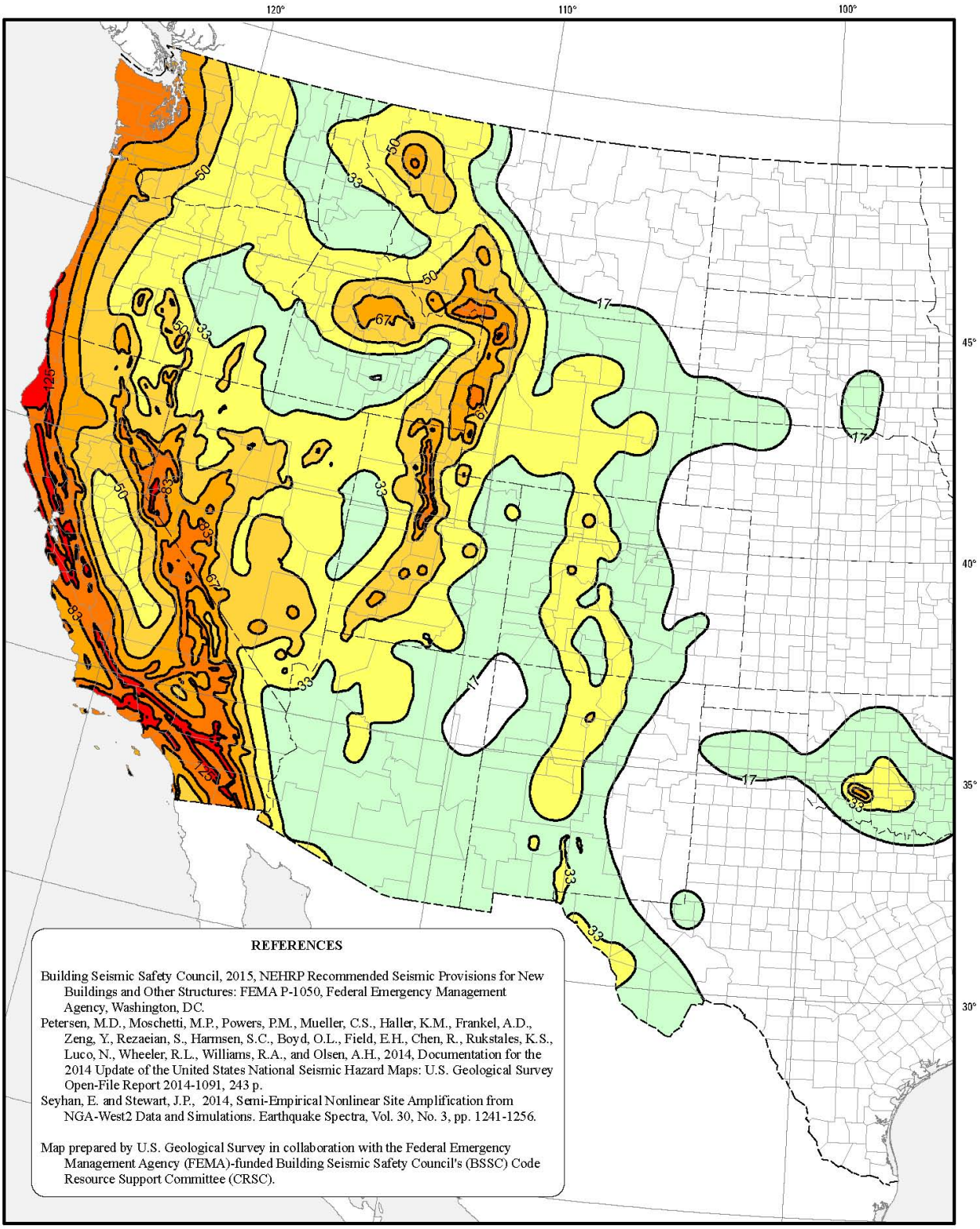

FIGURE R301.2(3)-continued
Alternate Seismic Design Categories

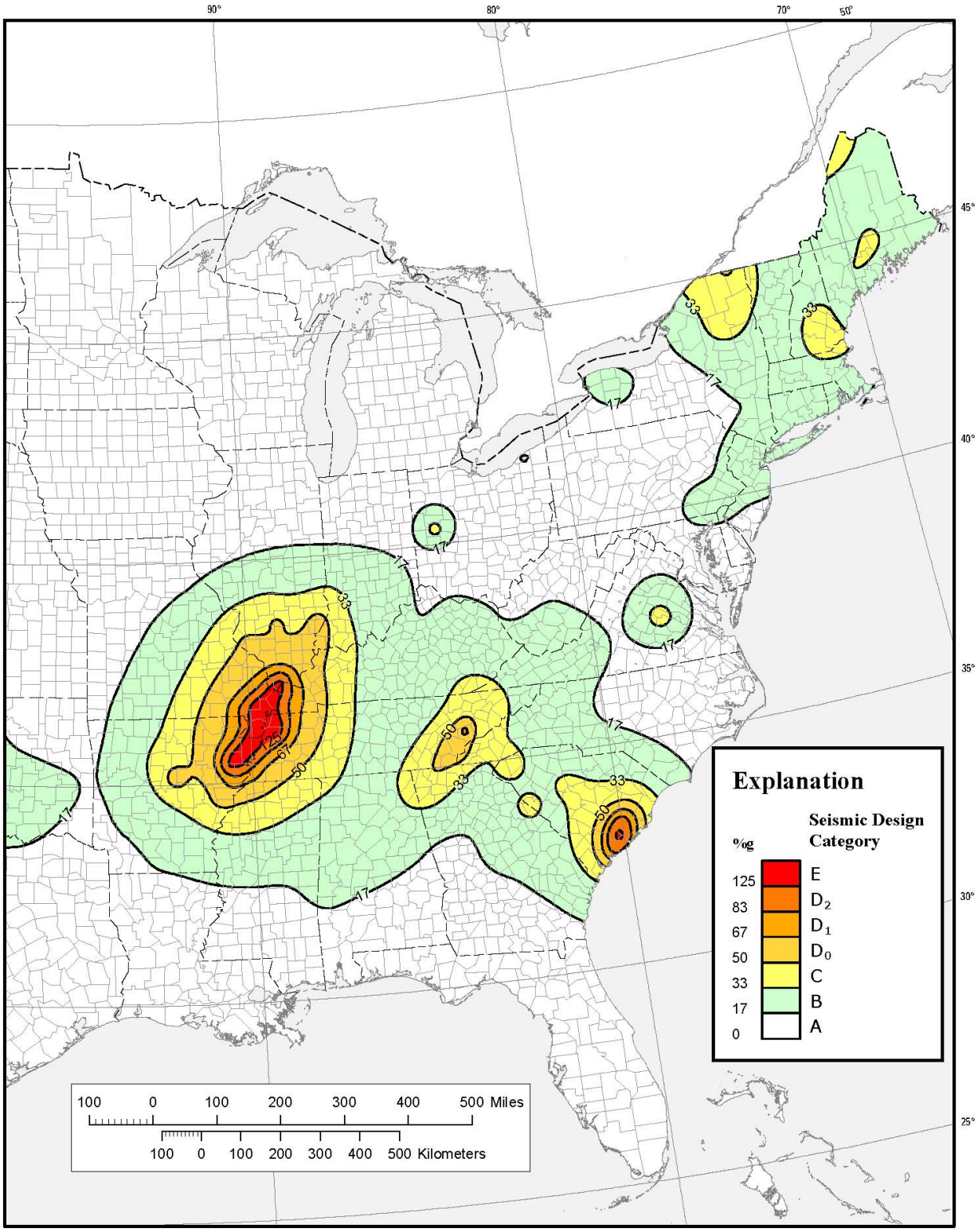

Reason: This proposal incorporates the most current seismic design maps prepared by the U.S. Geological Survey (USGS) in collaboration with the Federal Emergency Management Agency (FEMA) and the Building Seismic Safety Council (BSSC). A separate coordinated code change updates the seismic design maps in the IBC to be consistent with these IRC maps and the maps incorporated into ASCE 7-16. In addition to incorporating updated information on faults and ground motion attenuation, these maps incorporate revisions to site coefficients F_a and F_v. Technical reasons behind the revisions are documented in FEMA P-1050-1, 2015 Edition, Sections C11.4.2 (site classes), C11.4.3 (site coefficients), and C22 (seismic maps). Further documentation is provided in Seyhan and Stewart (2012, 2014) and Luco et al. (2015). As excerpted from FEMA P-1050-1, 2015 Edition, Section C11.4.3: "Motivation for the revisions to these site factors includes (Seyhan and Stewart, 2012): (1)

updating the reference site condition used for the factors to match the condition on the national maps, which in V_S=760 m/s (2500 ft/s); (2) incorporating into the factors the substantial knowledge gains (stemming in large part from an enormous increase in available data) on site response over the past two decades."

As in past versions, the IRC seismic design maps directly indicate Seismic Design Category for a given location. Development of the maps in the past incorporated a default assumption of a Site (soil) Class D, which provided the most conservative assignment of Seismic Design Category. For this update, (1) changes made to the site coefficients resulted in Site Class D no longer being the most critical site class at all spectral response acceleration levels, and (2) spectral response accelerations and resulting Seismic Design Categories increased at a number of locations when the most critical site coefficients were used. Because of these two effects, it is proposed that two sets of maps be adopted into the IRC. The updated R301.2(2) Seismic Design Category maps will provide the most conservative assignment of Seismic Design Category and can be used with any site/soil type within the limits of current IRC provisions. The new R301.2(3) Alternate Seismic Design Category maps will provide less conservative assignments of Seismic Design Category, permitted to be used when it can be determined that Site Class A, B or D is applicable. The building official may make a determination that use of the alternate maps is permitted, provided adequate information is available to determine site class, either on a community-wide basis or site-by-site basis. As in the past, alternate determination in accordance with the IBC is still permitted.

Maps have been developed by USGS to illustrate locations where Seismic Design Categories increase and decrease when comparing the 2015 IRC maps to the R301.2(2) default maps. These are included as an attachment to this code change proposal. Seyhan and Stewart (2014) and Luco et al. (2015) provide discussion of maps changes at some speicific locations, including a region near Charleston, South Carolina where Seismic Design Category increased from D_2 to E. This increase is due to changes in both site coefficients and mapped ground motions, the latter due to an improved earthquake source model for the Central and Eastern United States developed through a three and one-half year collaboration of approximately 35 experts (http://www.ceus-ssc.com).

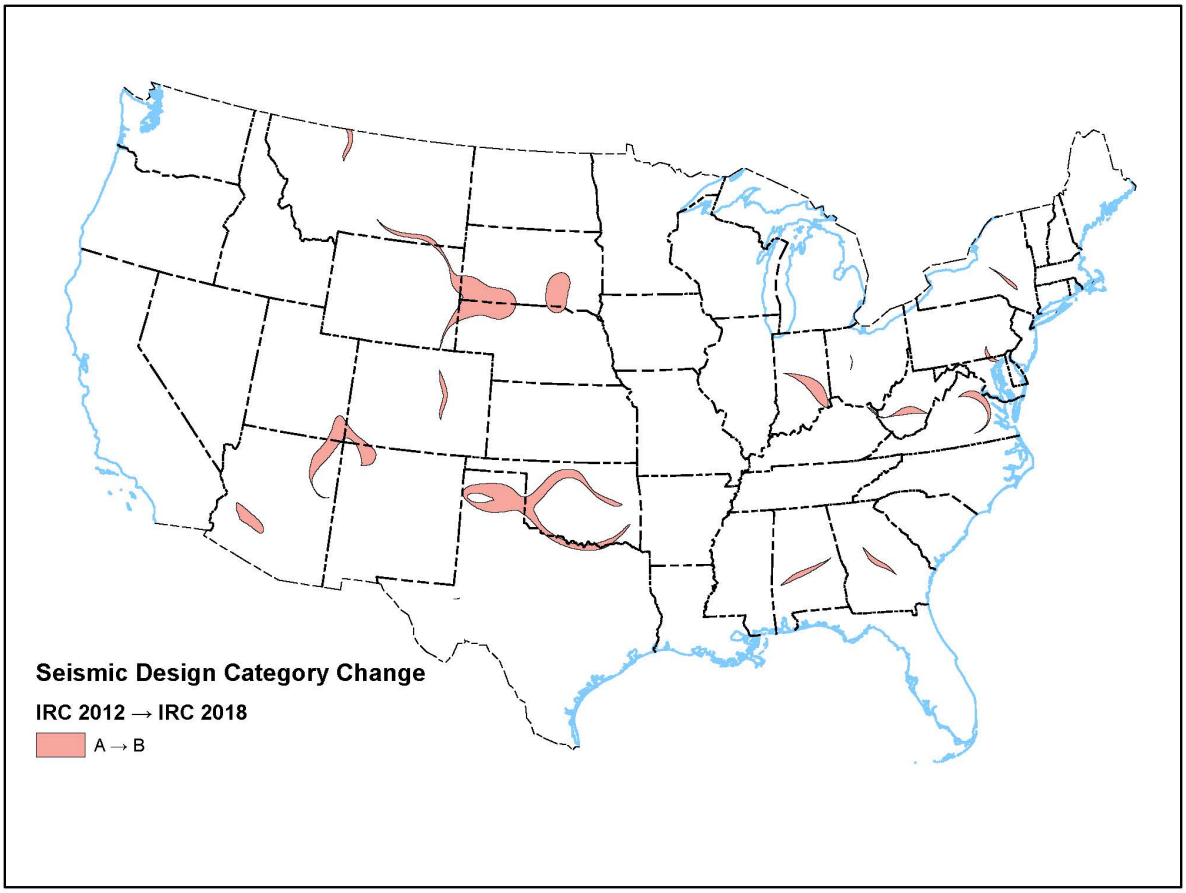

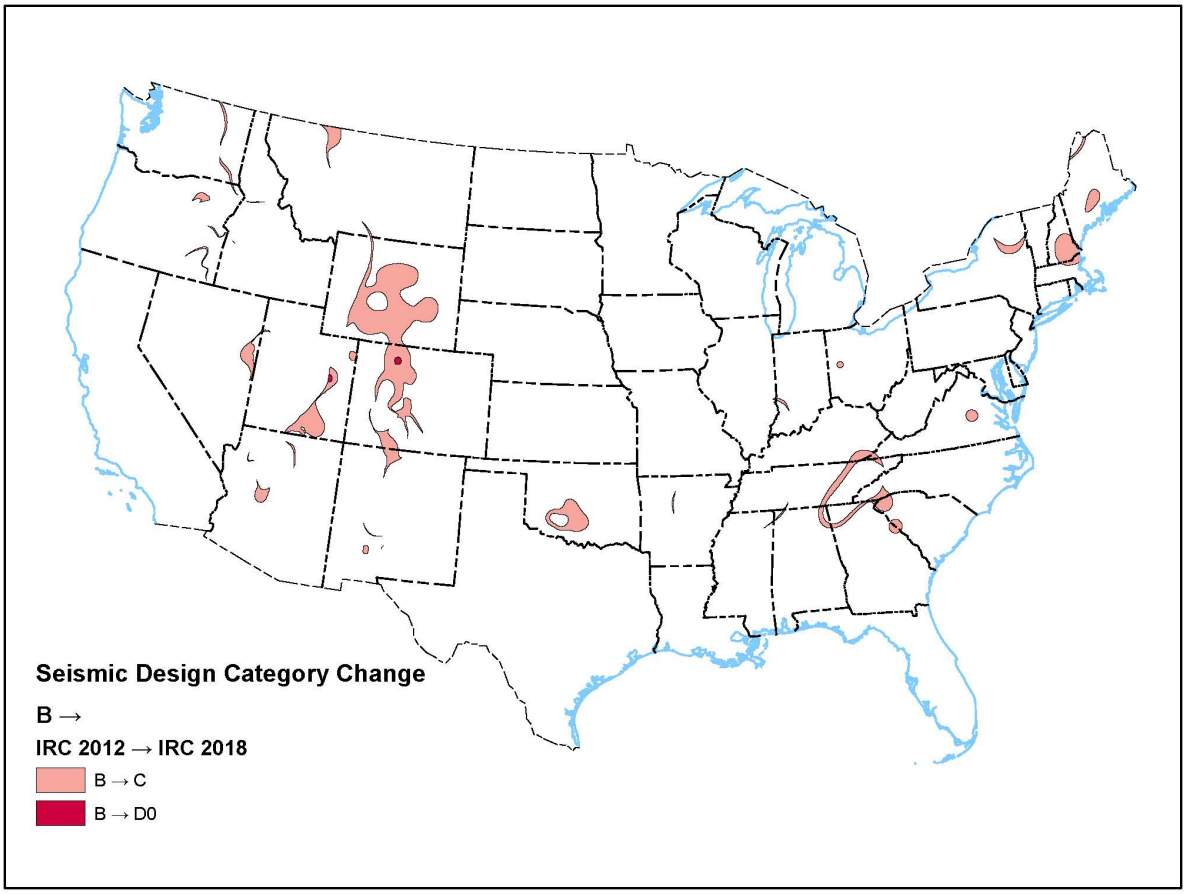
Seismic Design Category Change
B →
IRC 2012 → IRC 2018
B → C
B → D0

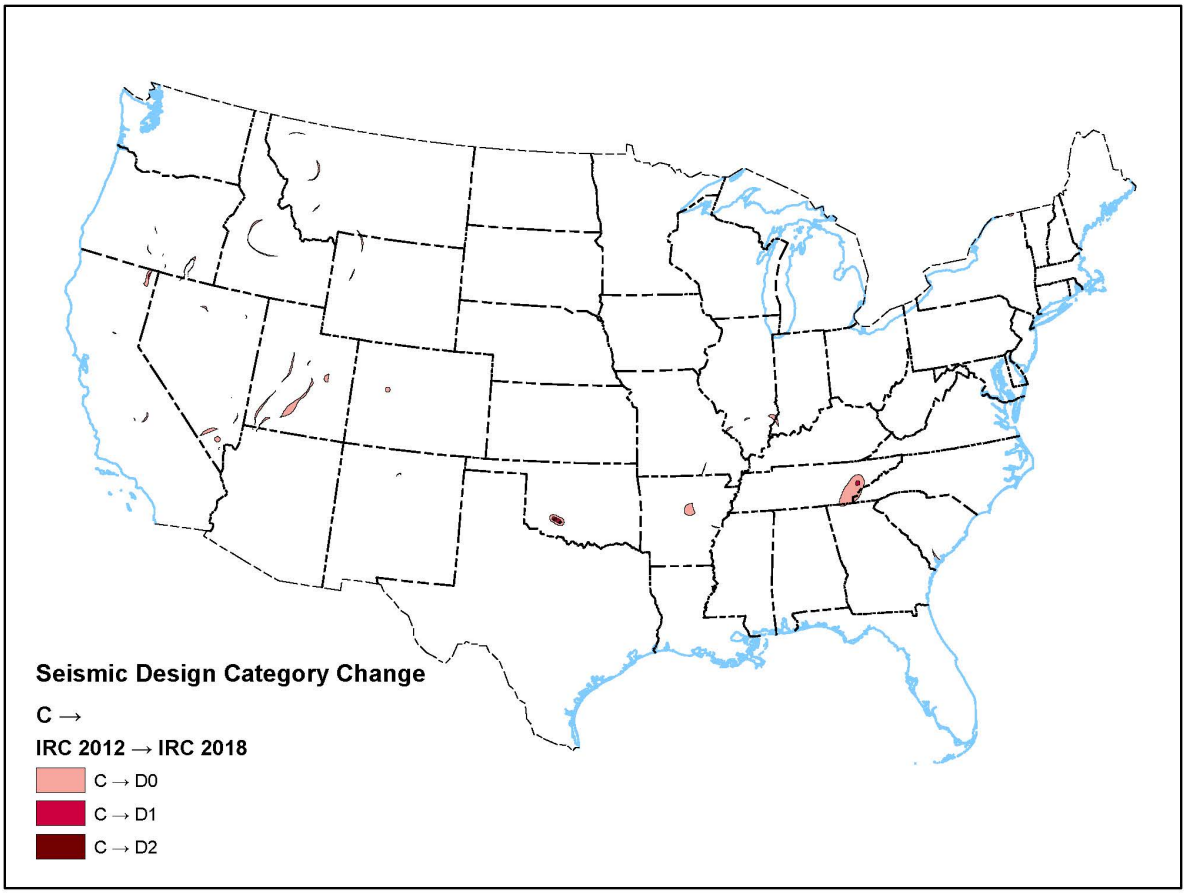
Seismic Design Category Change
C →
IRC 2012 → IRC 2018
C → D0
C → D1
C → D2

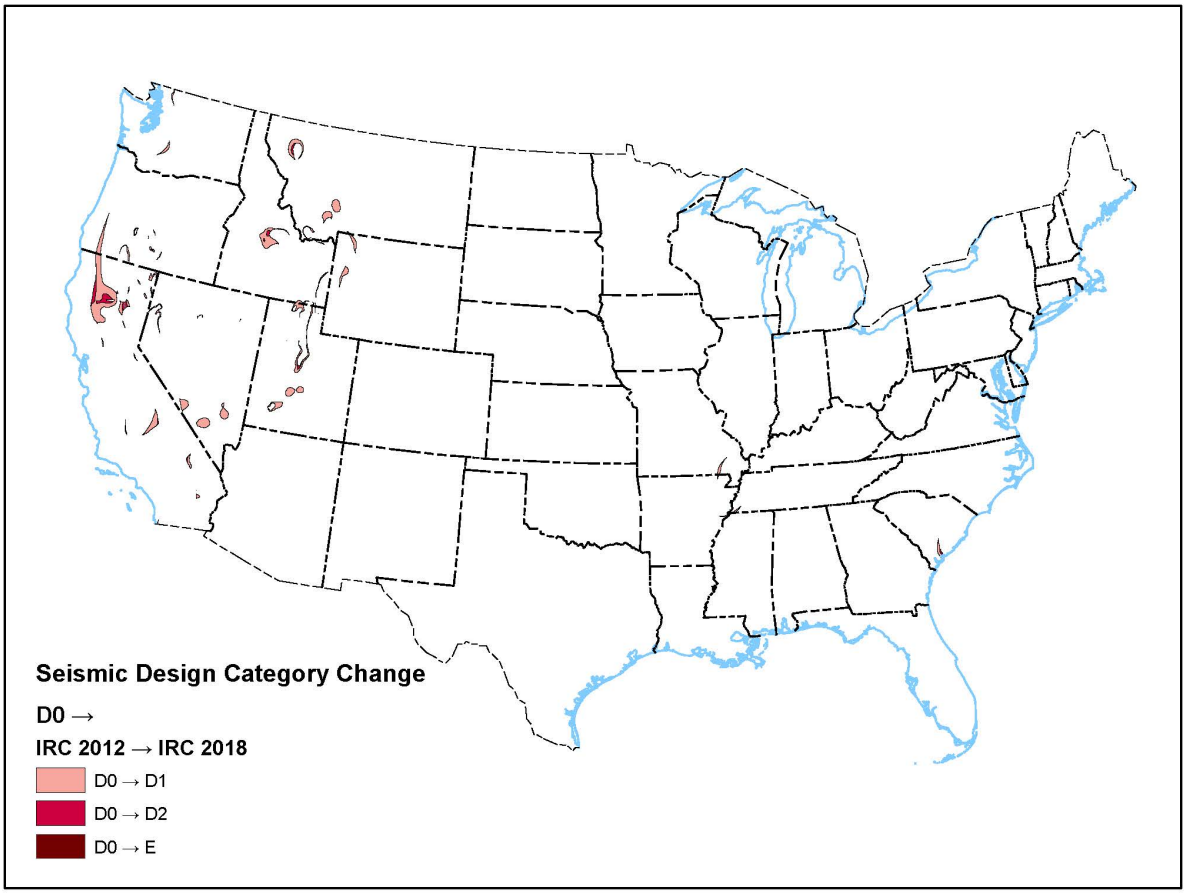
Seismic Design Category Change
D0 →
IRC 2012 → IRC 2018
D0 → D1
D0 → D2
D0 → E

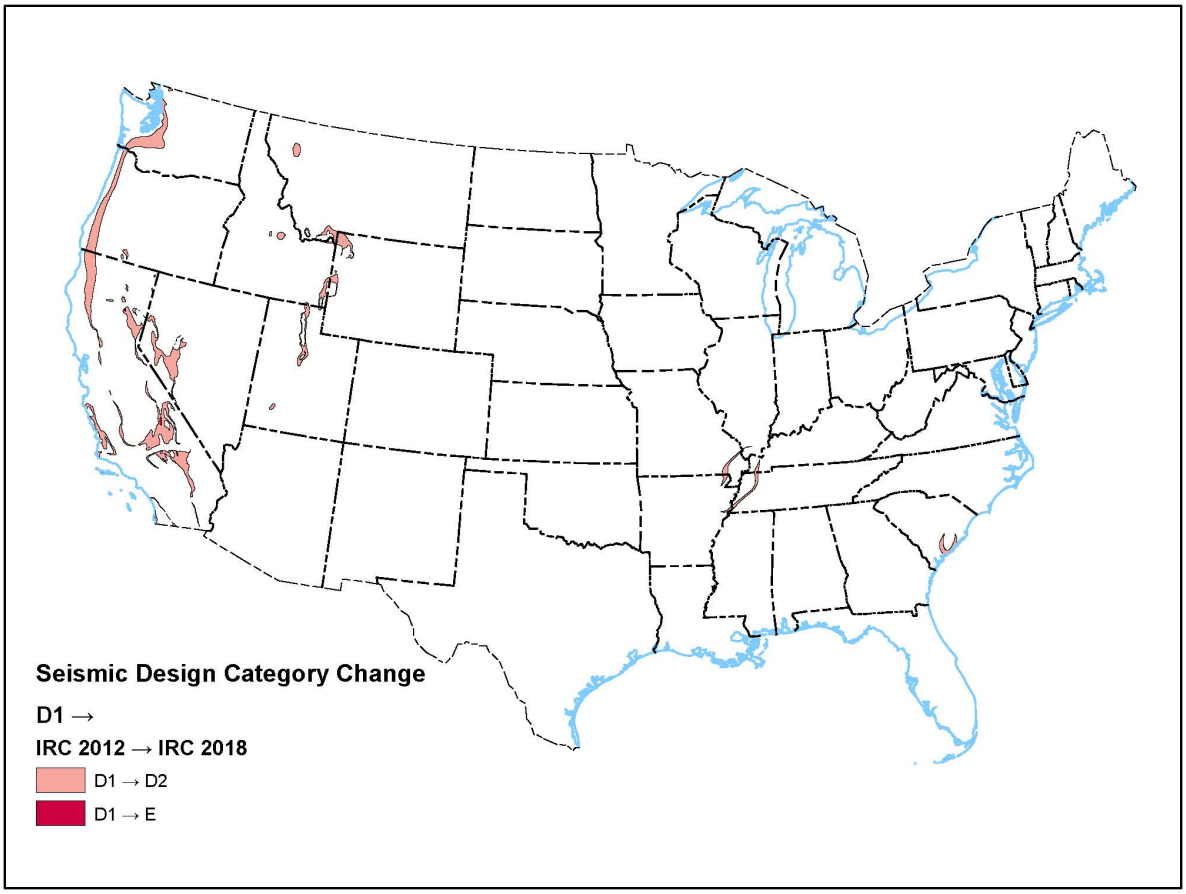
Seismic Design Category Change
D1 →
IRC 2012 → IRC 2018
D1 → D2
D1 → E

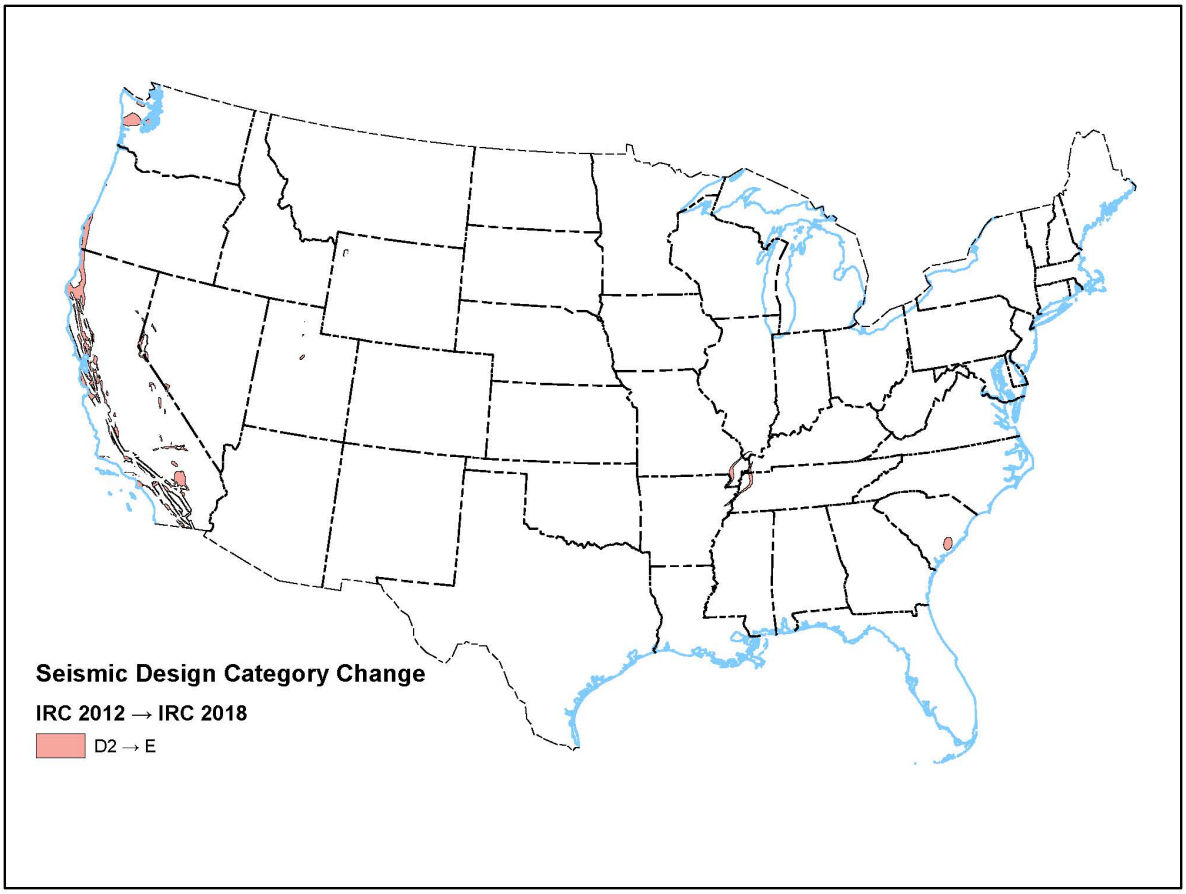
Seismic Design Category Change
IRC 2012 → IRC 2018
D2 → E

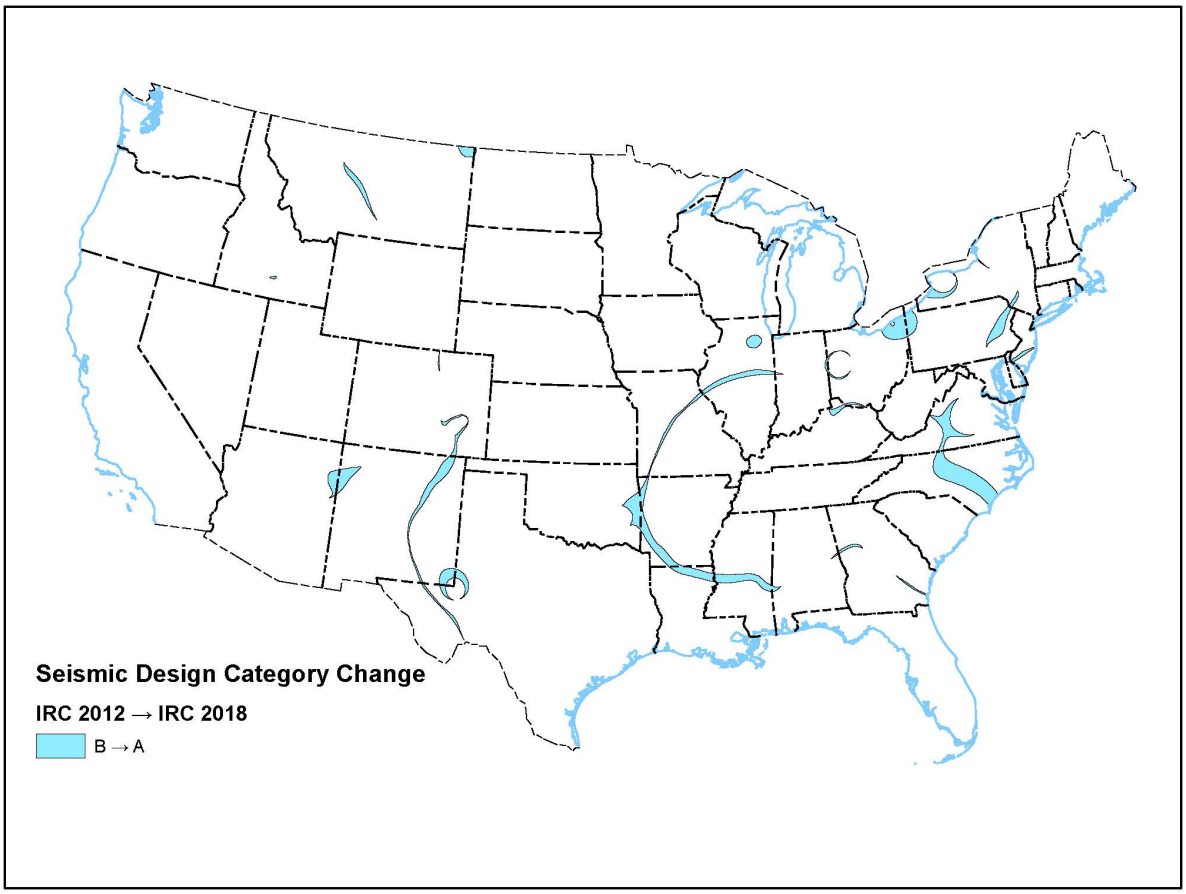
Seismic Design Category Change
IRC 2012 → IRC 2018
B → A

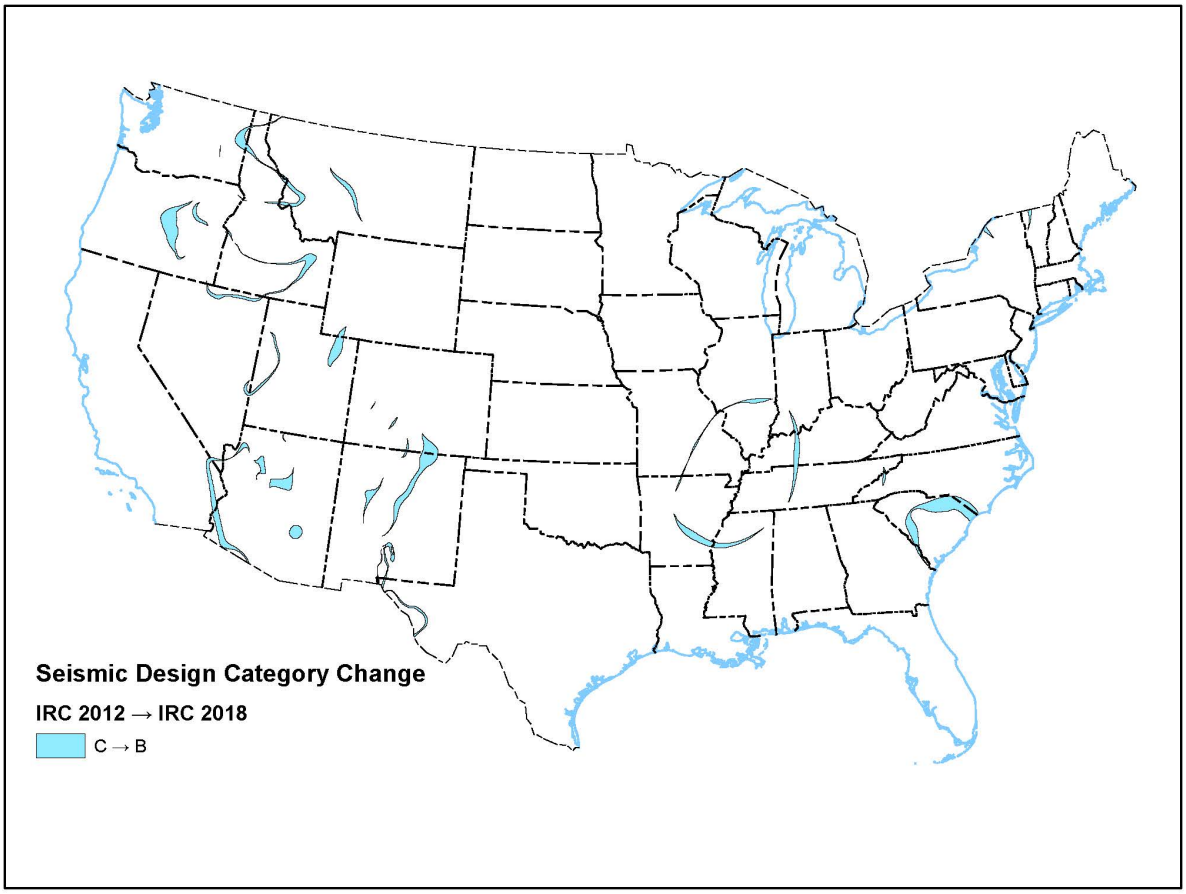
Seismic Design Category Change
IRC 2012 → IRC 2018
C → B

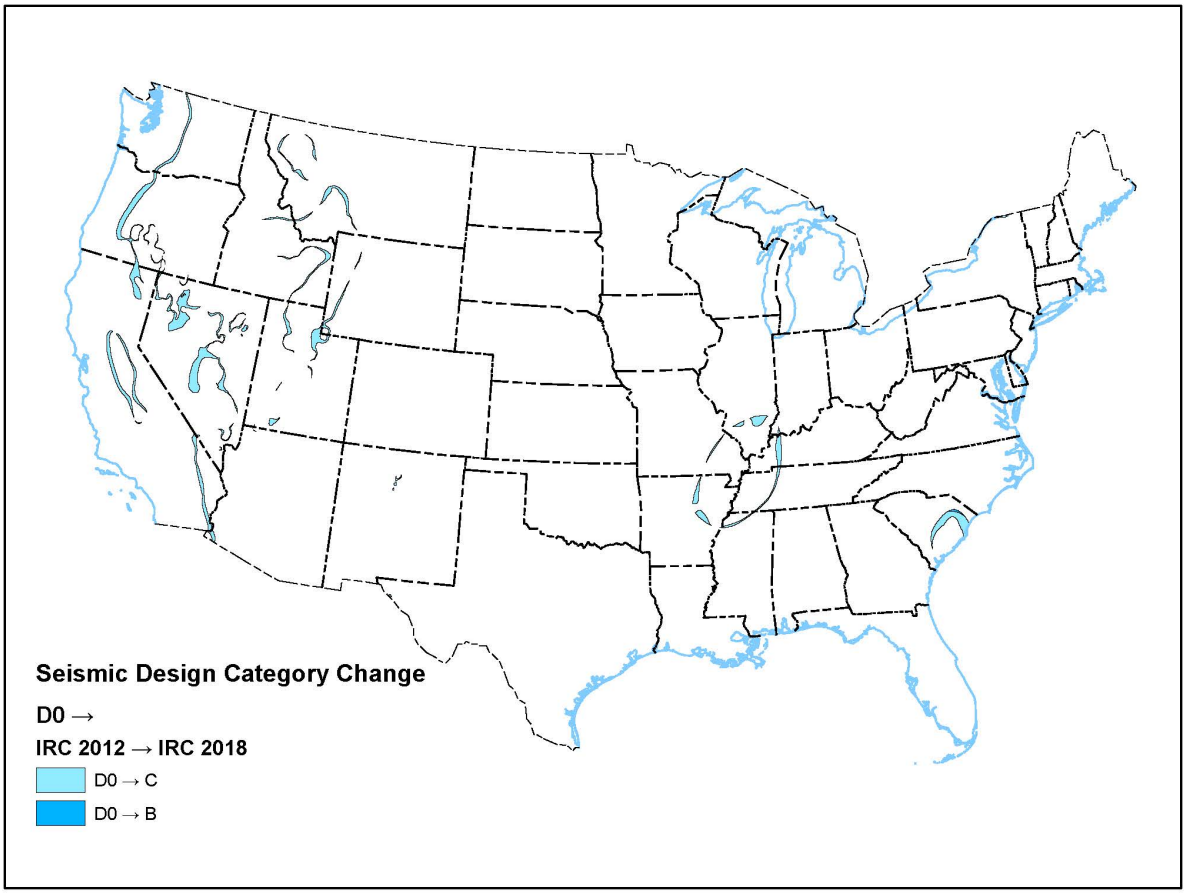
Seismic Design Category Change
D0 →
IRC 2012 → IRC 2018
D0 → C
D0 → B

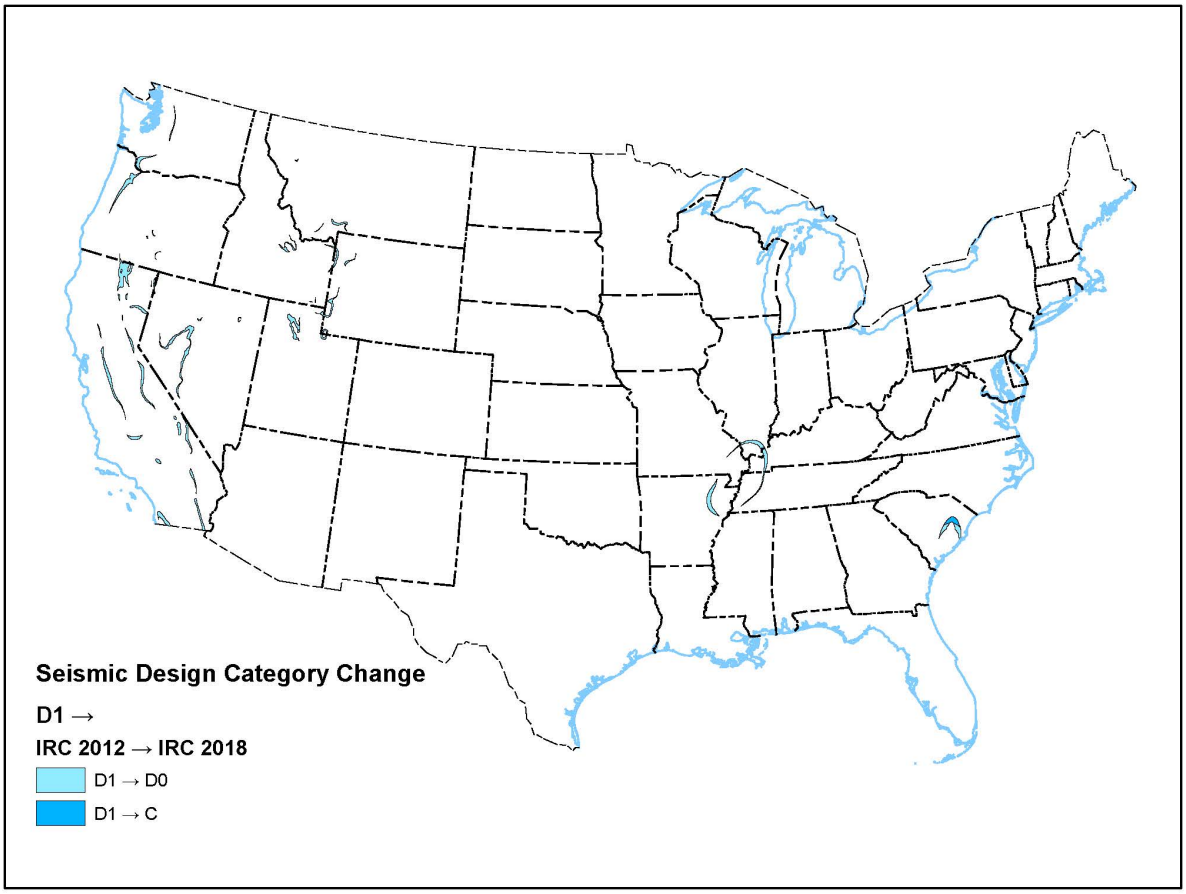
Seismic Design Category Change
D1 →
IRC 2012 → IRC 2018
D1 → D0
D1 → C

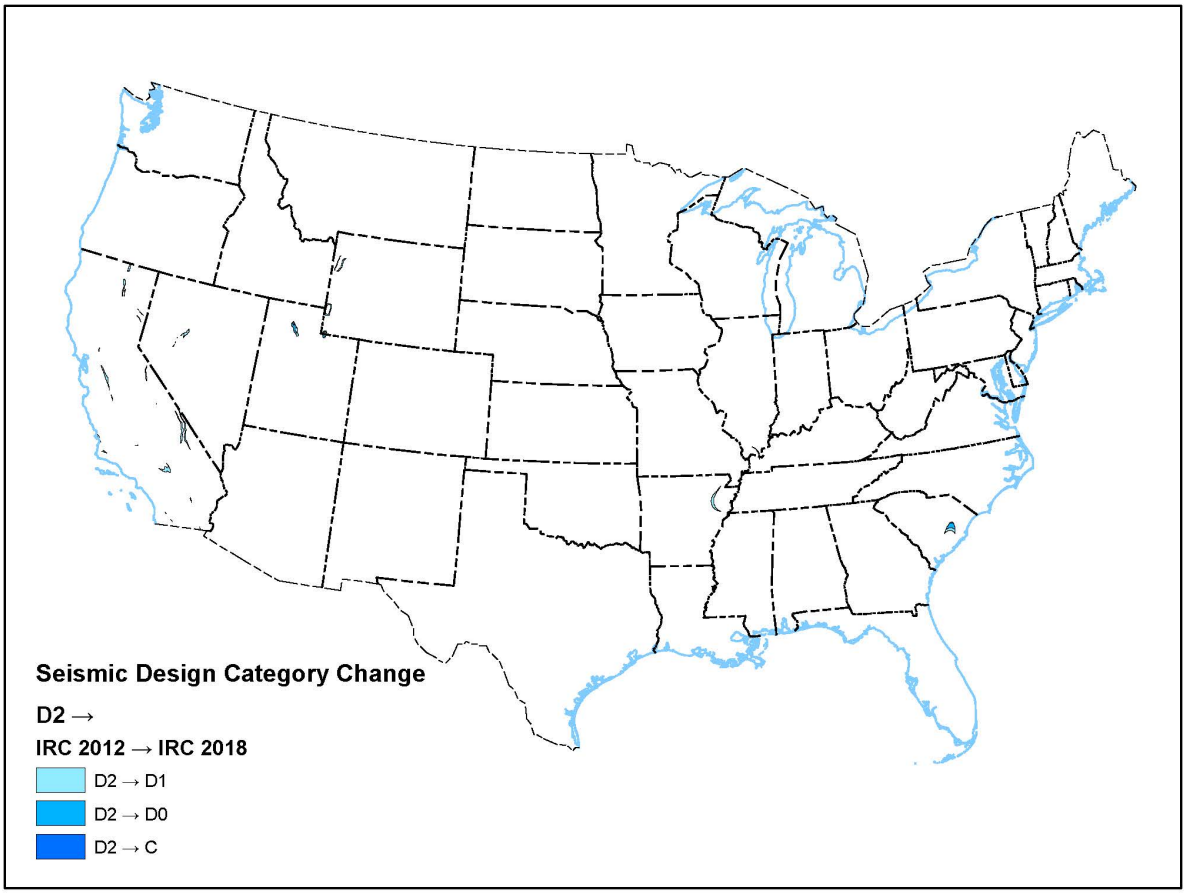
Seismic Design Category Change
D2 →
IRC 2012 → IRC 2018
D2 → D1
D2 → D0
D2 → C

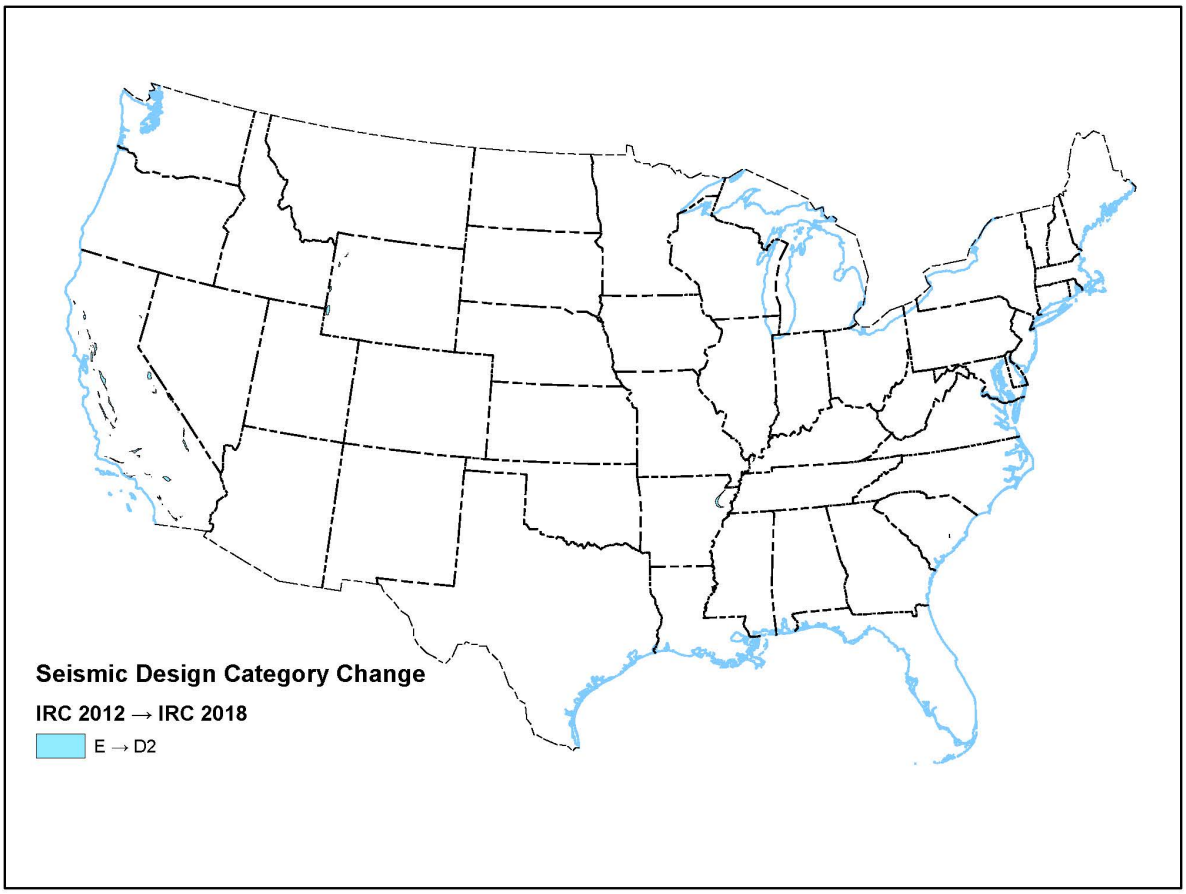

Bibliography: [NEHRP Recommended Seismic Provisions for New Buildings and Other Structures] [FEMA P-1050-1] [Building Seismic Safety Council] [2015] [Pages 189-194] [https://www.fema.gov/media-library/assets/documents/107646]
[Geotechnical Engineering State of the Art and Practice, Keynote Lectures from GeoCongress 2012] [Site Response in NEHRP Provisions and NGA Models] [Seyahn, E. and Stewart, J.P.] [2012] [Pages 359-379]

[Earthquake Spectra] [Semi-empirical Nonlinear Site Amplification from NGA West2 Data and Simulations] [Seyhan, E. and Stewart, J.] [2014] [Volume 30, pages 1241-1256]

[Earthquake Spectra] [Updates to Building-Code Maps for the 2015 NEHRP Recommended Seismic Provisions] [Luco, N., Bachman, R.E., Crouse, C.B., Harris, J.R., Hooper, J.D., Kircher, C.A., Caldwell, P.J., and Rukstales, K.S.] [2015] [Volume 31, pages S245-S271]

Cost Impact: Will increase the cost of construction
This code change can result in modest increases OR decreases in construction cost depending on geographic region. Where the R301.2(2) Seismic Design Category maps are used, limited locations as illustrated by the attached USGS maps, will increase or decrease in Seismic Design Category, increasing or decreasing seismic bracing requirements and cost a modest amount. The amount of increase will vary depending on the specific change in Seismic Design Category, the wind bracing requirements, and the particulars of the dwelling and its construction. In some cases increases in Seismic Design Category and resulting cost can be reduced if not eliminated where the site soils allow the use of the Alternate Seismic Design Category maps. NIST GCR 14-917-26, *Cost Analyses and Benefits for Earthquake-Resistant Construction in Memphis, Tennessee*, provides one example of the magnitude of seismic design cost impact; the increment in cost for apartment building construction between design for code-required wind loads and national seismic design provisions is on the order of one percent of construction cost.

Analysis: Colored images will be converted to gray scale for printed codes.

Coordinated code change proposal for the IBC is S119-16.

RB17-16 :
FIGURE R301.2-
COBEEN11683

Public Hearing Results

Committee Action: **Approved as Submitted**

Committee Reason: The updated maps in this proposal are based on more current information and they provide a measure of flexibility that has not been included in the code in the past.

Assembly Motion: **Disapprove**
Online Vote Results: **Failed**
Support: 34.18% (94) Oppose: 65.82% (181)
Assembly Action: **None**

Individual Consideration Agenda

Public Comment 1:

Proponent : Gary Ehrlich, National Association of Home Builders, representing National Association of Home Builders (gehrlich@nahb.org) requests Approve as Modified by this Public Comment.

Modify as Follows:

2015 International Residential Code

~~R301.2(2)-1~~ (2)
~~SEISMIC DESIGN CATEGORIES~~

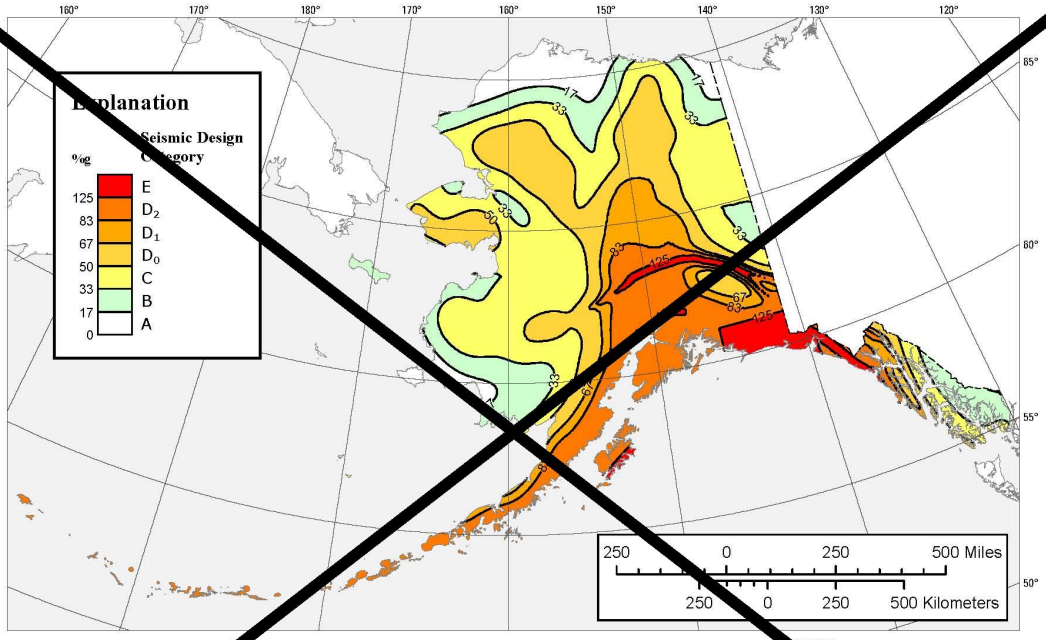

Map prepared by U.S. Geological Survey in collaboration with the Federal Emergency Management Agency (FEMA) and Building Seismic Safety Council's (BSSC) Code Resource Support Committee (CRSC).

REFERENCES

Building Seismic Safety Council, 2015, NEHRP Recommended Seismic Provisions for New Buildings and Other Structures: FEMA P-1050, Federal Emergency Management Agency, Washington, DC.
Huang, Yin-Nan, Whittaker, A.S., and Luco, Nicolas, 2011, Maximum spectral demands in the near-fault region, Earthquake Spectra Volume 24, Issue 1, pp. 319-341.
Luco, Nicolas, Ellingwood, B.R., Hamburger, R.O., Hooper, J.D., Kimball, J.K., and Kircher, C.A., 2007, Risk-Targeted versus Current Seismic Design Maps for the Conterminous United States, Structural Engineers Association of California 2007 Convention Proceedings, pp. 163-175.
Wesson, Robert L., Boyd, Oliver S., Mueller, Charles S., Bufe, Charles G., Frankel, Arthur D., Petersen, Mark D., 2007, Revision of time-independent probabilistic seismic hazard maps for Alaska: U.S. Geological Survey Open-File Report 2007-1043.

FIGURE R301.2(2) - continued
SEISMIC DESIGN CATEGORIES

~~R301.2(2)-5~~ (2)
~~SEISMIC DESIGN CATEGORIES~~

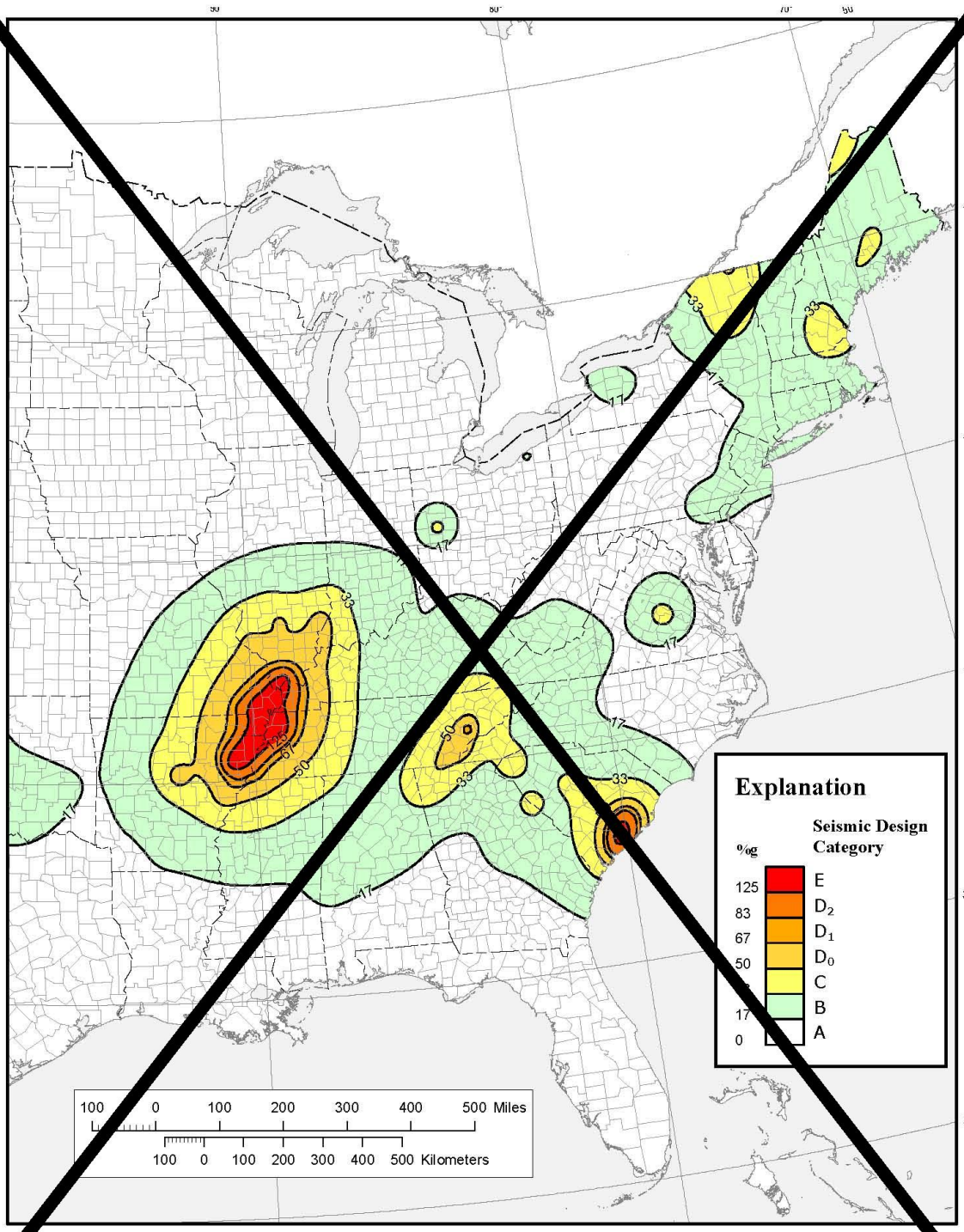

FIGURE R301.2(2) - continued
SEISMIC DESIGN CATEGORIES

~~R301.2(2)-4~~ (2)
~~SEISMIC DESIGN CATEGORIES~~

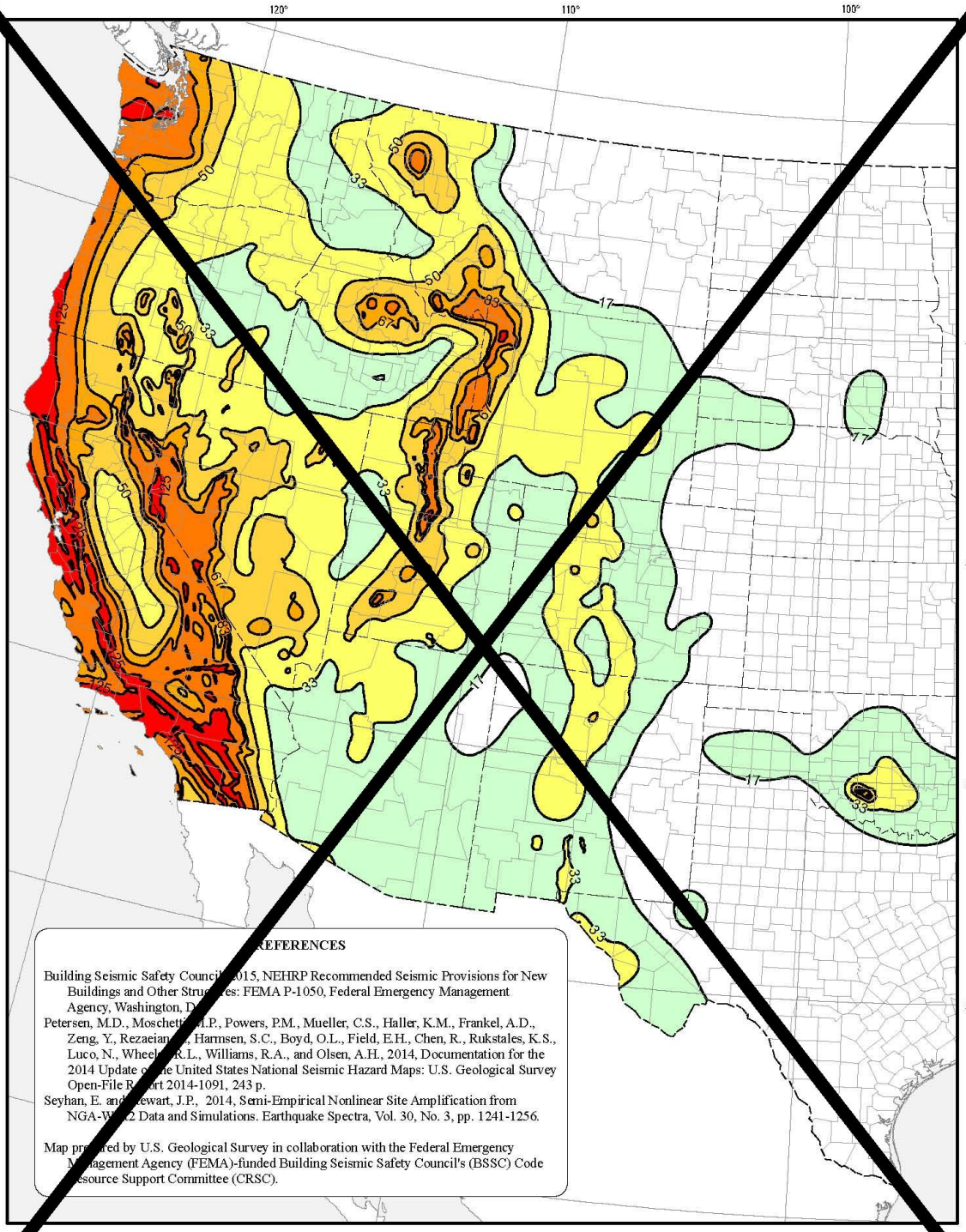

FIGURE R301.2(2)
SEISMIC DESIGN CATEGORIES

~~R301.2(2)-3~~ (2)
~~SEISMIC DESIGN CATEGORIES~~

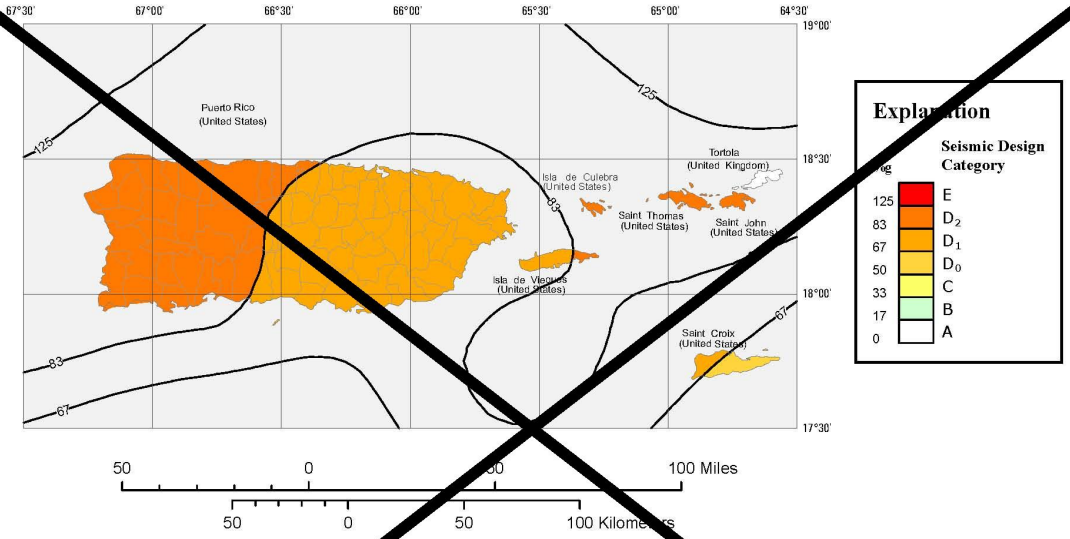

REFERENCES

Building Seismic Safety Council, 2015, NEHRP Recommended Seismic Provisions for New Buildings and Other Structures (FEMA P-1050, Federal Emergency Management Agency, Washington, DC.
Huang, Yin-Nan, Whittaker, A.S., and Luco, Nicolas, 2008, Maximum spectral demands in the near-fault region, Earthquake Spectra, Volume 24, Issue 1, pp. 319-341.
Luco, Nicolas, Ellingwood, B.R., Hamburger, R.O., Hooper, J.D., Kimball, J.K., and Kircher, C.A., 2007, Risk-Targeted versus Current Seismic Design Maps for the Conterminous United States, Structural Engineers Association of California 2007 Convention Proceedings, pp. 163-175.
Mueller, C., Frankel, A., Petersen, M., and Leyendecker, E., 2003, Documentation for 2003 USGS Seismic Hazard Maps for Puerto Rico and the Virgin Islands, U.S. Geological Survey Open-File Report 03-379.

Map prepared by U.S. Geological Survey in collaboration with the Federal Emergency Management Agency (FEMA)-funded Building Seismic Safety Council's (BSSC) Code Resource Support Committee (CRSC).

FIGURE R301.2(2) - continued
SEISMIC DESIGN CATEGORIES

~~R301.2(2)-2~~ (2)
~~SEISMIC DESIGN CATEGORIES~~

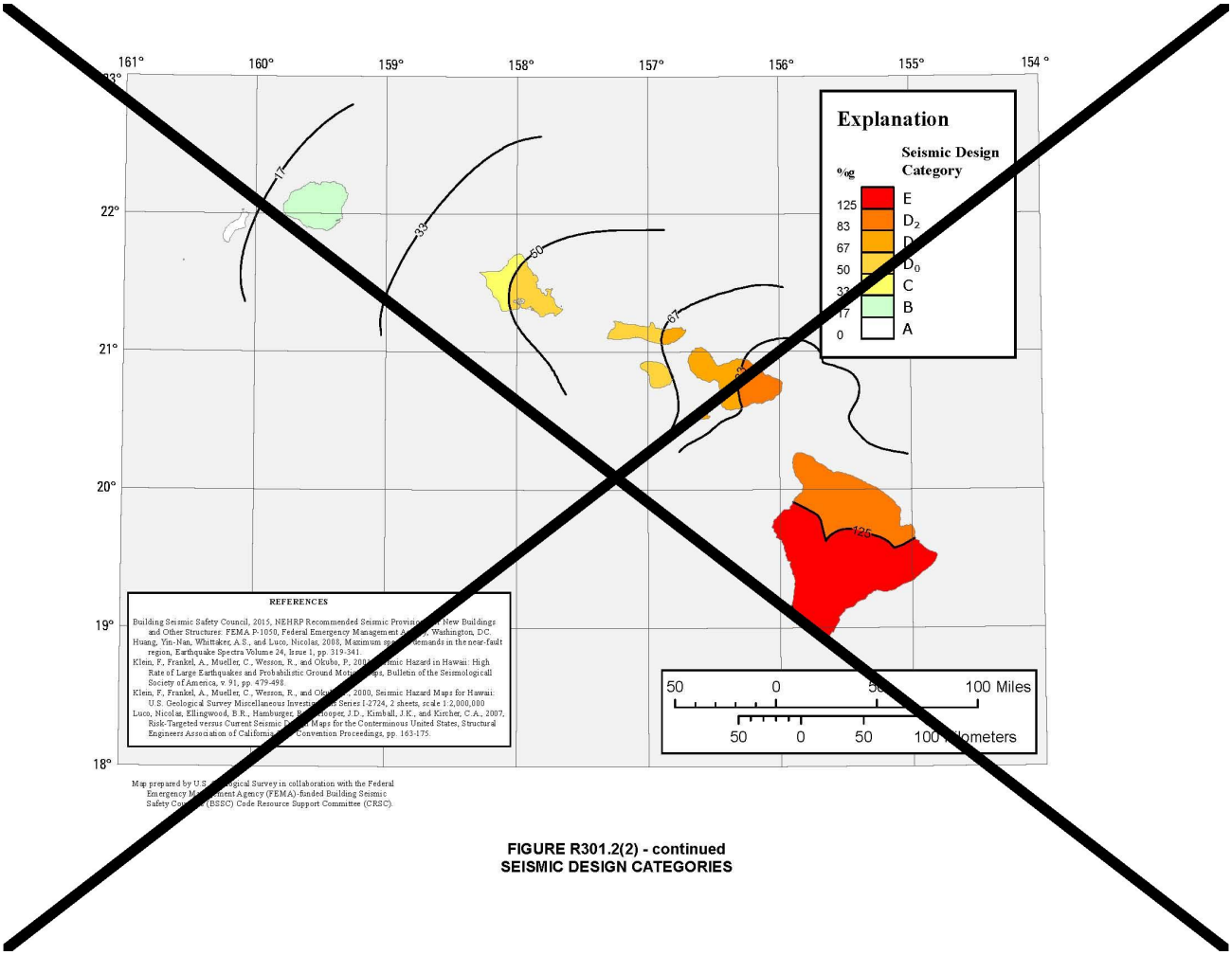

FIGURE R301.2(2) - continued
SEISMIC DESIGN CATEGORIES

R301.2.2.1.1 Alternate determination of seismic design category. The seismic design categories and corresponding short-period design spectral response accelerations, S_{DS}, shown in Figure R301.2(2) are based on soil Site Class D~~, used as an assumed default,~~ as defined in Section 1613.3.2 of the *International Building Code*. If soil conditions are ~~determined by the building official to be~~ other than Site Class ~~A, B, or~~ D, the seismic design cateogory and short-period design spectral response accelerations, S_{DS}, for a site shall be allowed to be determined in accordance with Figure ~~R301.2(3~~ R301.2(2) or Section 1613.3 of the International Building Code. Where required by the building official due to local soil conditions, the seismic design cateogory and short-period design spectral response accelerations, S_{DS}, for a site shall be determined in accordance with Section 1613.3 of the International Building Code. The value of S_{DS} determined in accordance with Section 1613.3 of the International Building Code is permitted to be used to set the seismic design category in accordance with Table R301.2.2.1.1, and to interpolate between values in Tables R602.10.3(3), R603.9.2(1) and other seismic design requirements of this code.

R301.2.2.1.2 Alternative determination of Seismic Design Category E. Buildings located in Seismic Design Category E in accordance with Figure R301.2(2)~~, or Figure R301.2(3) where applicable~~, are permitted to be reclassified as being in Seismic Design Category D_2 provided that one of the following is done:

1. A more detailed evaluation of the seismic design category is made in accordance with the provisions and maps of the *International Building Code*. Buildings located in Seismic Design Category E in accordance with Table R301.2.2.1.1, but located in Seismic Design Category D in accordance with the *International Building Code*, shall be permitted to be designed using the Seismic Design Category D_2 requirements of this code.
2. Buildings located in Seismic Design Category E that conform to the following additional restrictions are permitted to be constructed in accordance with the provisions for Seismic Design Category D_2 of this code:
   - 2.1. All exterior shear wall lines or *braced wall panels* are in one plane vertically from the foundation to the uppermost *story*.
   - 2.2. Floors shall not cantilever past the *exterior walls*.
   - 2.3. The building is within the requirements of Section R301.2.2.2.5 for being considered as regular.

FIGURE ~~R301.2(3~~ R301.2(2)-continued
~~Alternate~~ Seismic Design Categories - Site Class D

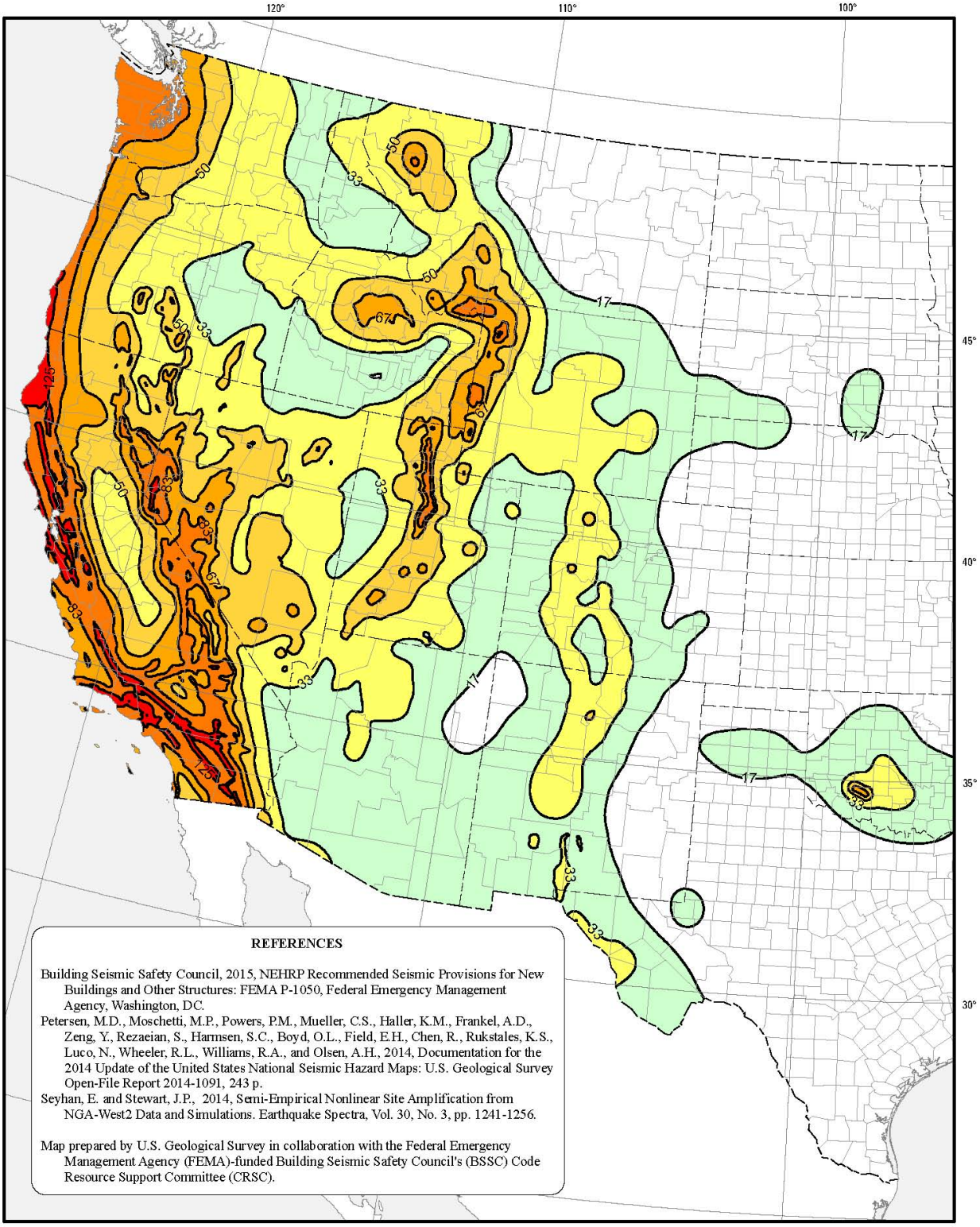

FIGURE ~~R301.2(3~~ R301.2(2)-continued
~~Alternate~~ Seismic Design Categories - Site Class D

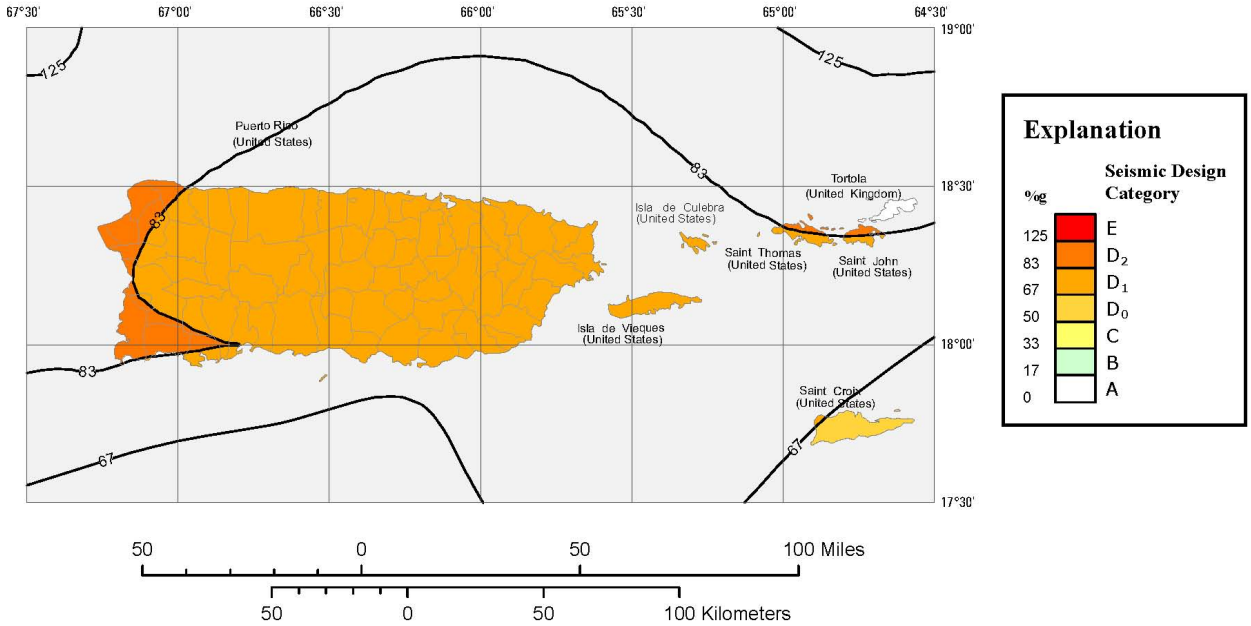

REFERENCES

Building Seismic Safety Council, 2009, NEHRP Recommended Provisions for Seismic Regulations for New Buildings and Other Structures: FEMA P750/2009 Edition, Federal Emergency Management Agency, Washington, DC

Huang, Yin-Nan, Whittaker, A.S., and Luco, Nicolas, 2008, Maximum spectral demands in the near-fault region, Earthquake Spectra Volume 24, Issue 1, pp. 319-341.

Luco, Nicolas, Ellingwood, B.R., Hamburger, R.O., Hooper, J.D., Kimball, J.K., and Kircher, C.A., 2007, Risk-Targeted versus Current Seismic Design Maps for the Conterminous United States, Structural Engineers Association of California 2007 Convention Proceedings, pp. 163-175.

Mueller, C., Frankel, A., Petersen, M., and Leyendecker, E., 2003, Documentation for 2003 USGS Seismic Hazard Maps for Puerto Rico and the U.S. Virgin Islands, U.S. Geological Survey Open-File Report 03-379.

Map prepared by U.S. Geological Survey in collaboration with the Federal Emergency Management Agency (FEMA)-funded Building Seismic Safety Council's (BSSC) Code Resource Support Committee (CRSC).

FIGURE ~~R301.2(3~~ R301.2(2)-continued
~~Alternate~~ Seismic Design ~~Categories~~ Categories-Site Class D

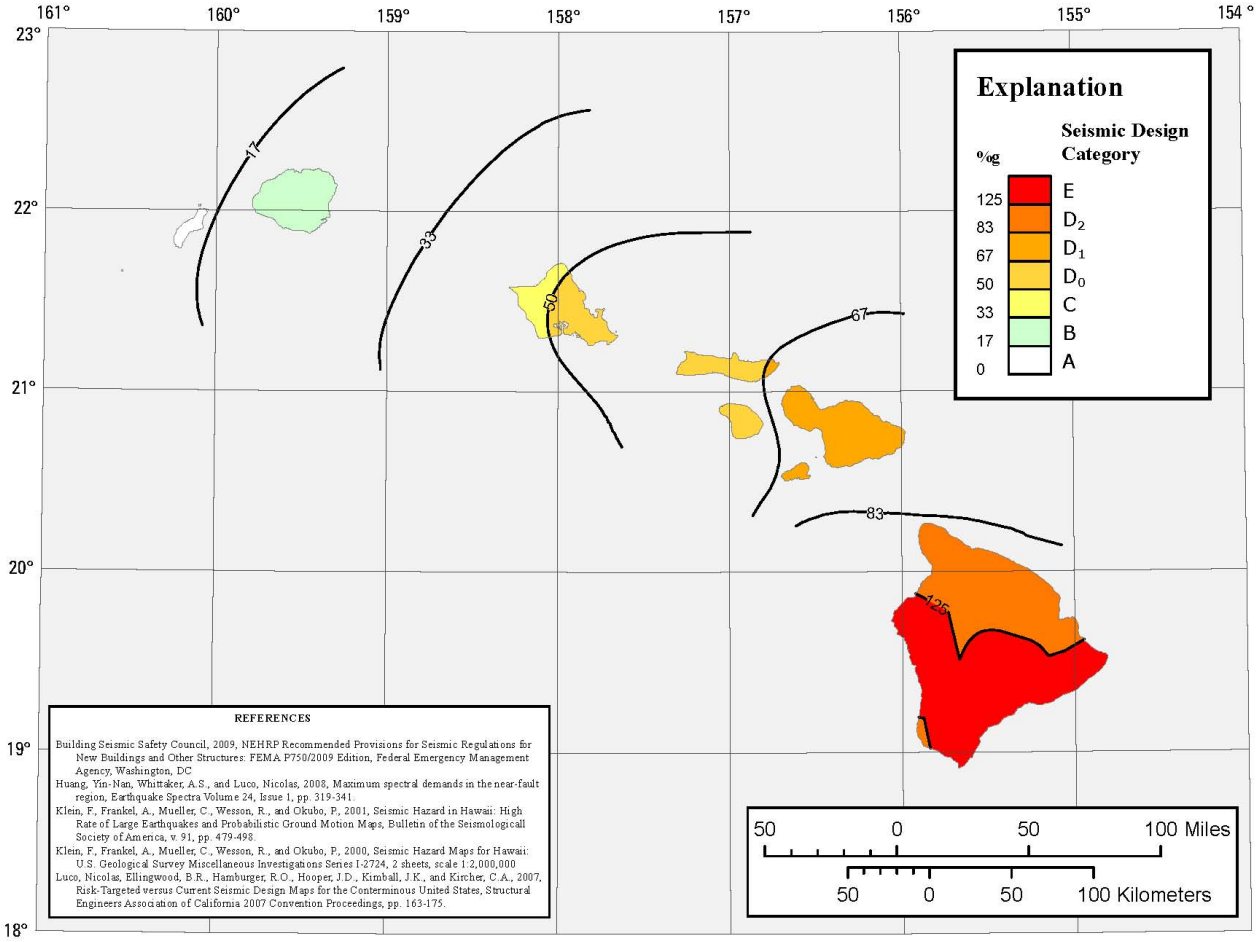

Map prepared by U.S. Geological Survey in collaboration with the Federal Emergency Management Agency (FEMA)-funded Building Seismic Safety Council's (BSSC) Code Resource Support Committee (CRSC).

FIGURE ~~R301.2(3~~ R301.2(2)-continued
~~Alternate~~ Seismic Design Categories - Site Class D

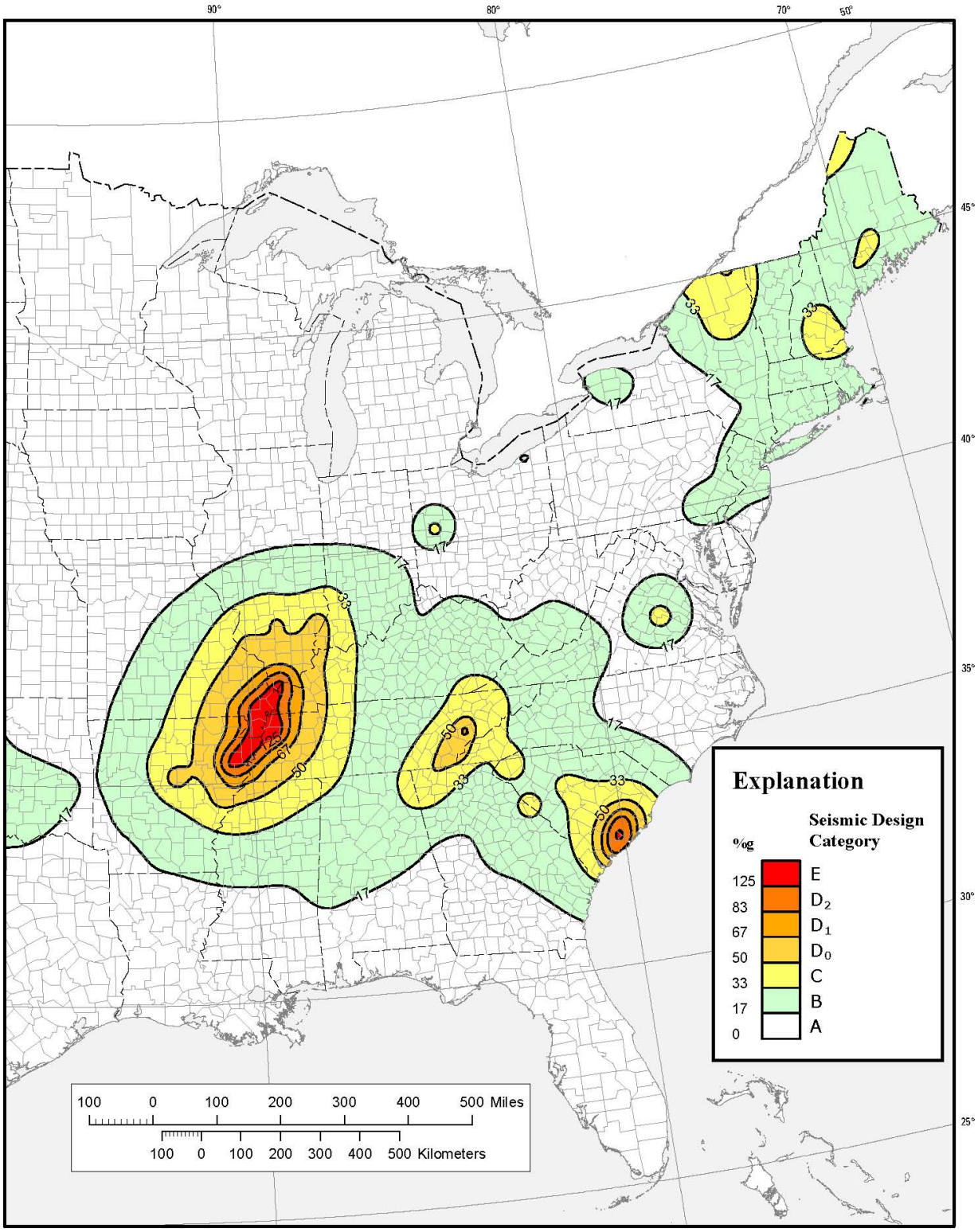

FIGURE ~~R301.2(3~~ R301.2(2)
~~Alternate~~ Seismic Design ~~Categories~~ Categories-Site Class D

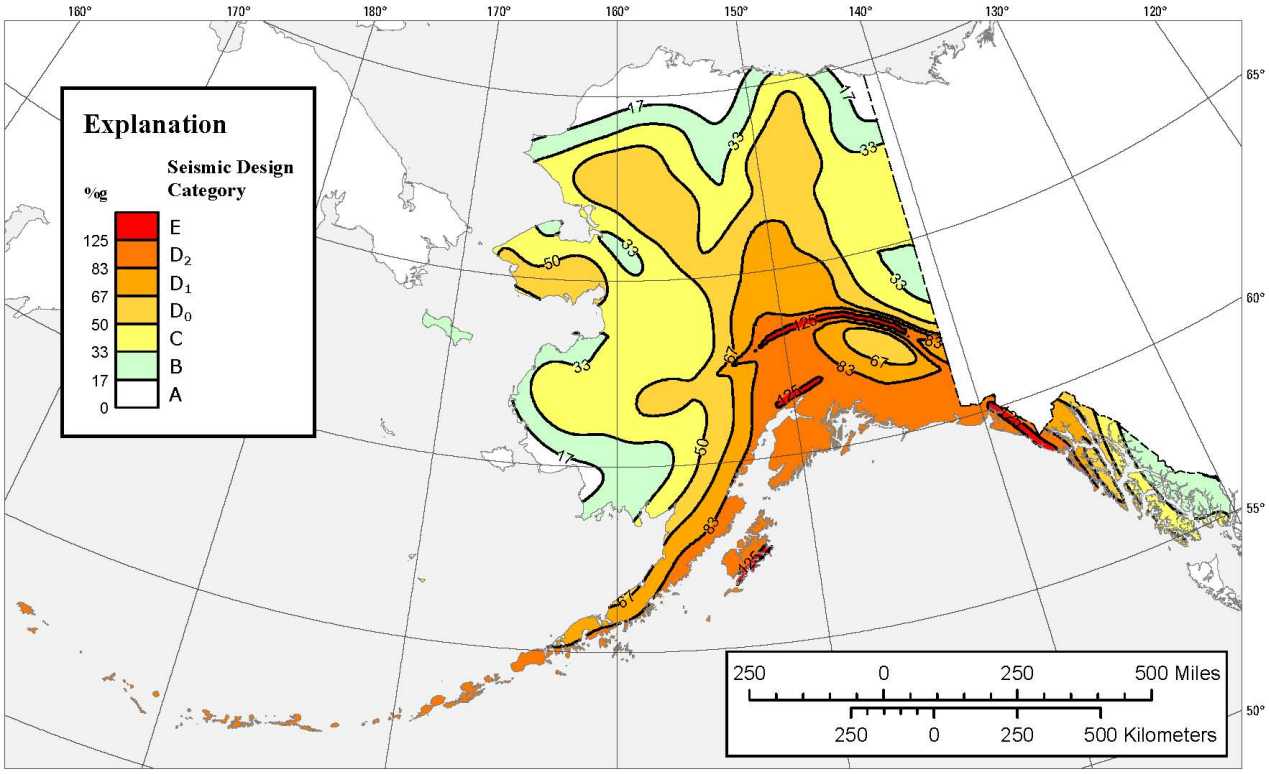

Map prepared by U.S. Geological Survey in collaboration with the Federal Emergency Management Agency (FEMA)-funded Building Seismic Safety Council's (BSSC) Code Resource Support Committee (CRSC).

REFERENCES

Building Seismic Safety Council, 2009, NEHRP Recommended Provisions for Seismic Regulations for New Buildings and Other Structures: FEMA P750/2009 Edition, Federal Emergency Management Agency, Washington, DC

Huang, Yin-Nan, Whittaker, A.S., and Luco, Nicolas, 2008, Maximum spectral demands in the near-fault region, Earthquake Spectra Volume 24, Issue 1, pp. 319-341.

Luco, Nicolas, Ellingwood, B.R., Hamburger, R.O., Hooper, J.D., Kimball, J.K., and Kircher, C.A., 2007, Risk-Targeted versus Current Seismic Design Maps for the Conterminous United States, Structural Engineers Association of California 2007 Convention Proceedings, pp. 163-175.

Wesson, Robert L., Boyd, Oliver S., Mueller, Charles S., Bufe, Charles G., Frankel, Arthur D., Petersen, Mark D., 2007, Revision of time-Independent probabilistic seismic hazard maps for Alaska: U.S. Geological Survey Open-File Report 2007-1043.

Commenter's Reason: The purpose of this public comment is to adopt the maps of "Alternate Seismic Design Categories" as the base maps, instead of providing two sets of maps and leaving it to the building department to determine which one builders in the community can use.

Both sets of maps proposed by RB17-16 are based on the *2014 Update of the United States National Seismic Hazard Maps* produced by USGS and adopted by the 2014 NEHRP Provisions. The exact same ground motion data was used to develop both maps. The only difference is that the 2014 NEHRP provisions and ASCE 7-16 impose a penalty on sites for which no geotechnical investigation has been done, or for which one has been done but the site class has not been determined. This penalty stems from a new study of site coefficients that suggests at higher ground motions the coefficients for Site Class C conditions (stiff soil with some rock) are higher than Site Class D (stiff soil). Sites that are assumed to be Site Class D without a geotechnical determination are forced to use the higher Site Class C coefficients to avoid potential issues due to misclassification of the site.

No field observations or other justification was provided to the NEHRP and ASCE 7-16 committees that a widespread problem with misclassified Site Classes actually exists, in either commercial or residential construction. One- and two-family dwellings, even those not constructed to the IRC, have traditionally performed well in seismic events if any cripple walls were properly braced, a sufficient amount of wall bracing was provided on exterior walls, brick veneer was anchored with ties at an appropriate spacing, and the dwelling was not constructed on an unstable hillside or over liquefiable soils. These elements of design, detailing and siting are much more critical to building performance than a 10% or 20% difference in the short-period design spectral response acceleration. This is especially true in the Central and Eastern United States, given the conservative estimates of historical earthquakes and resulting conservative biases in the ground motion data.

To address concerns about soil conditions for which the site factors are higher than those for Site Class D, the ability of the building official to require the seismic design category be determined using the IBC and ASCE 7 is maintained. In fact, it is strengthened – under the existing code language use of the IBC for other site classes is allowed, but it is not required, even in a case such as Site Class E and short period spectral response accelerations less than 1.0g where a higher SDS would result even under the current site factors. Therefore, the text is modified to retain the option of using the IBC and ASCE 7 for any Site Class other than Site Class D, but require the use of the IBC and ASCE 7 if the building official determines that higher site factors apply due to Site Class C, E or F soils being present.

RB18-16

IRC: R301.2, R301.2(2) (New), R301.2(3) (New).

Proposed Change as Submitted

Proponent : James Bela, representing Oregon Earthquakie Awareness (sasquake@gmail.com)

2015 International Residential Code

Delete and substitute as follows:

~~FIGURE R301.2 (2)~~
~~SEISMIC DESIGN CATEGORIES—SITE CLASS D~~

FIGURE R301.2(2)
LATERAL DESIGN STRENGTH (BASE SHEAR) COEFFICIENT EXPRESSED AS SEISMIC ZONES 0-4 1994/1997 UBC

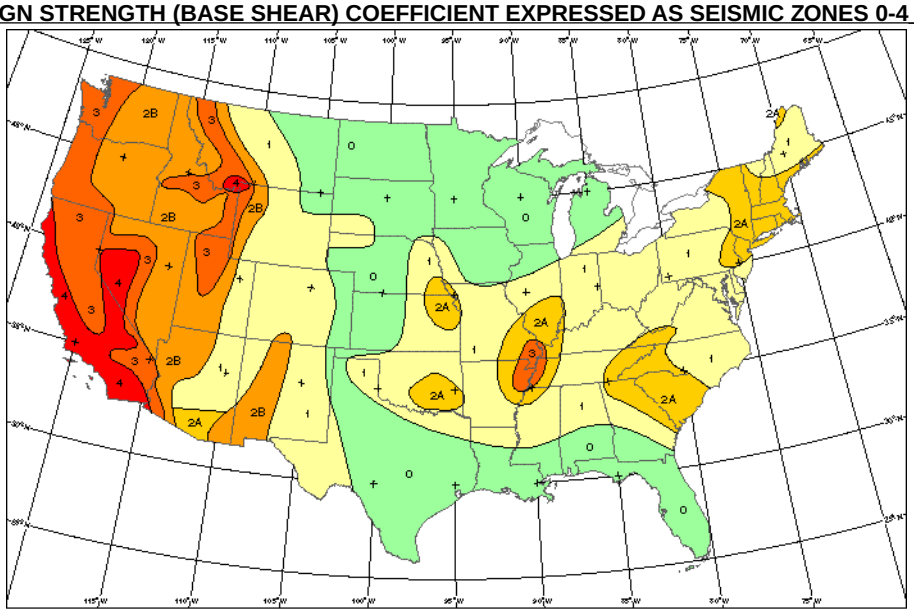

Figure A7. 1994 Uniform Building Code zone map. Zones are identified by the numbers from 0 to 4. Seismic zone factors are assigned to each zone; Zone 0 = 0, Zone1 = 0.075, Zone 2A = 0.15, Zone 2B = 0.20, Zone 3 = 0.3, and Zone 4 = 0.4. Each zone also has specific structural detailing requirements. After ICBO, 1994 (This map was redrawn from the original source, if differences occur, the original source should be used).

FIGURE R301.2(3)
LATERAL DESIGN STRENGTH (BASE SHEAR) COEFFICIENT EXPRESSED AS SEISMIC ZONES 0-4 1994/1997 UBC

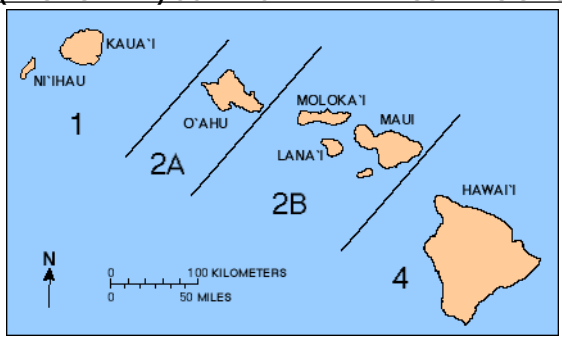

Reason: Seismic Design Categories are deleted in the IBC under separate code change proposals. See Proposal **Figure 1613.3.1 RISK-TARGETED MCE_R . The identical lateral design strength coefficient map is to be used for both codes!**

People confuse the SDCs with a static loading, like the snow load; which is fundamentally (as well as categorically) incorrect.

SDCs do not realistically reflect the Magnitudes of earthquakes that may impact said "Detached one- and two-family dwellings," nor their associated real intensities of shaking (accelerations and velocities, including pga and pgv); (2) the contour seismic hazard-model maps, upon which the assigned SDCs are determined, are (a) numerical creations without physical reality; (b) mathematically flawed and incorrect (because a dimensionless number, the probability in one year, is arbitrarily assigned dimensional terms of "per yr." or annual frequency – leading to the improperly applied notion of a so-called earthquake "return

period" as the basis on assigning earthquake design loads; and (c) non-stable between iterative cycles of creations (sometimes varying 25-30% between issues; and (d) SS or Spectral Response Acceleration is both confusing, misunderstood, and most certainly incorrectly interpreted or understood by all of the vast entities (state decision makers, code officials, design professionals, contractors and probably even the preponderance of ICC Committee members as well as Hearings attendees!

For example, see TAKE ME HOME SEISMIC LOADS

Bibliography: Cost Breakdown of Nonstructural Building Elements

Taghavi, S. and Miranda, E. (2003). Cost Breakdown of Nonstructural Building Elements, PEER Report 2003/05, Pacific Earthquake Engineering Rese3arch Center, U.C. Berkeley, 96 p.

Performance of Nonstructural Components during the 27 February 2010 Chile Earthquake.

Eduardo Miranda, Gilberto Mosqueda, Rodrigo Retamales, and Gokhan Pekcan (2012) Performance of Nonstructural Components during the 27 February 2010 Chile Earthquake. Earthquake Spectra: June 2012, Vol. 28, No. S1, pp. S453-S471.

doi:http://dx.doi.org/10.1193/1.4000032

http://www.earthquakespectra.org/doi/abs/10.1193/1.4000032

Low-Cost Earthquake Solutions for Nonengineered Residential Construction in Developing Regions

Holliday, L. and Kang, T. (2014). "Low-Cost Earthquake Solutions for Nonengineered Residential Construction in Developing Regions." J. Perform. Constr. Facil., 10.1061/(ASCE)CF.1943-5509.0000630, 04014141.

Permalink: http://dx.doi.org/10.1061/(ASCE)CF.1943-5509.0000630
Read More: http://ascelibrary.org/doi/10.1061/%28ASCE%29CF.1943-5509.0000630

Homeowner's Guide to Earthquake Safety
California Seismic Safety Commission, 2005 Edition, 49 p.
http://www.disclosuresource.com/downloads/earthquake.pdf

Retrofitting Questions and Answers
Earthquake Safety, Inc., 2015 (web based)
http://www.earthquakesafety.com/earthquake-retrofitting-faq.html

Cost and Seismic Design
https://www.google.com/#q=cost+and+seismic+design+christopher+arnold+pdf

Earthquake Architecture website
http://www.iitk.ac.in/nicee/wcee/article/14_05-06-0185.PDF

Cost Analyses and Benefit Studies for Earthquake-Resistant Construction in Memphis, Tennessee
NIST GCR 14-917-26 2013, 249 p. NEHRP Consultants Joint Venture A partnership of the Applied Technology Council and the Consortium of Universities for Research in Earthquake Engineering.

Cost Impact: Will increase the cost of construction

This proposal may or may not affect the cost of construction. This is (1) because detached one- and two-family dwellings must be already built to withstand the lateral forces due to wind; and (2) must include basements, "safe rooms"), or other afforded protections to protect occupants against the deadly impacts of hurricanes and tornadoes.

The point is; Detached one- and two-family need to consider the maximum Magnitude of realistric scenario earthquakes that they could, in fact, experience.

And not be constructed vulnerable to earthquakes, because a flawed numerical hazard model "guesses" incorrectly as to the likelihood or possibility of earthquakes. This should remain a rational and a scientific decision based upon protecting both public safety and property. A second point is that "cost" due to structural elements is almost always less than 80% of the cost of a building!

"In general, better seismic performance is achieved through increased lateral design forces (i.e., base shear), and detailing requirements that improve structural connection strength or structural member behavior in the inelastic range of response. Requirements for seismic bracing and anchorage of nonstructural components reduce potential for nonstructural damage and loss of building (or system) functionality."*

* viii, Executive Summary, NIST GCR 14-917-26
Cost Analyses and Benefit Studies for Earthquake-Resistant Construction in Memphis, Tennessee, 2013, 249 p.
NEHRP Consultants Joint Venture A partnership of the Applied Technology Council and the Consortium of Universities for Research in Earthquake Engineering.

In general, where costs might be increased, cost premiums above requirements for wind tend to fall within a range of +1-3%. For cases where seismic requirements would be now additional to what previous codes either applied/neglected/failed to enforce, estimates probably would fall within the range of 0.25 - 1%.

Analysis: See S118-16 fro IBC coordination proposal

RB18-16 : FIGURE R301.2-BELA13536

Public Hearing Results

Committee Action: **Disapproved**

Committee Reason: The maps being proposed impose a greater level of design on many communities that is not merited based on what we have learned from more recent events. There was no support given as the basis for the maps or how they were developed.

Assembly Motion: **As Submitted**
Online Vote Results: **Failed**
Support: 18.55% (46) Oppose: 81.45% (202)
Assembly Action: **None**

Individual Consideration Agenda

Proponent : James Bela, representing Oregon Earthquakie Awareness (sasquake@gmail.com) requests Approve as Submitted.

Commenter's Reason: ***"It is better to be right than to be consistent."***
- Winston Churchill

"If your definition is wrong, you'll look for the wrong thing."
- Carol Cleland

"Anyone who conducts an argument by appealing to authority is not using his intelligence; he is just using his memory." - Leonardo da Vinci

"Just because it comes from a consensus standard doesn't mean it isn't without problems."
- Jay Crandell

The Committee Reason for Disapproval is based on the **Logical Fallacies:** ***APPEAL to AUTHORITY; BEGGING the QUESTION (CIRCULAR REASONING); and STRAW MAN.***

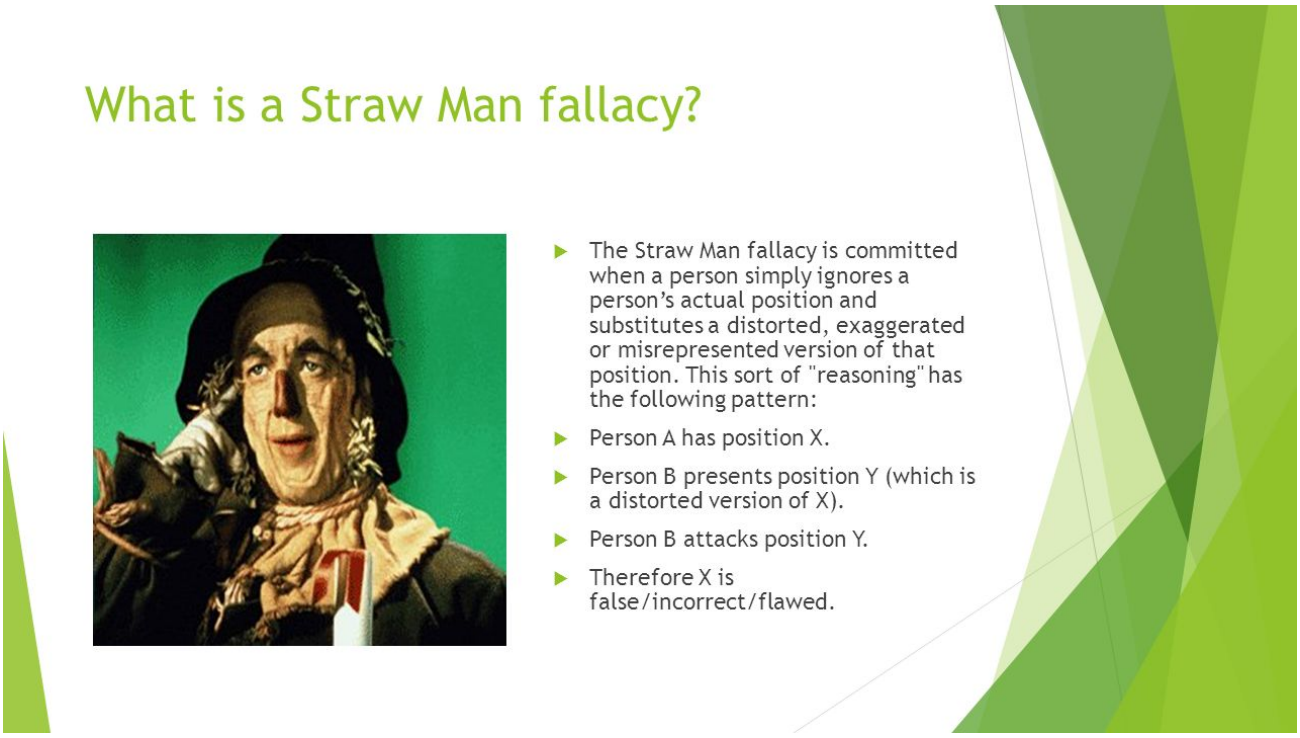

The Committee Reason is False and baseless. In fact, just the opposite has been documented in Reason Statement per RB18-16 and S118-16.

See further background and discussion under Public Comment S118-16

Bibliography: See **BIBLIOGRAPHY** under Publ;ic Comment S118-16

RB18-16

RB19-16
IRC: R301.2.

Proposed Change as Submitted

Proponent : T. Eric Stafford, PE, representing Institute for Business and Home Safety

2015 International Residential Code

Revise as follows:

FIGURE R301.2 (5)
GROUND SNOW LOADS, P_g , FOR THE UNITED STATES (lb/ft^2)

(Code figure not shown for clarity)

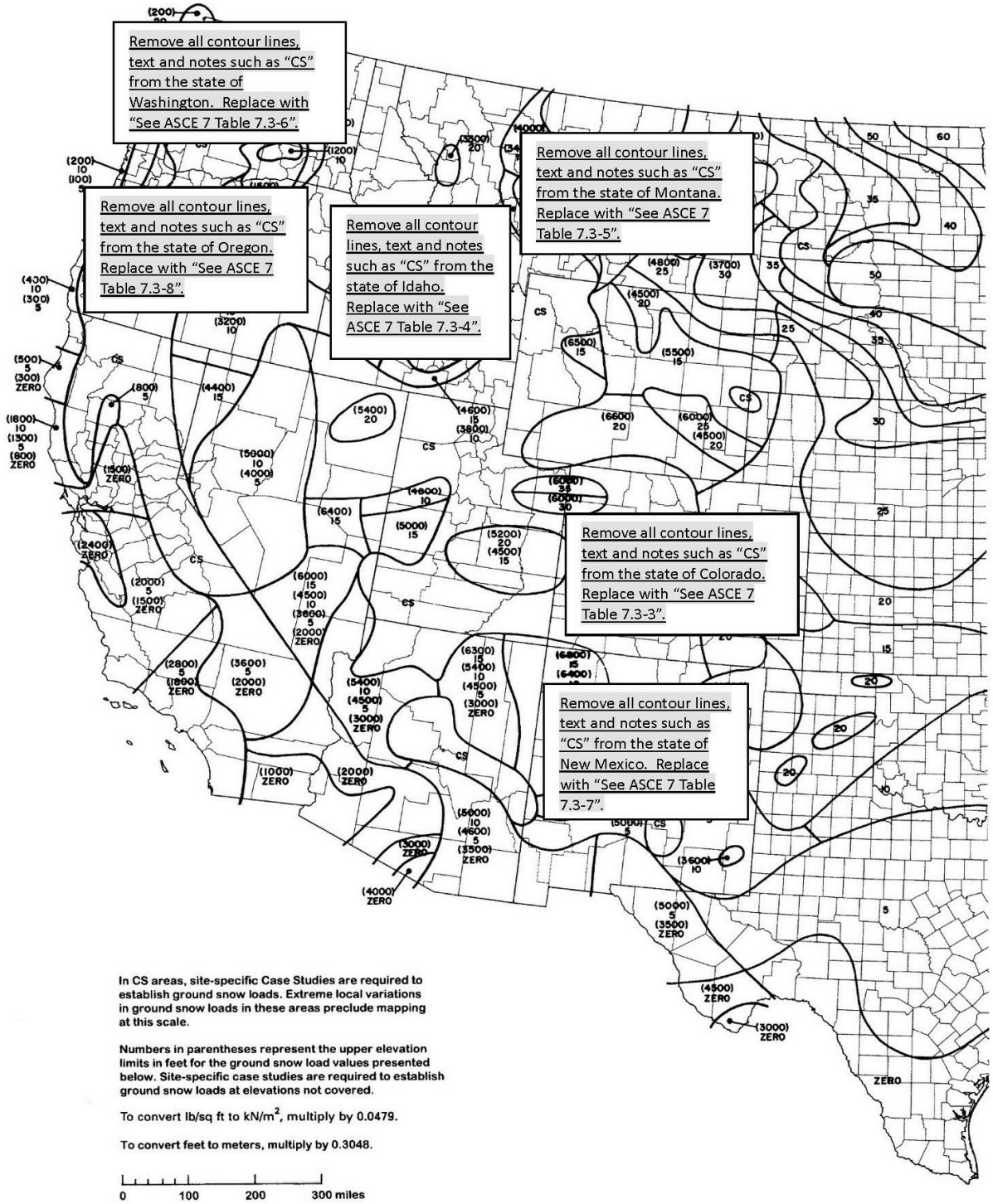

For SI: 1 foot = 304.8 mm, 1 pound per square foot = 0.0479 kPa, 1 mile = 1.61 km.

~~a. In CS areas, site-specific Case Studies are required to establish ground snow loads. Extreme local variations in ground snow loads in these areas preclude mapping at this scale.~~
~~b. Numbers in parentheses represent the upper elevation limits in feet for the ground snow load values presented below. Site-specific case studies are required to establish ground snow loads at elevations not covered.~~
NOTES: For state tables, see Chapter 7 of ASCE 7: See Table 7.3-3 for Colorado; See Table 7.3-4 for Idaho; See Table 7.3-5 for Montana; See Table 7.3-6 for Washington; See Table 7.3-7 for New Mexico; See Table 7.3-8 For Oregon

Reason: The current ASCE 7 committee has developed the 2016 edition of the standard to supplement the basic ground snow load map with an extensive database of ground snow loading data for individual cities in regions with highly variable climatic conditions associated with mountains and other factors. This data was assembled over a period of many years through the

efforts of regional experts and structural engineering associations with specialized knowledge in local climatic conditions and vetted by the Committee as having followed appropriate and consistent procedures. The revised map indicates which states have supplement data within the ASCE 7-16 standard.

Cost Impact: Will not increase the cost of construction
The proposed changes will not impact the cost of construction. This proposal coordinates the IRC with the referenced loading standard *ASCE 7 Minimum Design Loads and Associated Criteria for Buildings and Other Structures*. ASCE 7 will be updated from the 2010 edition to the 2016 edition as an Administrative Update to the 2018 I-Codes.

As of the submission date of this code change proposal, the ASCE 7 Standards Committee has completed the committee balloting on the technical changes. The document designated *ASCE 7 Minimum Design Loads and Associated Criteria for Buildings and Other Structures* is expected to be completed, published, and available for purchase prior to the ICC Public Comment Hearing for Group B in October 2016. Any person interested in obtaining a public comment copy of ASCE 7-16 may do so by contacting James Neckel at ASCE (jneckel@asce.org).

RB19-16 :
FIGURE R301.2-STAFFORD13110

Public Hearing Results

Committee Action: **Disapproved**

Committee Reason: The current map has been easy to use. The tabular data should be included in the IRC. It is harder to use the countours. There should be more information on the cost. It appears there would be a cost increase.

Assembly Action: **None**

Individual Consideration Agenda

Proponent : Scott Campbell, representing Portland Cement Association (scampbell@cement.org) requests Approve as Submitted.

Commenter's Reason: The proposed change brings the IRC in line with ASCE 7-16. The change from contours to tables is meant to more accurately reflect the current state of knowledge, and to make snow load calculation easier. The committee reasoning is contradictory. The committee agrees that the contours are hard to use, and that the tables should be included. Further, if the information were expressed in revised contours, the new maps would probably be accepted similarly the new seismic and wind maps. It is important to ensure that the IRC reflects the properly technically vetted snow load criteria developed in the ANSI accredited ASCE standards development process.

RB19-16

RB20-16
IRC: R301.2.

Proposed Change as Submitted

Proponent : T. Eric Stafford, PE, representing Institute for Business and Home Safety (testafford@charter.net)

2015 International Residential Code

Delete and substitute as follows:

FIGURE R301.2 (7)
COMPONENT AND CLADDING PRESSURE ZONES

(Existing code figure not shown for clarity)

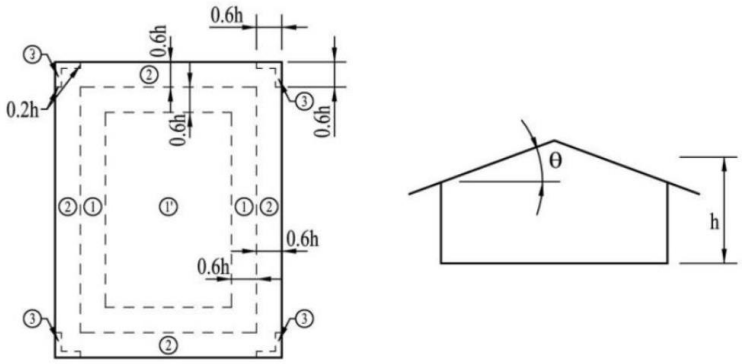

Gable and Flat Roofs θ ≤ 7°

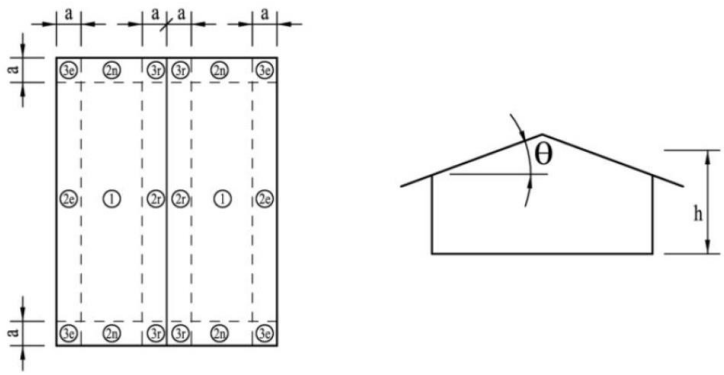

Gable Roofs 7 < θ ≤ 45°

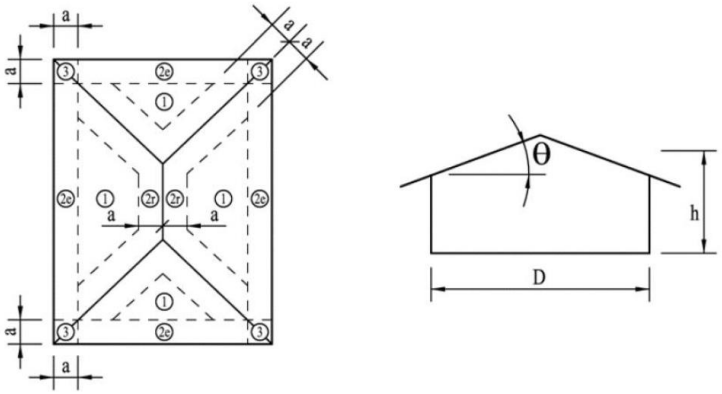

Gable Roofs 7 < θ ≤ 45°

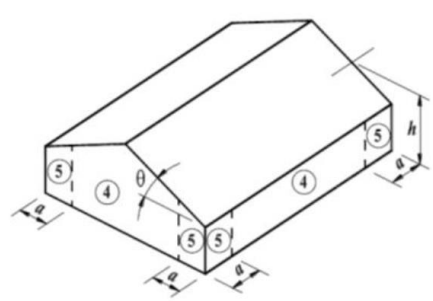

Walls

For SI: 1 foot = 304.8 mm, 1 degree = 0.0175 rad.

Note: a = 4 feet in all cases.

Revise as follows:

TABLE R301.2 (2)

COMPONENT AND CLADDING LOADS FOR A BUILDING WITH A MEAN ROOF HEIGHT OF 30 FEET LOCATED IN EXPOSURE B (ASD) (psf)[a, b, c, d, e , f]

	Zone	Effective Wind Areas (feet^2)	Ultimate Design Wind Speed, V_{ult}																							
			90		95		100		105		110		115		120		130		140		150		160		170		180	
			Pos	Neg	Pos	Neg	Pos	Neg	Pos	Neg	Pos	Neg	Pos	Neg	Pos	Neg	Pos	Neg	Pos	Neg	Pos	Neg	Pos	Neg	Pos	Neg	Pos	Neg

Flat and Gable Roof 0 to 7 degrees	1	10	3.6	-13.9	4.0	-15.5	4.4	-17.2	4.8	-19.0	5.3	-20.8	5.8	-22.7	6.3	-24.8	7.4	-29.1	8.6	-33.7	9.9	-38.7	11.2	-44.0	12.7	-49.7	14.2	-55.7
	1	20	3.3	-12.4	3.7	-13.8	4.1	-15.3	4.5	-16.8	5.0	-18.5	5.4	-20.2	5.9	-22.0	7.0	-25.8	8.1	-29.9	9.3	-34.4	10.5	-39.1	11.9	-44.1	13.3	-49.5
	1	50	3.0	-10.3	3.4	-11.5	3.8	-12.7	4.1	-14.0	4.5	-15.4	5.0	-16.8	5.4	-18.3	6.3	-21.5	7.4	-24.9	8.4	-28.6	9.6	-32.5	10.8	-36.7	12.2	-41.2
	1	100	2.8	-8.7	3.1	-9.7	3.5	-10.8	3.8	-11.9	4.2	-13.1	4.6	-14.3	5.0	-15.5	5.9	-18.2	6.8	-21.2	7.8	-24.3	8.9	-27.6	10.0	-31.2	11.3	-35.0
	2	10	3.6	-18.4	4.0	-20.5	4.4	-22.7	4.8	-25.0	5.3	-27.4	5.8	-30.0	6.3	-32.7	7.4	-38.3	8.6	-44.5	9.9	-51.0	11.2	-58.1	12.7	-65.6	14.2	-73.5
	2	20	3.3	-16.4	3.7	-18.2	4.1	-20.2	4.5	-22.3	5.0	-24.5	5.4	-26.7	5.9	-29.1	7.0	-34.2	8.1	-39.6	9.3	-45.5	10.5	-51.8	11.9	-58.4	13.3	-65.5
	2	50	3.0	-13.7	3.4	-15.3	3.8	-16.9	4.1	-18.7	4.5	-20.5	5.0	-22.4	5.4	-24.4	6.3	-28.6	7.4	-33.2	8.4	-38.1	9.6	-43.3	10.8	-48.9	12.2	-54.8
	2	100	2.8	-11.7	3.1	-13.0	3.5	-14.5	3.8	-15.9	4.2	-17.5	4.6	-19.1	5.0	-20.8	5.9	-24.4	6.8	-28.3	7.8	-32.5	8.9	-37.0	10.0	-41.8	11.3	-46.8
	3	10	3.6	-25.0	4.0	-27.9	4.4	-30.9	4.8	-34.1	5.3	-37.4	5.8	-40.9	6.3	-44.5	7.4	-52.2	8.6	-60.6	9.9	-69.6	11.2	-79.1	12.7	-89.4	14.2	-100.2
	3	20	3.3	-21.0	3.7	-23.4	4.1	-26.0	4.5	-28.6	5.0	-31.4	5.4	-34.4	5.9	-37.4	7.0	-43.9	8.1	-50.9	9.3	-58.4	10.5	-66.5	11.9	-75.1	13.3	-84.2
	3	50	3.0	-15.7	3.4	-17.5	3.8	-19.4	4.1	-21.4	4.5	-23.5	5.0	-25.6	5.4	-27.9	6.3	-32.8	7.4	-38.0	8.4	-43.6	9.6	-49.6	10.8	-56.0	12.2	-62.8
	3	100	2.8	-11.7	3.1	-13.0	3.5	-14.5	3.8	-15.9	4.2	-17.5	4.6	-19.1	5.0	-20.8	5.9	-24.4	6.8	-28.3	7.8	-32.5	8.9	-37.0	10.0	-41.8	11.3	-46.8
Gable Roof > 7 to 20 degrees	1, 2e	10	6.5	-16.2	7.3	-18.0	8.0	-19.9	8.9	-22.0	9.7	-24.1	10.6	-26.4	11.6	-28.7	13.6	-33.7	15.8	-39.1	18.1	-44.9	20.6	-51.0	23.3	-57.6	26.1	-64.6
	1, 2e	20	5.6	-16.2	6.3	-18.0	7.0	-19.9	7.7	-22.0	8.4	-24.1	9.2	-26.4	10.0	-28.7	11.7	-33.7	13.6	-39.1	15.6	-44.9	17.8	-51.0	20.1	-57.6	22.5	-64.6
	1, 2e	50	4.4	-9.9	5.0	-11.0	5.5	-12.2	6.1	-13.4	6.6	-14.7	7.3	-16.1	7.9	-17.5	9.3	-20.6	10.8	-23.8	12.3	-27.4	14.0	-31.1	15.9	-35.2	17.8	-39.4
	1, 2e	100	3.6	-5.0	4.0	-5.6	4.4	-6.2	4.8	-6.9	5.3	-7.5	5.8	-8.2	6.3	-9.0	7.4	-10.5	8.6	-12.2	9.9	-14.0	11.2	-15.9	12.7	-18.0	14.2	-20.2
	2n, 2r, 3e	10	6.5	-23.6	7.3	-26.3	8.0	-29.1	8.9	-32.1	9.7	-35.2	10.6	-38.5	11.6	41.9 -	13.6	-49.2	15.8	-57.0	18.1	-65.4	20.6	-74.5	23.3	-84.1	26.1	-94.2
	2n, 2r, 3e	20	5.6	-20.3	6.3	-22.7	7.0	-25.1	7.7	-27.7	8.4	-30.4	9.2	-33.2	10.0	-36.2	11.7	-42.4	13.6	-49.2	15.6	-56.5	17.8	-64.3	20.1	-72.6	22.5	-81.4
	2n, 2r, 3e	50	4.4	-16.0	5.0	-17.9	5.5	-19.8	6.1	-21.8	6.6	-24.0	7.3	-26.2	7.9	-28.5	9.3	-33.5	10.8	-38.8	12.3	-44.6	14.0	-50.7	15.9	-57.2	17.8	-64.2
	2n, 2r, 3e	100	3.6	-12.8	4.0	-14.3	4.4	-15.8	4.8	-17.4	5.3	-19.1	5.8	-20.9	6.3	-22.8	7.4	-26.7	8.6	-31.0	9.9	-35.6	11.2	-40.5	12.7	-45.7	14.2	-51.3
	3r	10	6.5	-28.0	7.3	-31.2	8.0	-34.6	8.9	-38.1	9.7	-41.8	10.6	-45.7	11.6	-49.8	13.6	-58.4	15.8	-67.8	18.1	-77.8	20.6	-88.5	23.3	-99.9	26.1	-112.0
	3r	20	5.6	-24.0	6.3	-26.7	7.0	-29.6	7.7	-32.7	8.4	-35.9	9.2	-39.2	10.0	-42.7	11.7	-50.1	13.6	-58.1	15.6	-66.7	17.8	-75.9	20.1	-85.6	22.5	-96.0
	3r	50	4.4	-18.7	5.0	-20.8	5.5	-23.1	6.1	-25.4	6.6	-27.9	7.3	30.5 -	7.9	-33.2	9.3	-39.0	10.8	-45.2	12.3	-51.9	14.0	-59.0	15.9	-66.6	17.8	-74.7
	3r	100	3.6	-14.7	4.0	-16.3	4.4	-18.1	4.8	-20.0	5.3	-21.9	5.8	-24.00	6.3	-26.1	7.4	-30.6	8.6	-35.5	9.9	-40.8	11.2	-46.4	12.7	-52.3	14.2	-58.7
Gable Roof > 20 to 27 degrees	1, 2e	10	6.5	-12.4	7.3	-13.9	8.0	-15.4	8.9	-16.9	9.7	-18.6	10.6	-20.3	11.6	-22.1	13.6	-26.0	15.8	-30.1	18.1	-34.6	20.6	-39.3	23.3	-44.4	26.1	-49.9
	1, 2e	20	5.6	-12.4	6.3	-13.9	7.0	-15.4	7.7	-16.9	8.4	-18.6	9.2	-20.3	10.0	-22.1	11.7	-26.0	13.6	-30.1	15.6	-34.6	17.8	-39.3	20.1	-44.4	22.5	-49.8
	1, 2e	50	4.4	-10.6	5.0	-11.8	5.5	-13.1	6.1	-14.4	6.6	-15.8	7.3	-17.3	7.9	-18.8	9.3	-22.1	10.8	-25.6	12.3	-29.4	14.0	-33.5	15.9	-37.8	17.8	-42.4
	1, 2e	100	3.6	-9.1	4.0	-10.2	4.4	-11.3	4.8	-12.4	5.3	-13.6	5.8	-14.9	6.3	-16.2	7.4	-19.0	8.6	-22.1	9.9	-25.3	11.2	-28.8	12.7	-32.5	14.2	-36.5
	2n, 2r, 3e	10	6.5	-19.9	7.3	-22.1	8.0	-24.5	8.9	-27.0	9.7	-29.7	10.6	-32.4	11.6	-35.3	13.6	-41.4	15.8	-48.0	18.1	-55.2	20.6	-62.8	23.3	-70.8	26.1	-79.4
	2n, 2r, 3e	20	5.6	-17.4	6.3	-19.4	7.0	-21.5	7.7	-23.7	8.4	-26.0	9.2	-28.4	10.0	-31.0	11.7	-36.3	13.6	-42.1	15.6	-48.4	17.8	-55.0	20.1	-62.1	22.5	-69.6

	2n, 2r, 3e	50	4.4	-14.2	5.0	-15.8	5.5	-17.5	6.1	-19.3	6.6	-21.1	7.3	-23.1	7.9	-25.2	9.3	-29.5	10.8	-34.2	12.3	-39.3	14.0	-44.7	15.9	-50.5	17.8	-56.6
	2n, 2r, 3e	100	3.6	-11.7	4.0	-13.0	4.4	-14.5	4.8	-15.9	5.3	-17.5	5.8	-19.1	6.3	-20.8	7.4	-24.4	8.6	-28.3	9.9	-32.5	11.2	-37.0	12.7	-41.8	14.2	-46.8
	3r	10	6.5	-23.6	7.3	-26.3	8.0	-29.1	8.9	-32.1	9.7	-35.2	10.6	-38.5	11.6	-41.9	13.6	-49.2	15.8	-57.0	18.1	-65.4	20.6	-74.5	23.3	-84.1	26.1	-94.2
	3r	20	5.6	-19.9	6.3	-22.1	7.0	-24.5	7.7	-27.0	8.4	-29.7	9.2	-32.4	10.0	-35.3	11.7	-41.4	13.6	-48.0	15.6	-55.2	17.8	-62.8	20.1	-70.8	22.5	-79.4
	3r	50	4.4	-14.7	5.0	-16.3	5.5	-18.1	6.1	-20.0	6.6	-21.9	7.3	-24.0	7.9	-26.1	9.3	-30.6	10.8	-35.5	12.3	-40.8	14.0	-46.4	15.9	-52.3	17.8	-58.7
	3r	100	3.6	-14.7	4.0	-16.3	4.4	-18.1	4.8	-20.0	5.3	-21.9	5.8	-24.0	6.3	-26.1	7.4	-30.6	8.6	-35.5	9.9	-40.8	11.2	-46.4	12.7	-52.3	14.2	-58.7
Gable Roof > 27 to 45 degrees	1, 2e, 2r	10	8.0	-14.7	8.9	-16.3	9.9	-18.1	10.9	-20.0	12.0	-21.9	13.1	-24.0	14.2	-26.1	16.7	-30.6	19.4	-35.5	22.2	-40.8	25.3	-46.4	28.5	-52.3	32.0	-58.7
	1, 2e, 2r	20	7.1	-12.4	7.9	-13.9	8.8	-15.4	9.7	-16.9	10.6	-18.6	11.6	-20.3	12.6	-22.1	14.8	-26.0	17.2	-30.1	19.8	-34.6	22.5	-39.3	25.4	-44.4	28.5	-49.8
	1, 2e, 2r	50	5.9	-9.5	6.6	-10.6	7.3	-11.7	8.1	-12.9	8.9	-14.2	9.7	-15.5	10.5	-16.9	12.4	-19.8	14.3	-22.9	16.5	-26.3	18.7	-30.0	21.1	-33.8	23.7	-37.9
	1, 2e, 2r	100	5.0	-7.3	5.6	-8.1	6.2	-9.0	6.9	-9.9	7.5	-10.8	8.2	-11.9	9.0	-12.9	10.5	-15.1	12.2	-17.6	14.0	-20.2	15.9	-22.9	18.0	-25.9	20.2	-29.0
	2n, 3r	10	8.0	-16.2	8.9	-18.0	9.9	-19.9	10.9	-22.0	12.0	-24.1	13.1	-26.4	14.2	-28.7	16.7	-33.7	19.4	-39.1	22.2	-44.9	25.3	-51.0	28.5	-57.6	32.0	-64.6
	2n, 3r	20	7.1	-14.4	7.9	-16.1	8.8	-17.8	9.7	-19.7	10.6	-21.6	11.6	-23.6	12.6	-25.7	14.8	-30.1	17.2	-34.9	19.8	-40.1	22.5	-45.6	25.4	-51.5	28.5	-57.8
	2n, 3r	50	5.9	-12.2	6.6	-13.5	7.3	-15.0	8.1	-16.5	8.9	-18.2	9.7	-19.9	10.5	-21.6	12.4	-25.4	14.3	-29.4	16.5	-33.8	18.7	-38.4	21.1	-43.4	23.7	-48.6
	2n, 3r	100	5.0	-10.4	5.6	-11.6	6.2	-12.9	6.9	-14.2	7.5	-15.6	8.2	-17.1	9.0	-18.6	10.5	-21.8	12.2	-25.3	14.0	-29.0	15.9	-33.0	18.0	-37.3	20.2	-41.8
	3e	10	8.0	-19.9	8.9	-22.1	9.9	-24.5	10.9	-27.0	12.0	-29.7	13.1	-32.4	14.2	-35.3	16.7	-41.4	19.4	-48.0	22.2	-55.2	25.3	-62.8	28.8	-70.8	32.0	-79.4
	3e	20	7.1	-17.6	7.9	-19.6	8.8	-21.8	9.7	-24.0	10.6	-26.3	11.6	-28.8	12.6	-31.3	14.8	-36.8	17.2	-42.7	19.8	-49.0	22.5	-55.7	25.4	-62.9	28.5	-70.5
	3e	50	5.9	-14.7	6.6	-16.3	7.3	-18.1	8.1	-20.0	8.9	-21.9	9.7	-24.0	10.5	-26.1	12.4	-30.6	14.3	-35.5	16.6	-40.8	18.7	-46.4	21.1	-52.3	23.7	-58.7
	3e	100	5.0	-12.4	5.6	-13.9	6.2	-15.4	6.9	-16.9	7.5	-18.6	8.2	-20.3	9.0	-22.1	10.5	-26.0	12.2	-30.1	14.0	-34.6	15.9	-39.3	18.0	-44.4	20.2	-49.8
Hipped Roof > 7 to 20 degrees[g]	1	10	6.5	-14.7	7.3	-16.3	8.0	-18.1	8.9	-20.0	9.7	-21.9	10.6	-24.0	11.6	-26.1	13.6	-30.6	15.8	-35.5	18.1	-40.8	20.6	-46.4	23.3	-52.3	26.1	-58.7
	1	20	5.6	-14.7	6.3	-16.3	7.0	-18.1	7.7	-20.0	8.4	-21.9	9.2	-24.0	10.0	-26.1	11.7	-30.6	13.6	-35.5	15.6	-40.8	17.8	-46.4	20.1	-52.3	22.5	-58.7
	1	50	4.4	-11.3	5.0	-12.6	5.5	-14.0	6.1	-15.4	6.6	-16.9	7.3	-18.5	7.9	-20.2	9.3	-23.7	10.8	-27.4	12.3	-31.5	14.0	-35.8	15.9	-40.4	17.8	-45.3
	1	100	3.6	-8.7	4.0	-9.7	4.4	-10.8	4.8	-11.9	5.3	-13.1	5.8	-14.3	6.3	-15.5	7.4	-18.2	8.6	-21.2	9.9	-24.3	11.2	-27.6	12.7	-31.2	14.2	-35.0
	2r	10	6.5	-19.1	7.3	-21.3	8.0	-23.6	8.9	-26.0	9.7	-28.6	10.6	-31.2	11.6	-34.0	13.6	-39.9	15.8	-46.3	18.1	-53.1	20.6	-60.4	23.3	-68.2	26.1	-76.5
	2r	20	5.6	-17.2	6.3	-19.2	7.0	-21.3	7.7	-23.4	8.4	-25.7	9.2	-28.1	10.0	-30.6	11.7	-35.9	13.6	-41.7	15.6	-47.9	17.8	-54.4	20.1	-61.5	22.5	-68.9
	2r	50	4.4	-14.7	5.0	-16.4	5.5	-18.2	6.1	20.0 -	6.6	-22.0	7.3	-24.0	7.9	-26.1	9.3	-30.7	10.8	-35.6	12.3	-40.9	14.0	-46.5	15.9	-52.5	17.8	-58.8
	2r	100	3.6	-12.8	4.0	-14.3	4.4	-15.8	4.8	-17.4	5.3	-19.1	5.8	-20.9	6.3	-22.8	7.4	-26.7	8.6	-31.0	9.9	-35.6	11.2	-40.5	12.7	-45.7	14.2	-51.3
	2e, 3	10	6.5	-20.6	7.3	-22.9	8.0	-25.4	8.9	-28.0	9.7	-30.8	10.6	-33.6	11.6	-36.6	13.6	-43.0	15.8	-49.8	18.1	-57.2	20.6	-65.1	23.3	-73.5	26.1	-82.4
	2e, 3	20	5.6	-18.5	6.3	-20.6	7.0	-22.9	7.7	-25.2	8.4	-27.7	9.2	-30.3	10.0	-32.9	11.7	-38.7	13.6	-44.8	15.6	-51.5	17.8	-58.6	20.1	-66.1	22.5	-74.1

	2e, 3	50	4.4	-15.8	5.0	-17.6	5.5	-19.5	6.1	-21.5	6.6	-23.6	7.3	-25.8	7.9	-28.0	9.3	-32.9	10.8	-38.2	12.3	-43.8	14.0	-49.9	15.9	-56.3	17.8	-63.1
	2e, 3	100	3.6	-13.7	4.0	-15.3	4.0	-16.9	4.8	-18.7	5.3	-20.5	5.8	-22.4	6.3	-24.4	7.4	-28.6	8.6	-33.2	9.9	-38.1	11.2	-43.3	12.7	-48.9	14.2	-54.8
Hipped Roof > 20 to 27 degrees	1	10	6.5	-11.7	7.3	-13.0	8.0	-14.5	8.9	-15.9	9.7	-17.5	10.6	-19.1	11.6	-20.8	13.6	-24.4	15.8	-28.3	18.1	-32.5	20.6	-37.0	23.3	-41.8	26.1	-46.8
	1	20	5.6	-10.4	6.3	-11.6	7.0	-12.8	7.7	-14.1	8.4	-15.5	9.2	-16.9	10.0	-18.4	11.7	-21.6	13.6	-25.1	15.6	-28.8	17.8	-32.8	20.1	-37.0	22.5	-41.5
	1	50	4.4	-8.6	5.0	-9.6	5.5	-10.6	6.1	-11.7	6.6	-12.8	7.3	-14.0	7.9	-15.3	9.3	-17.9	10.8	-20.8	12.3	-23.9	14.0	-27.2	15.9	-30.7	17.8	-34.4
	1	100	3.6	-7.3	4.0	-8.1	4.4	-9.0	4.8	-9.9	5.3	-10.8	5.8	-11.9	6.3	-12.9	7.4	-15.1	8.6	-17.6	9.9	-20.2	11.2	-22.9	12.7	-25.9	14.2	-29.0
	2e, 2r, 3	10	6.5	-16.2	7.3	-18.0	8.0	-19.9	8.9	-22.0	9.7	-24.1	10.6	-26.4	11.6	-28.7	13.6	-33.7	15.8	-39.1	18.1	-44.9	20.6	-51.0	23.3	-57.6	26.1	-64.6
	2e, 2r, 3	20	5.6	-14.4	6.3	-16.1	7.0	-17.8	7.7	-19.7	8.4	-21.6	9.2	-23.6	10.0	-25.7	11.7	-30.1	13.6	-34.9	15.6	-40.1	17.8	-45.6	20.1	-51.5	22.5	-57.8
	2e, 2r, 3	50	4.4	-12.2	5.0	-13.5	5.5	-15.0	6.1	-16.5	6.6	-18.2	7.3	-19.9	7.9	-21.6	9.3	-25.4	10.8	-29.4	12.3	-33.8	14.0	-38.4	15.9	-43.4	17.8	-48.6
	2e, 2r, 3	100	3.6	-10.4	4.0	-11.6	4.4	-12.9	4.8	-14.2	5.3	-15.6	5.8	-17.1	6.3	-18.6	7.4	-21.8	8.6	-25.3	9.9	-29.0	11.2	-33.0	12.7	-37.3	14.2	-41.8
Hipped Roof > 27 to 45 degrees	1	10	6.2	-12.4	6.9	-13.9	7.7	-15.4	8.5	-16.9	9.3	-18.6	10.2	-20.3	11.1	-22.1	13.0	-26.0	15.1	-30.1	17.3	-34.6	19.7	-39.3	22.2	-44.4	24.9	-49.8
	1	20	5.4	-11.0	6.0	-12.3	6.7	-13.6	7.4	-15.0	8.1	-16.5	8.9	-18.0	9.6	-19.6	11.3	-23.0	13.1	-26.7	15.1	-30.7	17.1	-34.9	19.4	-39.4	21.7	-44.2
	1	50	4.4	-9.2	4.9	-10.2	5.4	-11.3	5.9	-12.5	6.5	-13.7	7.1	-15.0	7.7	-16.3	9.1	-19.2	10.5	-22.2	12.1	-25.5	13.8	-29.0	15.5	-32.8	17.4	-36.7
	1	100	3.6	-7.8	4.0	-8.7	4.4	-9.6	4.8	-10.6	5.3	-11.6	5.8	-12.7	6.3	-13.8	7.4	-16.2	8.6	-18.8	9.9	-21.6	11.2	-24.6	12.7	-27.8	14.2	-31.1
	2e	10	6.2	-14.8	6.9	-16.5	7.7	-18.3	8.5	-20.2	9.3	-22.1	10.2	-24.2	11.1	-26.3	13.0	-30.9	15.1	-35.9	17.3	-41.2	19.7	-46.8	22.2	-52.9	24.9	-59.3
	2e	20	5.4	-11.7	6.0	-13.0	6.7	-14.5	7.4	-15.9	8.1	-17.5	8.9	-19.1	9.6	-20.8	11.3	-24.4	13.1	-28.3	15.1	-32.5	17.1	-37.0	19.4	-41.8	21.7	-46.8
	2e	50	4.4	-7.3	4.9	-8.1	5.4	-9.0	5.9	-9.9	6.5	-10.8	7.1	-11.9	7.7	-12.9	9.1	-15.1	10.5	-17.6	12.1	-20.2	13.8	-22.9	15.5	-25.9	17.4	-29.0
	2e	100	3.6	-7.3	4.0	-8.1	4.4	-9.0	4.8	-9.9	5.3	-10.8	5.8	-11.9	6.3	-12.9	7.4	-15.1	8.6	-17.6	9.9	-20.2	11.2	-22.9	12.7	-25.9	14.2	-29.0
	2r	10	6.2	-18.7	6.9	-20.9	7.7	-23.1	8.5	-25.5	9.3	-28.0	10.2	-30.6	11.1	-33.3	13.0	-39.1	15.1	-45.4	17.3	-52.1	19.7	-59.2	22.2	-66.9	24.9	-75.0
	2r	20	5.4	-15.7	6.0	-17.5	6.7	-19.4	7.4	-21.4	8.1	-23.5	8.9	-25.7	9.6	-28.0	11.3	-32.8	13.1	-38.1	15.1	-43.7	17.1	-49.8	19.4	-56.2	21.7	-63.0
	2r	50	4.4	-11.7	4.9	-13.1	5.4	-14.5	5.9	-16.0	6.5	-17.5	7.1	-19.2	7.7	-20.9	9.1	-24.5	10.5	-28.4	12.1	-32.6	13.8	-37.1	15.5	-41.9	17.4	-47.0
	2r	100	3.6	-8.7	4.0	-9.7	4.4	-10.8	4.8	-11.9	5.3	-13.1	5.8	-14.3	6.3	-15.5	7.4	-18.2	8.6	-21.2	9.9	-24.3	11.2	-27.6	12.7	31.2 -	14.2	-35.0
	3	10	6.2	-20.0	6.9	-22.3	7.7	-24.7	8.5	-27.2	9.3	-29.9	10.2	-32.7	11.1	-35.6	13.0	-41.7	15.1	-48.4	17.3	-55.6	19.7	-63.2	22.2	-71.4	24.9	-80.0
	3	20	5.4	-15.0	6.0	-16.8	6.7	-18.6	7.4	-20.5	8.1	-22.5	8.9	-24.6	9.6	-26.7	11.3	-31.4	13.1	-36.4	15.1	-41.8	17.1	-47.5	19.4	-53.7	21.7	-60.2
	3	50	4.4	-8.7	4.9	-9.7	5.4	-10.8	5.9	-11.9	6.5	-13.1	7.1	-14.3	7.7	-15.5	9.1	-18.2	10.5	-21.2	12.1	-24.3	13.8	-27.6	15.5	-31.2	17.4	-35.0
	3	100	3.6	-8.7	4.0	-9.7	4.4	-10.8	4.8	-11.9	5.3	-13.1	5.8	-14.3	6.3	-15.5	7.4	-18.2	8.6	-21.2	9.9	-24.3	11.2	-27.6	12.7	-31.2	14.2	-35.0
Wall	4	10	8.7	-9.5	9.7	-10.6	10.8	-11.7	11.9	-12.9	13.1	-14.2	14.3	-15.5	15.5	-16.9	18.2	-19.8	21.2	-22.9	24.3	-26.3	27.6	-30.0	31.2	-33.8	35.0	-37.9
	4	20	8.3	-9.1	9.3	-10.1	10.3	-11.2	11.4	-12.4	12.5	-13.6	13.6	-14.8	14.8	-16.2	17.4	-19.0	20.2	-22.0	23.2	-25.3	26.4	-28.7	29.8	-32.4	33.4	-36.4
	4	50	7.8	-8.6	8.7	-9.5	9.7	-10.6	10.7	-11.7	11.7	-12.8	12.8	-14.0	13.9	-15.2	16.3	-17.9	18.9	-20.7	21.7	-23.8	24.7	-27.1	27.9	-30.6	31.3	-34.3
	4	100	7.4	-8.2	8.3	-9.1	9.2	-10.1	10.1	-11.1	11.1	-12.2	12.1	-13.3	13.2	-14.5	15.5	-17.1	18.0	-19.8	20.6	-22.7	23.5	-25.8	26.5	-29.2	29.7	-32.7
	4	500	6.5	-7.3	7.3	-8.1	8.0	-9.0	8.9	-9.9	9.7	-10.8	10.6	-11.9	11.6	-12.9	13.6	-15.1	15.8	-17.6	18.1	-20.2	20.6	-22.9	23.3	-25.9	26.1	-29.0
	5	10	8.7	-11.7	9.7	-13.0	10.8	-14.5	11.9	-15.9	13.1	-17.5	14.3	-19.1	15.5	-20.8	18.2	-24.4	21.2	-28.3	24.3	-32.5	27.6	-37.0	31.2	-41.8	35.0	-46.8

	5	20	8.3	-10.9	9.3	-12.2	10.3	-13.5	11.4	-14.9	12.5	-16.3	13.6	-17.8	14.8	-19.4	17.4	-22.8	20.2	-26.4	23.2	-30.3	26.4	-34.5	29.8	-39.0	33.4	-43.7
	5	50	7.8	-9.9	8.7	-11.0	9.7	-12.2	10.7	-13.4	11.7	-14.7	12.8	-16.1	13.9	-17.5	16.3	-20.6	18.9	-23.9	21.7	-27.4	24.7	-31.2	27.9	-35.2	31.3	-39.5
	5	100	7.4	-9.1	8.3	-10.1	9.2	-11.2	10.1	-12.4	11.1	-13.6	12.1	-14.8	13.2	-16.1	15.5	-19.0	18.0	-22.0	20.6	-25.2	23.5	-28.7	26.5	-32.4	29.7	-36.3
	5	500	6.5	-7.3	7.3	-8.1	8.0	-9.0	8.9	-9.9	9.7	-10.8	10.6	-11.9	11.6	-12.9	13.6	-15.1	15.8	-17.6	18.1	-20.2	20.6	-22.9	23.3	-25.9	26.1	-29.0

	ZONE	EFFECTIVE WIND AREA (feet^2)	ULTIMATE DESIGN WIND SPEED, V_{ULT} (mph)																			
			110		115		120		130		140		150		160		170		180	
Roof 0 to 7 degrees	1	10	10.0	-13.0	10.0	-14.0	10.0	-15.0	10.0	-18.0	10.0	-21.0	9.9	-24.0	11.2	-27.0	12.6	-31.0	14.2	-35.0
	1	20	10.0	-12.0	10.0	-13.0	10.0	-15.0	10.0	-17.0	10.0	-20.0	9.2	-23.0	10.6	-26.0	11.9	-30.0	13.3	-34.1
	1	50	10.0	-12.0	10.0	-13.0	10.0	-14.0	10.0	-17.0	10.0	-19.0	8.5	-22.0	10.0	-26.0	10.8	-29.0	12.2	-32.9
	1	100	10.0	-11.0	10.0	-13.0	10.0	-14.0	10.0	-16.0	10.0	-19.0	7.8	-22.0	10.0	-25.0	10.0	-28.0	11.3	-32.0
	2	10	10.0	-21.0	10.0	-23.0	10.0	-26.0	10.0	-30.0	10.0	-35.0	9.9	-40.0	11.2	-46.0	12.6	-52.0	14.2	-58.7
	2	20	10.0	-19.0	10.0	-21.0	10.0	-23.0	10.0	-27.0	10.0	-31.0	9.2	-36.0	10.6	-41.0	11.9	-46.0	13.3	-52.4
	2	50	10.0	-16.0	10.0	-18.0	10.0	-19.0	10.0	-23.0	10.0	-26.0	8.5	-30.0	10.0	-34.0	10.8	-39.0	12.2	-44.1
	2	100	10.0	-14.0	10.0	-15.0	10.0	-16.0	10.0	-19.0	10.0	-22.0	7.8	-26.0	10.0	-30.0	10.0	-33.0	11.3	-37.9
	3	10	10.0	-33.0	10.0	-36.0	10.0	-39.0	10.0	-46.0	10.0	-53.0	9.9	-61.0	11.2	-69.0	12.6	-78.0	14.2	-88.3
	3	20	10.0	-27.0	10.0	-29.0	10.0	-32.0	10.0	-38.0	10.0	-44.0	9.2	-50.0	10.6	-57.0	11.9	-65.0	13.3	-73.1
	3	50	10.0	-19.0	10.0	-21.0	10.0	-23.0	10.0	-27.0	10.0	-32.0	8.5	-36.0	10.0	-41.0	10.8	-47.0	12.2	-53.1
	3	100	10.0	-14.0	10.0	-15.0	10.0	-16.0	10.0	-19.0	10.0	-22.0	7.8	-26.0	10.0	-30.0	10.0	-33.0	11.3	-37.9
Roof > 7 to 27 degrees	1	10	10.0	-11.0	10.0	-13.0	10.0	-14.0	10.5	-16.0	12.2	-19.0	14.0	-22.0	15.9	-25.0	17.9	-28.0	20.2	-32.0
	1	20	10.0	-11.0	10.0	-12.0	10.0	-13.0	10.0	-16.0	11.1	-18.0	12.8	-21.0	14.5	-24.0	16.4	-27.0	18.4	-31.1
	1	50	10.0	-11.0	10.0	-12.0	10.0	-13.0	10.0	-15.0	10.0	-18.0	11.1	-20.0	12.7	-23.0	14.3	-26.0	16.0	-29.9
	1	100	10.0	-10.0	10.0	-11.0	10.0	-12.0	10.0	-15.0	10.0	-17.0	9.9	-20.0	11.2	-22.0	12.6	-25.0	14.2	-29.0
	2	10	10.0	-20.0	10.0	-22.0	10.0	-24.0	10.5	-29.0	12.2	-33.0	14.0	-38.0	15.9	-44.0	17.9	-49.0	20.2	-55.8
	2	20	10.0	-19.0	10.0	-20.0	10.0	-22.0	10.0	-26.0	11.1	-31.0	12.8	-35.0	14.5	-40.0	16.4	-45.0	18.4	-51.2
	2	50	10.0	-16.0	10.0	-18.0	10.0	-20.0	10.0	-23.0	10.0	-27.0	11.1	-31.0	12.7	-35.0	14.3	-40.0	16.0	-45.4
	2	100	10.0	-15.0	10.0	-16.0	10.0	-18.0	10.0	-21.0	10.0	-24.0	9.9	-28.0	11.2	-32.0	12.6	-36.0	14.2	-40.9
	3	10	10.0	-30.0	10.0	-33.0	10.0	-36.0	10.5	-43.0	12.2	-49.0	14.0	-57.0	15.9	-65.0	17.9	-73.0	20.2	-82.4
	3	20	10.0	-28.0	10.0	-31.0	10.0	-34.0	10.0	-40.0	11.1	-46.0	12.8	-53.0	14.5	-60.0	16.4	-68.0	18.4	-77.0
	3	50	10.0	-26.0	10.0	-28.0	10.0	-31.0	10.0	-36.0	10.0	-42.0	11.1	-48.0	12.7	-55.0	14.3	-62.0	16.0	-69.9
	3	100	10.0	-24.0	10.0	-26.0	10.0	-28.0	10.0	-33.0	10.0	-39.0	9.9	-44.0	11.2	-51.0	12.6	-57.0	14.2	-64.6
	1	10	11.9	-13.0	13.1	-14.0	14.2	-15.0	16.7	-18.0	19.4	-21.0	22.2	-24.0	25.3	-27.0	28.5	-31.0	32.0	-35.0
	1	20	11.6	-12.0	12.7	-13.0	13.8	-14.0	16.2	-17.0	18.8	-20.0	21.6	-23.0	24.6	-26.0	27.7	-29.0	31.1	-33.2

~~Roof > 27 to 45 degrees~~	~~1~~	~~50~~	~~11.2~~	~~-11.0~~	~~12.2~~	~~-12.0~~	~~13.3~~	~~-13.0~~	~~15.6~~	~~-16.0~~	~~18.1~~	~~-18.0~~	~~20.8~~	~~-21.0~~	~~23.6~~	~~-24.0~~	~~26.7~~	~~-27.0~~	~~29.9~~	~~-30.8~~
	~~1~~	~~100~~	~~10.9~~	~~-10.0~~	~~11.9~~	~~-11.0~~	~~12.9~~	~~-12.0~~	~~15.1~~	~~-15.0~~	~~17.6~~	~~-17.0~~	~~20.2~~	~~-20.0~~	~~22.9~~	~~-22.0~~	~~25.9~~	~~-25.0~~	~~29.0~~	~~-29.0~~
	~~2~~	~~10~~	~~11.9~~	~~-15.0~~	~~13.1~~	~~-16.0~~	~~14.2~~	~~-18.0~~	~~16.7~~	~~-21.0~~	~~19.4~~	~~-24.0~~	~~22.2~~	~~-28.0~~	~~25.3~~	~~-32.0~~	~~28.5~~	~~-36.0~~	~~32.0~~	~~-40.9~~
	~~2~~	~~20~~	~~11.6~~	~~-14.0~~	~~12.7~~	~~-16.0~~	~~13.8~~	~~-17.0~~	~~16.2~~	~~-20.0~~	~~18.8~~	~~-23.0~~	~~21.6~~	~~-27.0~~	~~24.6~~	~~-30.0~~	~~27.7~~	~~-34.0~~	~~31.1~~	~~-39.1~~
	~~2~~	~~50~~	~~11.2~~	~~-13.0~~	~~12.2~~	~~-15.0~~	~~13.3~~	~~-16.0~~	~~15.6~~	~~-19.0~~	~~18.1~~	~~-22.0~~	~~20.8~~	~~-25.0~~	~~23.6~~	~~-29.0~~	~~26.7~~	~~-32.0~~	~~29.9~~	~~-36.8~~
	~~2~~	~~100~~	~~10.9~~	~~-13.0~~	~~11.9~~	~~-14.0~~	~~12.9~~	~~-15.0~~	~~15.1~~	~~-18.0~~	~~17.6~~	~~-21.0~~	~~20.2~~	~~-24.0~~	~~22.9~~	~~-27.0~~	~~25.9~~	~~-31.0~~	~~29.0~~	~~-35.0~~
	~~3~~	~~10~~	~~11.9~~	~~-15.0~~	~~13.1~~	~~-16.0~~	~~14.2~~	~~-18.0~~	~~16.7~~	~~-21.0~~	~~19.4~~	~~-24.0~~	~~22.2~~	~~-28.0~~	~~25.3~~	~~-32.0~~	~~28.5~~	~~-36.0~~	~~32.0~~	~~-40.9~~
	~~3~~	~~20~~	~~11.6~~	~~-14.0~~	~~12.7~~	~~-16.0~~	~~13.8~~	~~-17.0~~	~~16.2~~	~~-20.0~~	~~18.8~~	~~-23.0~~	~~21.6~~	~~-27.0~~	~~24.6~~	~~-30.0~~	~~27.7~~	~~-34.0~~	~~31.1~~	~~-39.1~~
	~~3~~	~~50~~	~~11.2~~	~~-13.0~~	~~12.2~~	~~-15.0~~	~~13.3~~	~~-16.0~~	~~15.6~~	~~-19.0~~	~~18.1~~	~~-22.0~~	~~20.8~~	~~-25.0~~	~~23.6~~	~~-29.0~~	~~26.7~~	~~-32.0~~	~~29.9~~	~~-36.8~~
	~~3~~	~~100~~	~~10.9~~	~~-13.0~~	~~11.9~~	~~-14.0~~	~~12.9~~	~~-15.0~~	~~15.1~~	~~-18.0~~	~~17.6~~	~~-21.0~~	~~20.2~~	~~-24.0~~	~~22.9~~	~~-27.0~~	~~25.9~~	~~-31.0~~	~~29.0~~	~~-35.0~~
~~Wall~~	~~4~~	~~10~~	~~13.1~~	~~-14.0~~	~~14.3~~	~~-15.0~~	~~15.5~~	~~-16.0~~	~~18.2~~	~~-19.0~~	~~21.2~~	~~-22.0~~	~~24.3~~	~~-26.0~~	~~27.7~~	~~-30.0~~	~~31.2~~	~~-33.0~~	~~35.0~~	~~-37.9~~
	~~4~~	~~20~~	~~12.5~~	~~-13.0~~	~~13.6~~	~~-14.0~~	~~14.8~~	~~-16.0~~	~~17.4~~	~~-19.0~~	~~20.2~~	~~-22.0~~	~~23.2~~	~~-25.0~~	~~26.4~~	~~-28.0~~	~~29.7~~	~~-32.0~~	~~33.4~~	~~-36.4~~
	~~4~~	~~50~~	~~11.7~~	~~-12.0~~	~~12.8~~	~~-14.0~~	~~13.9~~	~~-15.0~~	~~16.3~~	~~-17.0~~	~~19.0~~	~~-20.0~~	~~21.7~~	~~-23.0~~	~~24.7~~	~~-27.0~~	~~27.9~~	~~-30.0~~	~~31.3~~	~~-34.3~~
	~~4~~	~~100~~	~~11.1~~	~~-12.0~~	~~12.1~~	~~-13.0~~	~~13.2~~	~~-14.0~~	~~15.5~~	~~-17.0~~	~~18.0~~	~~-19.0~~	~~20.6~~	~~-22.0~~	~~23.5~~	~~-25.0~~	~~26.5~~	~~-29.0~~	~~29.8~~	~~32.7~~
	~~4~~	~~500~~	~~10.0~~	~~-10.0~~	~~10.6~~	~~-11.0~~	~~11.6~~	~~-12.0~~	~~13.6~~	~~-15.0~~	~~15.8~~	~~-17.0~~	~~18.1~~	~~-20.0~~	~~20.6~~	~~-22.0~~	~~23.2~~	~~-25.0~~	~~26.1~~	~~-29.0~~
	~~5~~	~~10~~	~~13.1~~	~~-17.0~~	~~14.3~~	~~-19.0~~	~~15.5~~	~~-20.0~~	~~18.2~~	~~-24.0~~	~~21.2~~	~~-28.0~~	~~24.3~~	~~-32.0~~	~~27.7~~	~~-37.0~~	~~31.2~~	~~-41.0~~	~~35.0~~	~~-46.8~~
	~~5~~	~~20~~	~~12.5~~	~~-16.0~~	~~13.6~~	~~-17.0~~	~~14.8~~	~~-19.0~~	~~17.4~~	~~-22.0~~	~~20.2~~	~~-26.0~~	~~23.2~~	~~-30.0~~	~~26.4~~	~~-34.0~~	~~29.7~~	~~-39.0~~	~~33.4~~	~~-43.7~~
	~~5~~	~~50~~	~~11.7~~	~~-14.0~~	~~12.8~~	~~-16.0~~	~~13.9~~	~~-17.0~~	~~16.3~~	~~-20.0~~	~~19.0~~	~~-23.0~~	~~21.7~~	~~-27.0~~	~~24.7~~	~~-31.0~~	~~27.9~~	~~-35.0~~	~~31.3~~	~~-39.5~~
	~~5~~	~~100~~	~~11.1~~	~~-13.0~~	~~12.1~~	~~-14.0~~	~~13.2~~	~~-16.0~~	~~15.5~~	~~-19.0~~	~~18.0~~	~~-22.0~~	~~20.6~~	~~-25.0~~	~~23.5~~	~~-28.0~~	~~26.5~~	~~-32.0~~	~~29.8~~	~~-36.4~~
	~~5~~	~~500~~	~~10.0~~	~~-10.0~~	~~10.6~~	~~-11.0~~	~~11.6~~	~~-12.0~~	~~13.6~~	~~-15.0~~	~~15.8~~	~~-17.0~~	~~18.1~~	~~-20.0~~	~~20.6~~	~~-22.0~~	~~23.2~~	~~-25.0~~	~~26.1~~	~~-29.0~~

For SI: 1 foot = 304.8 mm, 1 square foot = 0.0929 m^2, 1 mile per hour = 0.447 m/s, 1 pound per square foot = 0.0479 kPa.

a. The effective wind area shall be equal to the span length multiplied by an effective width. This width shall be permitted to be not less than one-third the span length. For cladding fasteners, the effective wind area shall not be greater than the area that is tributary to an individual fastener.

b. For effective areas between those given, the load shall be interpolated or the load associated with the lower effective area shall be used.

c. Table values shall be adjusted for height and exposure by multiplying by the adjustment coefficient in Table R301.2(3).

d. See Figure R301.2(7) for location of zones.

e. Plus and minus signs signify pressures acting toward and away from the building surfaces.
f. Positive and negative design wind pressures shall not be less than 10 psf.
g. Where the ratio of the building mean roof height to the building length or width is less than 0.8, uplift loads are allowed to be calculated in accordance with ASCE 7.

TABLE R301.2 (3)
HEIGHT AND EXPOSURE ADJUSTMENT COEFFICIENTS FOR TABLE R301.2(2)

MEAN ROOF HEIGHT	EXPOSURE		
	B	C	D
15	0.82~~1.00~~	1.21	1.47
20	0.89~~1.00~~	1.29	1.55
25	0.94~~1.00~~	1.35	1.61
30	1.00	1.40	1.66
35	1.05	1.45	1.70

40	1.09	1.49	1.74
45	1.12	1.53	1.78
50	1.16	1.56	1.81
55	1.19	1.59	1.84
60	1.22	1.62	1.87

Delete and substitute as follows:

FIGURE R301.2(4)A
A ULTIMATE DESIGN WIND SPEEDS

(Existing code figure not shown for clarity)

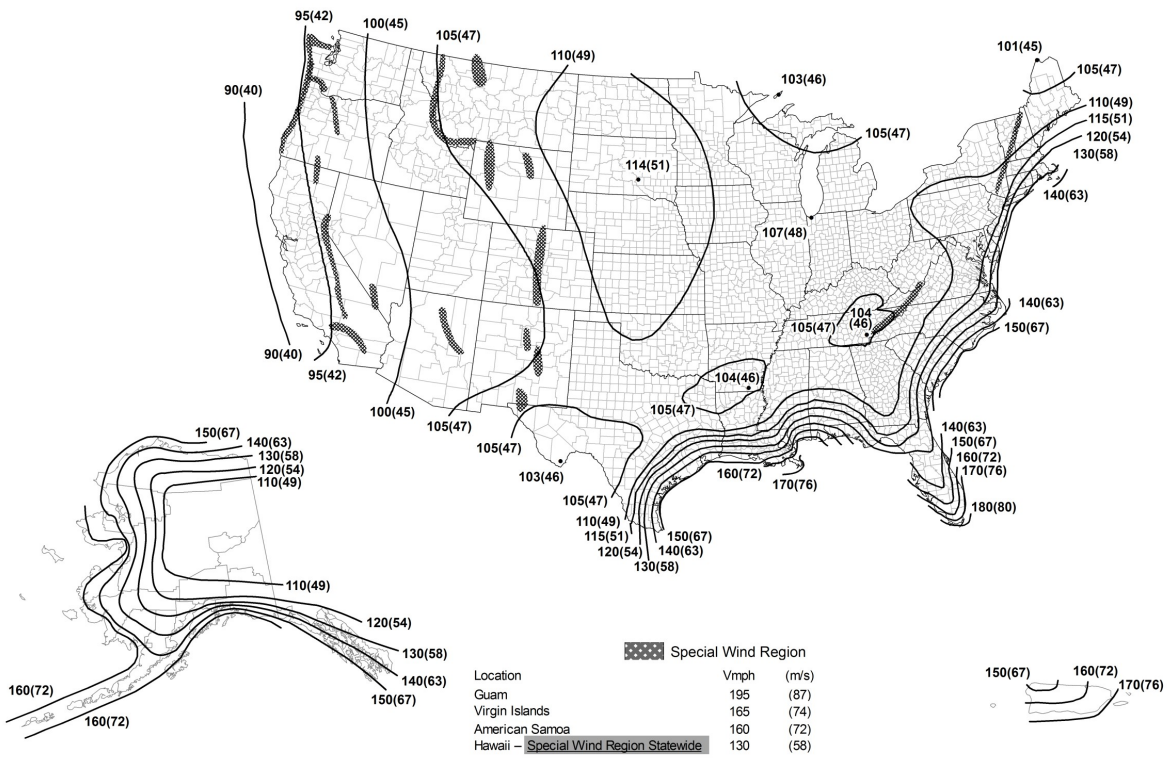

Notes:
1. Values are nominal design 3-second gust wind speeds in miles per hour (m/s) at 33 ft (10m) above ground for Exposure C category.
2. Linear interpolation is permitted between contours. Point values are provided to aid with interpolation.
3. Islands, coastal areas, and land boundaries outside the last contour shall use the last wind speed contour.
4. Mountainous terrain, gorges, ocean promontories, and special wind regions shall be examined for unusual wind conditions.
5. Wind speeds correspond to approximately a 7% probability of exceedance in 50 years (Annual Exceedance Probability = 0.00143, MRI = 700 Years).
6. Location-specific basic wind speeds shall be permitted to be determined using www.atcouncil.org/windspeed

Reason: This proposal coordinates the wind design criteria in the IRC with the soon to be published 2016 Edition of ASCE 7. As of the submission date of this code change proposal, the ASCE 7 Standards Committee has completed the committee balloting on the technical changes. The document designated ASCE 7 Minimum Design Loads and Associated Criteria for Buildings and Other Structures is expected to be completed, published, and available for purchase prior to the ICC Public Comment Hearing for Group B in October 2016. Any person interested in obtaining a public comment copy of ASCE 7-16 may do so by contacting James Neckel at ASCE (jneckel@asce.org).

There are two primary proposed changes to the IRC for coordination with the revised wind loading criteria in ASCE 7-16 - new basic wind speed map for Risk Category II buildings and revised roof component and cladding loads for buildings with mean roof heights less than or equal to 60 feet. In ASCE 7-16, wind speeds in non-hurricane prone areas of the contiguous United States have been revised using contours to better reflect regional variations in the extreme wind climate. Point values are provided to aid interpolation, in a style similar to that used in the ASCE 7 seismic hazard maps. Summaries of the data and methods used to estimate both the non-hurricane and hurricane wind speeds are provided in the commentary to Chapter 26 in ASCE 7-16. The wind speeds in the hurricane-prone region have not changed from ASCE 7-10. Revised Figure R301.2(4)A reflects the wind speed map in ASCE 7-16 for Risk Category II buildings.

The simplified component and cladding loads in Table R301.2(2) are proposed to be revised for correlation with the new roof component and cladding loads for buildings with mean roof heights less than or equal to 60 feet. The roof zones and pressure coefficients in Figure 30.4-2 (Figures 30.4-2A through 30.4-2I) have been revised based on an analysis of an extensive wind tunnel database. All source data used in the study are publicly accessible through the National Institute of Standards and Technology's website. Compared to previous versions of ASCE 7, the pressure coefficients have been increased, and are now more consistent with coefficients for buildings higher than 60 ft. Roof zone sizes are also modified from those of earlier versions in order to minimize the increase of pressure coefficients in zones 1 and 2. The data indicate that for these low-rise buildings, the size of the roof zones depend primarily on the building height, h. The GCp values given in

Figures 30.4-2A through 30.4-2I are associated with wind tunnel tests performed in both Exposures B and C. For Figure 30.4-2A, the coefficients apply equally to Exposure B and C, based on wind tunnel data that show insignificant differences in (GCp) for Exposures B and C. Consequently, the truncation for Kz in Table 30.3-1 of ASCE 7-10 is not required for buildings below 30 ft, and the lower Kz values may be used as shown revised in Figure R301.2(3) of the IRC.

Cost Impact: Will increase the cost of construction

Component and cladding loads for roofs on buildings with mean roof heights less than or equal to 60 feet are higher for some roof slopes and zones than similar roof slopes and zones in Table R301.2(2) in the 2015 IRC. Construction costs will increase for roofing products and decking for some areas of the country.

As of the submission date of this code change proposal, the ASCE 7 Standards Committee has completed the committee balloting on the technical changes. The document designated ASCE 7 Minimum Design Loads and Associated Criteria for Buildings and Other Structures is expected to be completed, published, and available for purchase prior to the ICC Public Comment Hearing for Group B in October 2016. Any person interested in obtaining a public comment copy of ASCE 7-16 may do so by contacting James Neckel at ASCE (jneckel@asce.org).

RB20-16 : R301.2-STAFFORD12555

Public Hearing Results

Committee Action: **Disapproved**

Committee Reason: There are too many problems with this proposal. It limits choices of roof covering, the standard development is not complete yet and we need to wait for that to happen, and it appears to be a major cost increase.

Assembly Motion: **As Submitted**

Online Vote Results: **Failed**

Support: 28.23% (70) Oppose: 71.77% (178)

Assembly Action: **None**

Individual Consideration Agenda

Proponent : Scott Campbell, representing Portland Cement Association (scampbell@cement.org) requests Approve as Submitted.

Commenter's Reason: The proposed change is meant to bring the IRC in line with ASCE 7-16 regarding wind load on low rise structures. The opponents of the proposal are concerned that the revised wind roof load values for low rise structures are unfavorable for their industry. However, the revised values are based on the latest research independent, i.e. not industry funded, organizations and reflect the current state of knowledge among wind load professionals. The committee reasoning for disapproving the proposal include the standard not being complete, which is incorrect since the sections dealing with the proposed change have been balloted and are final. Another reason given for disapproval is that the choice of roof materials is limited by the proposal. This is only true if the roof materials are not capable of withstanding the design roof wind loads, in which case they should be restricted. The original proposal should be approved as submitted to ensure that the IRC reflects the properly technically vetted wind load criteria developed in the ANSI accredited ASCE standards development process.

Public Comment 2:

Proponent : T. Eric Stafford, PE, representing Institute for Business and Home Safety; Jennifer Goupil, representing American Society of Civil Engineers (jgoupil@asce.org); Don Scott, Representing NCSEA Wind Engineering Committee, representing National Council of Structural Engineers Associations (dscott@pcs-structural.com) requests Approve as Modified by this Public Comment.

Further Modify as Follows:

2015 International Residential Code

TABLE R301.2 (2)

COMPONENT AND CLADDING LOADS FOR A BUILDING WITH A MEAN ROOF HEIGHT OF 30 FEET LOCATED IN EXPOSURE B (ASD) (psf)[a, b, c, d, e, f]

	Zone	Effective Wind Areas (feet^2)	Ultimate Design Wind Speed, V_{ult}																									
			90		95		100		105		110		115		120		130		140		150		160		170		180	
			Pos	Neg	Pos	Neg	Pos	Neg	Pos	Neg	Pos	Neg	Pos	Neg	Pos	Neg	Pos	Neg	Pos	Neg	Pos	Neg	Pos	Neg	Pos	Neg	Pos	Neg
Flat and Gable Roof 0 to 7 degrees	1	10	~~3.6~~	~~-13.9~~	~~4.0~~	~~-15.5~~	~~4.4~~	~~-17.2~~	~~4.8~~	~~-19.0~~	~~5.3~~	~~-20.8~~	~~5.8~~	~~-22.7~~	~~6.3~~	~~-24.8~~	~~7.4~~	~~-29.1~~	~~8.6~~	~~-33.7~~	~~9.9~~	~~-38.7~~	~~11.2~~	~~-44.0~~	~~12.7~~	~~-49.7~~	~~14.2~~	~~-55.7~~
	1	20	~~3.3~~	~~-12.4~~	~~3.7~~	~~-13.8~~	~~4.1~~	~~-15.3~~	~~4.5~~	~~-16.8~~	~~5.0~~	~~-18.5~~	~~5.4~~	~~-20.2~~	~~5.9~~	~~-22.0~~	~~7.0~~	~~-25.8~~	~~8.1~~	~~-29.9~~	~~9.3~~	~~-34.4~~	~~10.5~~	~~-39.1~~	~~11.9~~	~~-44.1~~	~~13.3~~	~~-49.5~~
	1	50	~~3.0~~	~~-10.3~~	~~3.4~~	~~-11.5~~	~~3.8~~	~~-12.7~~	~~4.1~~	~~-14.0~~	~~4.5~~	~~-15.4~~	~~5.0~~	~~-16.8~~	~~5.4~~	~~-18.3~~	~~6.3~~	~~-21.5~~	~~7.4~~	~~-24.9~~	~~8.4~~	~~-28.6~~	~~9.6~~	~~-32.5~~	~~10.8~~	~~-36.7~~	~~12.2~~	~~-41.2~~
	1	100	~~2.8~~	~~-8.7~~	~~3.1~~	~~-9.7~~	~~3.5~~	~~-10.8~~	~~3.8~~	~~-11.9~~	~~4.2~~	~~-13.1~~	~~4.6~~	~~-14.3~~	~~5.0~~	~~-15.5~~	~~5.9~~	~~-18.2~~	~~6.8~~	~~-21.2~~	~~7.8~~	~~-24.3~~	~~8.9~~	~~-27.6~~	~~10.0~~	~~-31.2~~	~~11.3~~	~~-35.0~~
	2	10	~~3.6~~	~~-18.4~~	~~4.0~~	~~-20.5~~	~~4.4~~	~~-22.7~~	~~4.8~~	~~-25.0~~	~~5.3~~	~~-27.4~~	~~5.8~~	~~-30.0~~	~~6.3~~	~~-32.7~~	~~7.4~~	~~-38.3~~	~~8.6~~	~~-44.5~~	~~9.9~~	~~-51.0~~	~~11.2~~	~~-58.1~~	~~12.7~~	~~-65.6~~	~~14.2~~	~~-73.5~~

	2	20	~~3.3~~	~~-16.4~~	~~3.7~~	~~-18.2~~	~~4.1~~	~~-20.2~~	~~4.5~~	~~-22.3~~	~~5.0~~	~~-24.5~~	~~5.4~~	~~-26.7~~	~~5.9~~	~~-29.1~~	~~7.0~~	~~-34.2~~	~~8.1~~	~~-39.6~~	~~9.3~~	~~-45.5~~	~~10.5~~	~~-51.8~~	~~11.9~~	~~-58.4~~	~~13.3~~	~~-65.5~~
	2	50	~~3.0~~	~~-13.7~~	~~3.4~~	~~-15.3~~	~~3.8~~	~~-16.9~~	~~4.1~~	~~-18.7~~	~~4.5~~	~~-20.5~~	~~5.0~~	~~-22.4~~	~~5.4~~	~~-24.4~~	~~6.3~~	~~-28.6~~	~~7.4~~	~~-33.2~~	~~8.4~~	~~-38.1~~	~~9.6~~	~~-43.3~~	~~10.8~~	~~-48.9~~	~~12.2~~	~~-54.8~~
	2	100	~~2.8~~	~~-11.7~~	~~3.1~~	~~-13.0~~	~~3.5~~	~~-14.5~~	~~3.8~~	~~-15.9~~	~~4.2~~	~~-17.5~~	~~4.6~~	~~-19.1~~	~~5.0~~	~~-20.8~~	~~5.9~~	~~-24.4~~	~~6.8~~	~~-28.3~~	~~7.8~~	~~-32.5~~	~~8.9~~	~~-37.0~~	~~10.0~~	~~-41.8~~	~~11.3~~	~~-46.8~~
	3	10	~~3.6~~	~~-25.0~~	~~4.0~~	~~-27.9~~	~~4.4~~	~~-30.9~~	~~4.8~~	~~-34.1~~	~~5.3~~	~~-37.4~~	~~5.8~~	~~-40.9~~	~~6.3~~	~~-44.5~~	~~7.4~~	~~-52.2~~	~~8.6~~	~~-60.6~~	~~9.9~~	~~-69.6~~	~~11.2~~	~~-79.1~~	~~12.7~~	~~-89.4~~	~~14.2~~	~~-100.2~~
	3	20	~~3.3~~	~~-21.0~~	~~3.7~~	~~-23.4~~	~~4.1~~	~~-26.0~~	~~4.5~~	~~-28.6~~	~~5.0~~	~~-31.4~~	~~5.4~~	~~-34.4~~	~~5.9~~	~~-37.4~~	~~7.0~~	~~-43.9~~	~~8.1~~	~~-50.9~~	~~9.3~~	~~-58.4~~	~~10.5~~	~~-66.5~~	~~11.9~~	~~-75.1~~	~~13.3~~	~~-84.2~~
	3	50	~~3.0~~	~~-15.7~~	~~3.4~~	~~-17.5~~	~~3.8~~	~~-19.4~~	~~4.1~~	~~-21.4~~	~~4.5~~	~~-23.5~~	~~5.0~~	~~-25.6~~	~~5.4~~	~~-27.9~~	~~6.3~~	~~-32.8~~	~~7.4~~	~~-38.0~~	~~8.4~~	~~-43.6~~	~~9.6~~	~~-49.6~~	~~10.8~~	~~-56.0~~	~~12.2~~	~~-62.8~~
	3	100	~~2.8~~	~~-11.7~~	~~3.1~~	~~-13.0~~	~~3.5~~	~~-14.5~~	~~3.8~~	~~-15.9~~	~~4.2~~	~~-17.5~~	~~4.6~~	~~-19.1~~	~~5.0~~	~~-20.8~~	~~5.9~~	~~-24.4~~	~~6.8~~	~~-28.3~~	~~7.8~~	~~-32.5~~	~~8.9~~	~~-37.0~~	~~10.0~~	~~-41.8~~	~~11.3~~	~~-46.8~~
Gable Roof > 7 to 20 degrees	1, 2e	10	~~6.5~~	~~-16.2~~	~~7.3~~	~~-18.0~~	~~8.0~~	~~-19.9~~	~~8.9~~	~~-22.0~~	~~9.7~~	~~-24.1~~	~~10.6~~	~~-26.4~~	~~11.6~~	~~-28.7~~	~~13.6~~	~~-33.7~~	~~15.8~~	~~-39.1~~	~~18.1~~	~~-44.9~~	~~20.6~~	~~-51.0~~	~~23.3~~	~~-57.6~~	~~26.1~~	~~-64.6~~
	1, 2e	20	~~5.6~~	~~-16.2~~	~~6.3~~	~~-18.0~~	~~7.0~~	~~-19.9~~	~~7.7~~	~~-22.0~~	~~8.4~~	~~-24.1~~	~~9.2~~	~~-26.4~~	~~10.0~~	~~-28.7~~	~~11.7~~	~~-33.7~~	~~13.6~~	~~-39.1~~	~~15.6~~	~~-44.9~~	~~17.8~~	~~-51.0~~	~~20.1~~	~~-57.6~~	~~22.5~~	~~-64.6~~
	1, 2e	50	~~4.4~~	~~-9.9~~	~~5.0~~	~~-11.0~~	~~5.5~~	~~-12.2~~	~~6.1~~	~~-13.4~~	~~6.6~~	~~-14.7~~	~~7.3~~	~~-16.1~~	~~7.9~~	~~-17.5~~	~~9.3~~	~~-20.6~~	~~10.8~~	~~-23.8~~	~~12.3~~	~~-27.4~~	~~14.0~~	~~-31.1~~	~~15.9~~	~~-35.2~~	~~17.8~~	~~-39.4~~
	1, 2e	100	~~3.6~~	~~-5.0~~	~~4.0~~	~~-5.6~~	~~4.4~~	~~-6.2~~	~~4.8~~	~~-6.9~~	~~5.3~~	~~-7.5~~	~~5.8~~	~~-8.2~~	~~6.3~~	~~-9.0~~	~~7.4~~	~~-10.5~~	~~8.6~~	~~-12.2~~	~~9.9~~	~~-14.0~~	~~11.2~~	~~-15.9~~	~~12.7~~	~~-18.0~~	~~14.2~~	~~-20.2~~
	2n, 2r, 3e	10	~~6.5~~	~~-23.6~~	~~7.3~~	~~-26.3~~	~~8.0~~	~~-29.1~~	~~8.9~~	~~-32.1~~	~~9.7~~	~~-35.2~~	~~10.6~~	~~-38.5~~	~~11.6~~	~~41.9 -~~	~~13.6~~	~~-49.2~~	~~15.8~~	~~-57.0~~	~~18.1~~	~~-65.4~~	~~20.6~~	~~-74.5~~	~~23.3~~	~~-84.1~~	~~26.1~~	~~-94.2~~
	2n, 2r, 3e	20	~~5.6~~	~~-20.3~~	~~6.3~~	~~-22.7~~	~~7.0~~	~~-25.1~~	~~7.7~~	~~-27.7~~	~~8.4~~	~~-30.4~~	~~9.2~~	~~-33.2~~	~~10.0~~	~~-36.2~~	~~11.7~~	~~-42.4~~	~~13.6~~	~~-49.2~~	~~15.6~~	~~-56.5~~	~~17.8~~	~~-64.3~~	~~20.1~~	~~-72.6~~	~~22.5~~	~~-81.4~~
	2n, 2r, 3e	50	~~4.4~~	~~-16.0~~	~~5.0~~	~~-17.9~~	~~5.5~~	~~-19.8~~	~~6.1~~	~~-21.8~~	~~6.6~~	~~-24.0~~	~~7.3~~	~~-26.2~~	~~7.9~~	~~-28.5~~	~~9.3~~	~~-33.5~~	~~10.8~~	~~-38.8~~	~~12.3~~	~~-44.6~~	~~14.0~~	~~-50.7~~	~~15.9~~	~~-57.2~~	~~17.8~~	~~-64.2~~
	2n, 2r, 3e	100	~~3.6~~	~~-12.8~~	~~4.0~~	~~-14.3~~	~~4.4~~	~~-15.8~~	~~4.8~~	~~-17.4~~	~~5.3~~	~~-19.1~~	~~5.8~~	~~-20.9~~	~~6.3~~	~~-22.8~~	~~7.4~~	~~-26.7~~	~~8.6~~	~~-31.0~~	~~9.9~~	~~-35.6~~	~~11.2~~	~~-40.5~~	~~12.7~~	~~-45.7~~	~~14.2~~	~~-51.3~~
	3r	10	~~6.5~~	~~-28.0~~	~~7.3~~	~~-31.2~~	~~8.0~~	~~-34.6~~	~~8.9~~	~~-38.1~~	~~9.7~~	~~-41.8~~	~~10.6~~	~~-45.7~~	~~11.6~~	~~-49.8~~	~~13.6~~	~~-58.4~~	~~15.8~~	~~-67.8~~	~~18.1~~	~~-77.8~~	~~20.6~~	~~-88.5~~	~~23.3~~	~~-99.9~~	~~26.1~~	~~-112.0~~
	3r	20	~~5.6~~	~~-24.0~~	~~6.3~~	~~-26.7~~	~~7.0~~	~~-29.6~~	~~7.7~~	~~-32.7~~	~~8.4~~	~~-35.9~~	~~9.2~~	~~-39.2~~	~~10.0~~	~~-42.7~~	~~11.7~~	~~-50.1~~	~~13.6~~	~~-58.1~~	~~15.6~~	~~-66.7~~	~~17.8~~	~~-75.9~~	~~20.1~~	~~-85.6~~	~~22.5~~	~~-96.0~~
	3r	50	~~4.4~~	~~-18.7~~	~~5.0~~	~~-20.8~~	~~5.5~~	~~-23.1~~	~~6.1~~	~~-25.4~~	~~6.6~~	~~-27.9~~	~~7.3~~	~~30.5 -~~	~~7.9~~	~~-33.2~~	~~9.3~~	~~-39.0~~	~~10.8~~	~~-45.2~~	~~12.3~~	~~-51.9~~	~~14.0~~	~~-59.0~~	~~15.9~~	~~-66.6~~	~~17.8~~	~~-74.7~~
	3r	100	~~3.6~~	~~-14.7~~	~~4.0~~	~~-16.3~~	~~4.4~~	~~-18.1~~	~~4.8~~	~~-20.0~~	~~5.3~~	~~-21.9~~	~~5.8~~	~~-24.00~~	~~6.3~~	~~-26.1~~	~~7.4~~	~~-30.6~~	~~8.6~~	~~-35.5~~	~~9.9~~	~~-40.8~~	~~11.2~~	~~-46.4~~	~~12.7~~	~~-52.3~~	~~14.2~~	~~-58.7~~
Gable Roof > 20 to 27 degrees	1, 2e	10	6.5	-12.4	7.3	-13.9	8.0	-15.4	8.9	-16.9	9.7	-18.6	10.6	-20.3	11.6	-22.1	13.6	-26.0	15.8	-30.1	18.1	-34.6	20.6	-39.3	23.3	-44.4	26.1	-49.9
	1, 2e	20	5.6	-12.4	6.3	-13.9	7.0	-15.4	7.7	-16.9	8.4	-18.6	9.2	-20.3	10.0	-22.1	11.7	-26.0	13.6	-30.1	15.6	-34.6	17.8	-39.3	20.1	-44.4	22.5	-49.8
	1, 2e	50	4.4	-10.6	5.0	-11.8	5.5	-13.1	6.1	-14.4	6.6	-15.8	7.3	-17.3	7.9	-18.8	9.3	-22.1	10.8	-25.6	12.3	-29.4	14.0	-33.5	15.9	-37.8	17.8	-42.4

	1, 2e	100	3.6	-9.1	4.0	-10.2	4.4	-11.3	4.8	-12.4	5.3	-13.6	5.8	-14.9	6.3	-16.2	7.4	-19,0	8.6	-22.1	9.9	-25.3	11.2	-28.8	12.7	-32.5	14.2	-36.5
	2n, 2r, 3e	10	6.5	-19.9	7.3	-22.1	8.0	-24.5	8.9	-27.0	9.7	-29.7	10.6	-32.4	11.6	-35.3	13.6	-41.4	15.8	-48.0	18.1	-55.2	20.6	-62.8	23.3	-70.8	26.1	-79.4
	2n, 2r, 3e	20	5.6	-17.4	6.3	-19.4	7.0	-21.5	7.7	-23.7	8.4	-26.0	9.2	-28.4	10.0	-31.0	11.7	-36.3	13.6	-42.1	15.6	-48.4	17.8	-55.0	20.1	-62.1	22.5	-69.6
	2n, 2r, 3e	50	4.4	-14.2	5.0	-15.8	5.5	-17.5	6.1	-19.3	6.6	-21.1	7.3	-23.1	7.9	-25.2	9.3	-29.5	10.8	-34.2	12.3	-39.3	14.0	-44.7	15.9	-50.5	17.8	-56.6
	2n, 2r, 3e	100	3.6	-11.7	4.0	-13.0	4.4	-14.5	4.8	-15.9	5.3	-17.5	5.8	-19.1	6.3	-20.8	7.4	-24.4	8.6	-28.3	9.9	-32.5	11.2	-37.0	12.7	-41.8	14.2	-46.8
	3r	10	6.5	-23.6	7.3	-26.3	8.0	-29.1	8.9	-32.1	9.7	-35.2	10.6	-38.5	11.6	-41.9	13.6	-49.2	15.8	-57.0	18.1	-65.4	20.6	-74.5	23.3	-84.1	26.1	-94.2
	3r	20	5.6	-19.9	6.3	-22.1	7.0	-24.5	7.7	-27.0	8.4	-29.7	9.2	-32.4	10.0	-35.3	11.7	-41.4	13.6	-48.0	15.6	-55.2	17.8	-62.8	20.1	-70.8	22.5	-79.4
	3r	50	4.4	-14.7	5.0	-16.3	5.5	-18.1	6.1	-20.0	6.6	-21.9	7.3	-24.0	7.9	-26.1	9.3	-30.6	10.8	-35.5	12.3	-40.8	14.0	-46.4	15.9	-52.3	17.8	-58.7
	3r	100	3.6	-14.7	4.0	-16.3	4.4	-18.1	4.8	-20.0	5.3	-21.9	5.8	-24.0	6.3	-26.1	7.4	-30.6	8.6	-35.5	9.9	-40.8	11.2	-46.4	12.7	-52.3	14.2	-58.7
Gable Roof > 27 to 45 degrees	1, 2e, 2r	10	8.0	-14.7	8.9	-16.3	9.9	-18.1	10.9	-20.0	12.0	-21.9	13.1	-24.0	14.2	-26.1	16.7	-30.6	19.4	-35.5	22.2	-40.8	25.3	-46.4	28.5	-52.3	32.0	-58.7
	1, 2e, 2r	20	7.1	-12.4	7.9	-13.9	8.8	-15.4	9.7	-16.9	10.6	-18.6	11.6	-20.3	12.6	-22.1	14.8	-26.0	17.2	-30.1	19.8	-34.6	22.5	-39.3	25.4	-44.4	28.5	-49.8
	1, 2e, 2r	50	5.9	-9.5	6.6	-10.6	7.3	-11.7	8.1	-12.9	8.9	-14.2	9.7	-15.5	10.5	-16.9	12.4	-19.8	14.3	-22.9	16.5	-26.3	18.7	-30.0	21.1	-33.8	23.7	-37.9
	1, 2e, 2r	100	5.0	-7.3	5.6	-8.1	6.2	-9.0	6.9	-9.9	7.5	-10.8	8.2	-11.9	9.0	-12.9	10.5	-15.1	12.2	-17.6	14.0	-20.2	15.9	-22.9	18.0	-25.9	20.2	-29.0
	2n, 3r	10	8.0	-16.2	8.9	-18.0	9.9	-19.9	10.9	-22.0	12.0	-24.1	13.1	-26.4	14.2	-28.7	16.7	-33.7	19.4	-39.1	22.2	-44.9	25.3	-51.0	28.5	-57.6	32.0	-64.6
	2n, 3r	20	7.1	-14.4	7.9	-16.1	8.8	-17.8	9.7	-19.7	10.6	-21.6	11.6	-23.6	12.6	-25.7	14.8	-30.1	17.2	-34.9	19.8	-40.1	22.5	-45.6	25.4	-51.5	28.5	-57.8
	2n, 3r	50	5.9	-12.2	6.6	-13.5	7.3	-15.0	8.1	-16.5	8.9	-18.2	9.7	-19.9	10.5	-21.6	12.4	-25.4	14.3	-29.4	16.5	-33.8	18.7	-38.4	21.1	-43.4	23.7	-48.6
	2n, 3r	100	5.0	-10.4	5.6	-11.6	6.2	-12.9	6.9	-14.2	7.5	-15.6	8.2	-17.1	9.0	-18.6	10.5	-21.8	12.2	-25.3	14.0	-29.0	15.9	-33.0	18.0	-37.3	20.2	-41.8
	3e	10	8.0	-19.9	8.9	-22.1	9.9	-24.5	10.9	-27.0	12.0	-29.7	13.1	-32.4	14.2	-35.3	16.7	-41.4	19.4	-48.0	22.2	-55.2	25.3	-62.8	28.8	-70.8	32.0	-79.4
	3e	20	7.1	-17.6	7.9	-19.6	8.8	-21.8	9.7	-24.0	10.6	-26.3	11.6	-28.8	12.6	-31.3	14.8	-36.8	17.2	-42.7	19.8	-49.0	22.5	-55.7	25.4	-62.9	28.5	-70.5
	3e	50	5.9	-14.7	6.6	-16.3	7.3	-18.1	8.1	-20.0	8.9	-21.9	9.7	-24.0	10.5	-26.1	12.4	-30.6	14.3	-35.5	16.6	-40.8	18.7	-46.4	21.1	-52.3	23.7	-58.7
	3e	100	5.0	-12.4	5.6	-13.9	6.2	-15.4	6.9	-16.9	7.5	-18.6	8.2	-20.3	9.0	-22.1	10.5	-26.0	12.2	-30.1	14.0	-34.6	15.9	-39.3	18.0	-44.4	20.2	-49.8
Hipped Roof > 7 to 20 degrees[g]	1	10	6.5	-14.7	7.3	-16.3	8.0	-18.1	8.9	-20.0	9.7	-21.9	10.6	-24.0	11.6	-26.1	13.6	-30.6	15.8	-35.5	18.1	-40.8	20.6	-46.4	23.3	-52.3	26.1	-58.7

	1	20	5.6	-14.7	6.3	-16.3	7.0	-18.1	7.7	-20.0	8.4	-21.9	9.2	-24.0	10.0	-26.1	11.7	-30.6	13.6	-35.5	15.6	-40.8	17.8	-46.4	20.1	-52.3	22.5	-58.7
	1	50	4.4	-11.3	5.0	-12.6	5.5	-14.0	6.1	-15.4	6.6	-16.9	7.3	-18.5	7.9	-20.2	9.3	-23.7	10.8	-27.4	12.3	-31.5	14.0	-35.8	15.9	-40.4	17.8	-45.3
	1	100	3.6	-8.7	4.0	-9.7	4.4	-10.8	4.8	-11.9	5.3	-13.1	5.8	-14.3	6.3	-15.5	7.4	-18.2	8.6	-21.2	9.9	-24.3	11.2	-27.6	12.7	-31.2	14.2	-35.0
	2r	10	6.5	-19.1	7.3	-21.3	8.0	-23.6	8.9	-26.0	9.7	-28.6	10.6	-31.2	11.6	-34.0	13.6	-39.9	15.8	-46.3	18.1	-53.1	20.6	-60.4	23.3	-68.2	26.1	-76.5
	2r	20	5.6	-17.2	6.3	-19.2	7.0	-21.3	7.7	-23.4	8.4	-25.7	9.2	-28.1	10.0	-30.6	11.7	-35.9	13.6	-41.7	15.6	-47.9	17.8	-54.4	20.1	-61.5	22.5	-68.9
	2r	50	4.4	-14.7	5.0	-16.4	5.5	-18.2	6.1	20.0-	6.6	-22.0	7.3	-24.0	7.9	-26.1	9.3	-30.7	10.8	-35.6	12.3	-40.9	14.0	-46.5	15.9	-52.5	17.8	-58.8
	2r	100	3.6	-12.8	4.0	-14.3	4.4	-15.8	4.8	-17.4	5.3	-19.1	5.8	-20.9	6.3	-22.8	7.4	-26.7	8.6	-31.0	9.9	-35.6	11.2	-40.5	12.7	-45.7	14.2	-51.3
	2e, 3	10	6.5	-20.6	7.3	-22.9	8.0	-25.4	8.9	-28.0	9.7	-30.8	10.6	-33.6	11.6	-36.6	13.6	-43.0	15.8	-49.8	18.1	-57.2	20.6	-65.1	23.3	-73.5	26.1	-82.4
	2e, 3	20	5.6	-18.5	6.3	-20.6	7.0	-22.9	7.7	-25.2	8.4	-27.7	9.2	-30.3	10.0	-32.9	11.7	-38.7	13.6	-44.8	15.6	-51.5	17.8	-58.6	20.1	-66.1	22.5	-74.1
	2e, 3	50	4.4	-15.8	5.0	-17.6	5.5	-19.5	6.1	-21.5	6.6	-23.6	7.3	-25.8	7.9	-28.0	9.3	-32.9	10.8	-38.2	12.3	-43.8	14.0	-49.9	15.9	-56.3	17.8	-63.1
	2e, 3	100	3.6	-13.7	4.0	-15.3	4.0	-16.9	4.8	-18.7	5.3	-20.5	5.8	-22.4	6.3	-24.4	7.4	-28.6	8.6	-33.2	9.9	-38.1	11.2	-43.3	12.7	-48.9	14.2	-54.8
Hipped Roof > 20 to 27 degrees	1	10	6.5	-11.7	7.3	-13.0	8.0	-14.5	8.9	-15.9	9.7	-17.5	10.6	-19.1	11.6	-20.8	13.6	-24.4	15.8	-28.3	18.1	-32.5	20.6	-37.0	23.3	-41.8	26.1	-46.8
	1	20	5.6	-10.4	6.3	-11.6	7.0	-12.8	7.7	-14.1	8.4	-15.5	9.2	-16.9	10.0	-18.4	11.7	-21.6	13.6	-25.1	15.6	-28.8	17.8	-32.8	20.1	-37.0	22.5	-41.5
	1	50	4.4	-8.6	5.0	-9.6	5.5	-10.6	6.1	-11.7	6.6	-12.8	7.3	-14.0	7.9	-15.3	9.3	-17.9	10.8	-20.8	12.3	-23.9	14.0	-27.2	15.9	-30.7	17.8	-34.4
	1	100	3.6	-7.3	4.0	-8.1	4.4	-9.0	4.8	-9.9	5.3	-10.8	5.8	-11.9	6.3	-12.9	7.4	-15.1	8.6	-17.6	9.9	-20.2	11.2	-22.9	12.7	-25.9	14.2	-29.0
	2e, 2r, 3	10	6.5	-16.2	7.3	-18.0	8.0	-19.9	8.9	-22.0	9.7	-24.1	10.6	-26.4	11.6	-28.7	13.6	-33.7	15.8	-39.1	18.1	-44.9	20.6	-51.0	23.3	-57.6	26.1	-64.6
	2e, 2r, 3	20	5.6	-14.4	6.3	-16.1	7.0	-17.8	7.7	-19.7	8.4	-21.6	9.2	-23.6	10.0	-25.7	11.7	-30.1	13.6	-34.9	15.6	-40.1	17.8	-45.6	20.1	-51.5	22.5	-57.8
	2e, 2r, 3	50	4.4	-12.2	5.0	-13.5	5.5	-15.0	6.1	-16.5	6.6	-18.2	7.3	-19.9	7.9	-21.6	9.3	-25.4	10.8	-29.4	12.3	-33.8	14.0	-38.4	15.9	-43.4	17.8	-48.6
	2e, 2r, 3	100	3.6	-10.4	4.0	-11.6	4.4	-12.9	4.8	-14.2	5.3	-15.6	5.8	-17.1	6.3	-18.6	7.4	-21.8	8.6	-25.3	9.9	-29.0	11.2	-33.0	12.7	-37.3	14.2	-41.8
Hipped Roof > 27 to 45 degrees	1	10	6.2	-12.4	6.9	-13.9	7.7	-15.4	8.5	-16.9	9.3	-18.6	10.2	-20.3	11.1	-22.1	13.0	-26.0	15.1	-30.1	17.3	-34.6	19.7	-39.3	22.2	-44.4	24.9	-49.8
	1	20	5.4	-11.0	6.0	-12.3	6.7	-13.6	7.4	-15.0	8.1	-16.5	8.9	-18.0	9.6	-19.6	11.3	-23.0	13.1	-26.7	15.1	-30.7	17.1	-34.9	19.4	-39.4	21.7	-44.2
	1	50	4.4	-9.2	4.9	-10.2	5.4	-11.3	5.9	-12.5	6.5	-13.7	7.1	-15.0	7.7	-16.3	9.1	-19.2	10.5	-22.2	12.1	-25.5	13.8	-29.0	15.5	-32.8	17.4	-36.7

	1	100	3.6	-7.8	4.0	-8.7	4.4	-9.6	4.8	-10.6	5.3	-11.6	5.8	-12.7	6.3	-13.8	7.4	-16.2	8.6	-18.8	9.9	-21.6	11.2	-24.6	12.7	-27.8	14.2	-31.1
	2e	10	6.2	-14.8	6.9	-16.5	7.7	-18.3	8.5	-20.2	9.3	-22.1	10.2	-24.2	11.1	-26.3	13.0	-30.9	15.1	-35.9	17.3	-41.2	19.7	-46.8	22.2	-52.9	24.9	-59.3
	2e	20	5.4	-11.7	6.0	-13.0	6.7	-14.5	7.4	-15.9	8.1	-17.5	8.9	-19.1	9.6	-20.8	11.3	-24.4	13.1	-28.3	15.1	-32.5	17.1	-37.0	19.4	-41.8	21.7	-46.8
	2e	50	4.4	-7.3	4.9	-8.1	5.4	-9.0	5.9	-9.9	6.5	-10.8	7.1	-11.9	7.7	-12.9	9.1	-15.1	10.5	-17.6	12.1	-20.2	13.8	-22.9	15.5	-25.9	17.4	-29.0
	2e	100	3.6	-7.3	4.0	-8.1	4.4	-9.0	4.8	-9.9	5.3	-10.8	5.8	-11.9	6.3	-12.9	7.4	-15.1	8.6	-17.6	9.9	-20.2	11.2	-22.9	12.7	-25.9	14.2	-29.0
	2r	10	6.2	-18.7	6.9	-20.9	7.7	-23.1	8.5	-25.5	9.3	-28.0	10.2	-30.6	11.1	-33.3	13.0	-39.1	15.1	-45.4	17.3	-52.1	19.7	-59.2	22.2	-66.9	24.9	-75.0
	2r	20	5.4	-15.7	6.0	-17.5	6.7	-19.4	7.4	-21.4	8.1	-23.5	8.9	-25.7	9.6	-28.0	11.3	-32.8	13.1	-38.1	15.1	-43.7	17.1	-49.8	19.4	-56.2	21.7	-63.0
	2r	50	4.4	-11.7	4.9	-13.1	5.4	-14.5	5.9	-16.0	6.5	-17.5	7.1	-19.2	7.7	-20.9	9.1	-24.5	10.5	-28.4	12.1	-32.6	13.8	-37.1	15.5	-41.9	17.4	-47.0
	2r	100	3.6	-8.7	4.0	-9.7	4.4	-10.8	4.8	-11.9	5.3	-13.1	5.8	-14.3	6.3	-15.5	7.4	-18.2	8.6	-21.2	9.9	-24.3	11.2	-27.6	12.7	31.2 -	14.2	-35.0
	3	10	6.2	-20.0	6.9	-22.3	7.7	-24.7	8.5	-27.2	9.3	-29.9	10.2	-32.7	11.1	-35.6	13.0	-41.7	15.1	-48.4	17.3	-55.6	19.7	-63.2	22.2	-71.4	24.9	-80.0
	3	20	5.4	-15.0	6.0	-16.8	6.7	-18.6	7.4	-20.5	8.1	-22.5	8.9	-24.6	9.6	-26.7	11.3	-31.4	13.1	-36.4	15.1	-41.8	17.1	-47.5	19.4	-53.7	21.7	-60.2
	3	50	4.4	-8.7	4.9	-9.7	5.4	-10.8	5.9	-11.9	6.5	-13.1	7.1	-14.3	7.7	-15.5	9.1	-18.2	10.5	-21.2	12.1	-24.3	13.8	-27.6	15.5	-31.2	17.4	-35.0
	3	100	3.6	-8.7	4.0	-9.7	4.4	-10.8	4.8	-11.9	5.3	-13.1	5.8	-14.3	6.3	-15.5	7.4	-18.2	8.6	-21.2	9.9	-24.3	11.2	-27.6	12.7	-31.2	14.2	-35.0
Wall	4	10	8.7	-9.5	9.7	-10.6	10.8	-11.7	11.9	-12.9	13.1	-14.2	14.3	-15.5	15.5	-16.9	18.2	-19.8	21.2	-22.9	24.3	-26.3	27.6	-30.0	31.2	-33.8	35.0	-37.9
	4	20	8.3	-9.1	9.3	-10.1	10.3	-11.2	11.4	-12.4	12.5	-13.6	13.6	-14.8	14.8	-16.2	17.4	-19.0	20.2	-22.0	23.2	-25.3	26.4	-28.7	29.8	-32.4	33.4	-36.4
	4	50	7.8	-8.6	8.7	-9.5	9.7	-10.6	10.7	-11.7	11.7	-12.8	12.8	-14.0	13.9	-15.2	16.3	-17.9	18.9	-20.7	21.7	-23.8	24.7	-27.1	27.9	-30.6	31.3	-34.3
	4	100	7.4	-8.2	8.3	-9.1	9.2	-10.1	10.1	-11.1	11.1	-12.2	12.1	-13.3	13.2	-14.5	15.5	-17.1	18.0	-19.8	20.6	-22.7	23.5	-25.8	26.5	-29.2	29.7	-32.7
	4	500	6.5	-7.3	7.3	-8.1	8.0	-9.0	8.9	-9.9	9.7	-10.8	10.6	-11.9	11.6	-12.9	13.6	-15.1	15.8	-17.6	18.1	-20.2	20.6	-22.9	23.3	-25.9	26.1	-29.0
	5	10	8.7	-11.7	9.7	-13.0	10.8	-14.5	11.9	-15.9	13.1	-17.5	14.3	-19.1	15.5	-20.8	18.2	-24.4	21.2	-28.3	24.3	-32.5	27.6	-37.0	31.2	-41.8	35.0	-46.8
	5	20	8.3	-10.9	9.3	-12.2	10.3	-13.5	11.4	-14.9	12.5	-16.3	13.6	-17.8	14.8	-19.4	17.4	-22.8	20.2	-26.4	23.2	-30.3	26.4	-34.5	29.8	-39.0	33.4	-43.7
	5	50	7.8	-9.9	8.7	-11.0	9.7	-12.2	10.7	-13.4	11.7	-14.7	12.8	-16.1	13.9	-17.5	16.3	-20.6	18.9	-23.9	21.7	-27.4	24.7	-31.2	27.9	-35.2	31.3	-39.5
	5	100	7.4	-9.1	8.3	-10.1	9.2	-11.2	10.1	-12.4	11.1	-13.6	12.1	-14.8	13.2	-16.1	15.5	-19.0	18.0	-22.0	20.6	-25.2	23.5	-28.7	26.5	-32.4	29.7	-36.3

	5	500	6.5	-7.3	7.3	-8.1	8.0	-9.0	8.9	-9.9	9.7	-10.8	10.6	-11.9	11.6	-12.9	13.6	-15.1	15.8	-17.6	18.1	-20.2	20.6	-22.9	23.3	-25.9	26.1	-29.0

Replace the rows for Gable roofs with slopes of 0 to 7 degrees and >7 to 20 degress with the following:

	Zone	Effective	90		95		100		105		110		115		120		130		140		150		160		170		180	
		Wind Area	Pos	Neg	Pos	Neg	Pos	Neg	Pos	Neg	Pos	Neg	Pos	Neg	Pos	Neg	Pos	Neg	Pos	Neg	Pos	Neg	Pos	Neg	Pos	Neg	Pos	Neg
Roof 0 to 7 degrees	1	10	3.6	-13.9	4.0	-15.5	4.4	-17.2	4.8	-19.0	5.3	-20.8	5.8	-22.7	6.3	-24.8	7.4	-29.1	8.6	-33.7	9.9	-38.7	11.2	-44.0	12.7	-49.7	14.2	-55.7
	1	20	3.3	-13.0	3.7	-14.5	4.1	-16.0	4.5	-17.7	5.0	-19.4	5.4	-21.2	5.9	-23.1	7.0	-27.1	8.1	-31.4	9.3	-36.1	10.5	-41.1	11.9	-46.4	13.3	-52.0
	1	50	3.0	-11.8	3.4	-13.1	3.8	-14.5	4.1	-16.0	4.5	-17.6	5.0	-19.2	5.4	-20.9	6.3	-24.5	7.4	-28.4	8.4	-32.6	9.6	-37.1	10.8	-41.9	12.2	-47.0
	1	100	2.8	-10.8	3.1	-12.1	3.5	-13.4	3.8	-14.7	4.2	-16.2	4.6	-17.7	5.0	-19.2	5.9	-22.6	6.8	-26.2	7.8	-30.0	8.9	-34.2	10.0	-38.6	11.3	-43.3
	2	10	3.6	-18.4	4.0	-20.5	4.4	-22.7	4.8	-25.0	5.3	-27.4	5.8	-30.0	6.3	-32.7	7.4	-38.3	8.6	-44.5	9.9	-51.0	11.2	-58.1	12.7	-65.6	14.2	-73.5
	2	20	3.3	-17.2	3.7	-19.2	4.1	-21.2	4.5	-23.4	5.0	-25.7	5.4	-28.1	5.9	-30.6	7.0	-35.9	8.1	-41.6	9.3	-47.8	10.5	-54.3	11.9	-61.4	13.3	-68.8
	2	50	3.0	-15.6	3.4	-17.4	3.8	-19.3	4.1	-21.3	4.5	-23.3	5.0	-25.5	5.4	-27.8	6.3	-32.6	7.4	-37.8	8.4	-43.4	9.6	-49.4	10.8	-55.8	12.2	-62.5
	2	100	2.8	-14.4	3.1	-16.1	3.5	-17.8	3.8	-19.7	4.2	-21.6	4.6	-23.6	5.0	-25.7	5.9	-30.1	6.8	-35.0	7.8	-40.1	8.9	-45.7	10.0	-51.5	11.3	-57.8
	3	10	3.6	-25.0	4.0	-27.9	4.4	-30.9	4.8	-34.1	5.3	-37.4	5.8	-40.9	6.3	-44.5	7.4	-52.2	8.6	-60.6	9.9	-69.6	11.2	-79.1	12.7	-89.4	14.2	-100.2
	3	20	3.3	-22.6	3.7	-25.2	4.1	-28.0	4.5	-30.8	5.0	-33.8	5.4	-37.0	5.9	-40.3	7.0	-47.2	8.1	-54.8	9.3	-62.9	10.5	-71.6	11.9	-80.8	13.3	-90.6
	3	50	3.0	-19.4	3.4	-21.7	3.8	-24.0	4.1	-26.5	4.5	-29.0	5.0	-31.7	5.4	-34.6	6.3	-40.6	7.4	-47.0	8.4	-54.0	9.6	-61.4	10.8	-69.4	12.2	-77.8
	3	100	2.8	-17.0	3.1	-19.0	3.5	-21.0	3.8	-23.2	4.2	-25.5	4.6	-27.8	5.0	-30.3	5.9	-35.6	6.8	-41.2	7.8	-47.3	8.9	-53.9	10.0	-60.8	11.3	-68.2
Roof >7 to 20 degrees	1, 2e	10	5.4	-16.2	6.0	-18.0	6.7	-19.9	7.4	-22.0	8.1	-24.1	8.8	-26.4	9.6	-28.7	11.3	-33.7	13.1	-39.1	15.0	-44.9	17.1	-51.0	19.3	-57.6	21.6	-64.6
	1, 2e	20	4.9	-16.2	5.4	-18.0	6.0	-19.9	6.6	-22.0	7.2	-24.1	7.9	-26.4	8.6	-28.7	10.1	-33.7	11.7	-39.1	13.5	-44.9	15.3	-51.0	17.3	-57.6	19.4	-64.6
	1, 2e	50	4.1	-9.9	4.6	-11.0	5.1	-12.2	5.6	-13.4	6.1	-14.7	6.7	-16.1	7.3	-17.5	8.6	-20.6	10.0	-23.8	11.4	-27.4	13.0	-31.1	14.7	-35.2	16.4	-39.4
	1, 2e	100	3.6	-5.0	4.0	-5.6	4.4	-6.2	4.8	-6.9	5.3	-7.5	5.8	-8.2	6.3	-9.0	7.4	-10.5	8.6	-12.2	9.9	-14.0	11.2	-15.9	12.7	-18.0	14.2	-20.2
	2n,2r,3e	10	5.4	-23.6	6.0	-26.3	6.7	-29.1	7.4	-32.1	8.1	-35.2	8.8	-38.5	9.6	-41.9	11.3	-49.2	13.1	-57.0	15.0	-65.4	17.1	-74.5	19.3	-84.1	21.6	-94.2
	2n,2r,3e	20	4.9	-20.3	5.4	-22.7	6.0	-25.1	6.6	-27.7	7.2	-30.4	7.9	-33.2	8.6	-36.2	10.1	-42.4	11.7	-49.2	13.5	-56.5	15.3	-64.3	17.3	-72.6	19.4	-81.4
	2n,2r,3e	50	4.1	-16.0	4.6	-17.9	5.1	-19.8	5.6	-21.8	6.1	-24.0	6.7	-26.2	7.3	-28.5	8.6	-33.5	10.0	-38.8	11.4	-44.6	13.0	-50.7	14.7	-57.2	16.4	-64.2
	2n,2r,3e	100	3.6	-12.8	4.0	-14.3	4.4	-15.8	4.8	-17.4	5.3	-19.1	5.8	-20.9	6.3	-22.8	7.4	-26.7	8.6	-31.0	9.9	-35.6	11.2	-40.5	12.7	-45.7	14.2	-51.3
	3r	10	5.4	-28.0	6.0	-31.2	6.7	-34.6	7.4	-38.1	8.1	-41.8	8.8	-45.7	9.6	-49.8	11.3	-58.4	13.1	-67.8	15.0	-77.8	17.1	-88.5	19.3	-99.9	21.6	-112.0
	3r	20	4.9	-24.0	5.4	-26.7	6.0	-29.6	6.6	-32.7	7.2	-35.9	7.9	-39.2	8.6	-42.7	10.1	-50.1	11.7	-58.1	13.5	-66.7	15.3	-75.9	17.3	-85.6	19.4	-96.0
	3r	50	4.1	-18.7	4.6	-20.8	5.1	-23.1	5.6	-25.4	6.1	-27.9	6.7	-30.5	7.3	-33.2	8.6	-39.0	10.0	-45.2	11.4	-51.9	13.0	-59.0	14.7	-66.6	16.4	-74.7
	3r	100	3.6	-14.7	4.0	-16.3	4.4	-18.1	4.8	-20.0	5.3	-21.9	5.8	-24.0	6.3	-26.1	7.4	-30.6	8.6	-35.5	9.9	-40.8	11.2	-46.4	12.7	-52.3	14.2	-58.7

For SI: 1 foot = 304.8 mm, 1 square foot = 0.0929 m^2, 1 mile per hour = 0.447 m/s, 1 pound per square foot = 0.0479 kPa.

a. The effective wind area shall be equal to the span length multiplied by an effective width. This width shall be permitted to be not less than one-third the span length. For cladding fasteners, the effective wind area shall not be greater than the area that is tributary to an individual fastener.

b. For effective areas between those given, the load shall be interpolated or the load associated with the lower effective area shall be used.

c. Table values shall be adjusted for height and exposure by multiplying by the adjustment coefficient in Table R301.2(3).

d. See Figure R301.2(7) for location of zones.

e. Plus and minus signs signify pressures acting toward and away from the building surfaces.
f. Positive and negative design wind pressures shall not be less than 10 psf.
g. Where the ratio of the building mean roof height to the building length or width is less than 0.8, uplift loads are allowed to be calculated in accordance with ASCE 7.

FIGURE R301.2 (2)
SEISMIC DESIGN CATEGORIES—SITE CLASS D

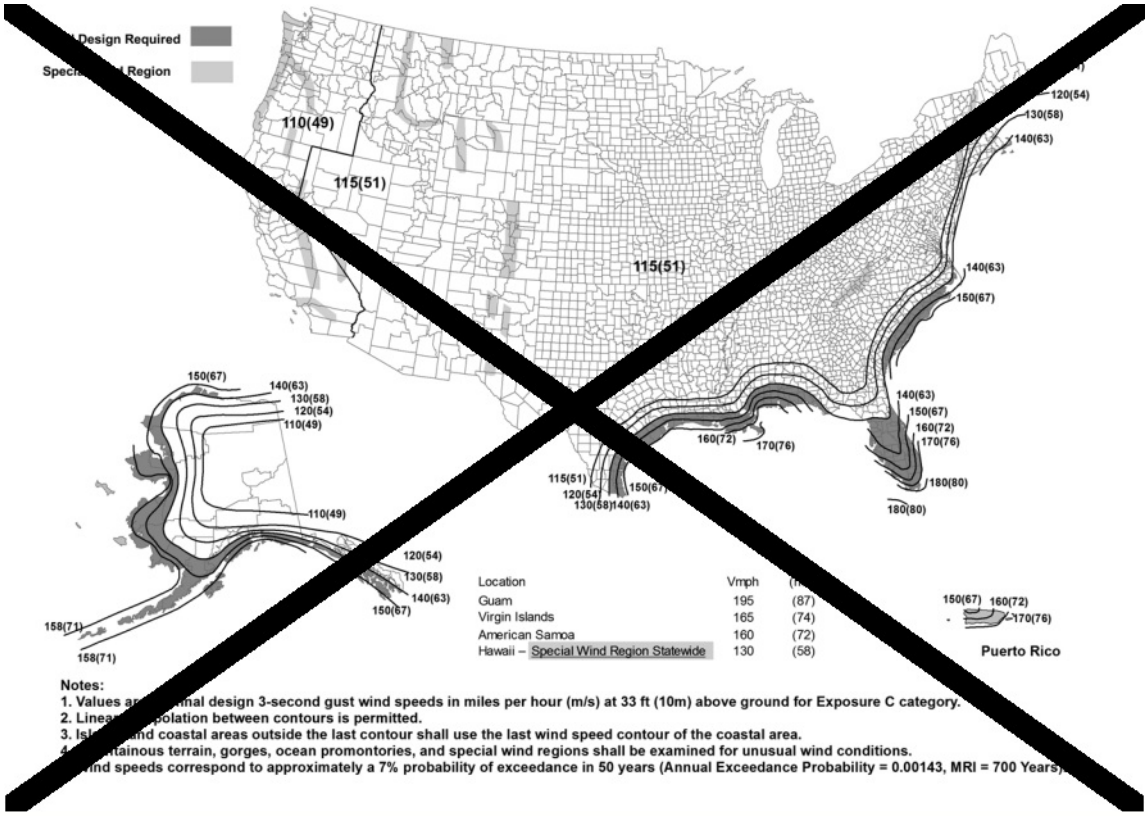

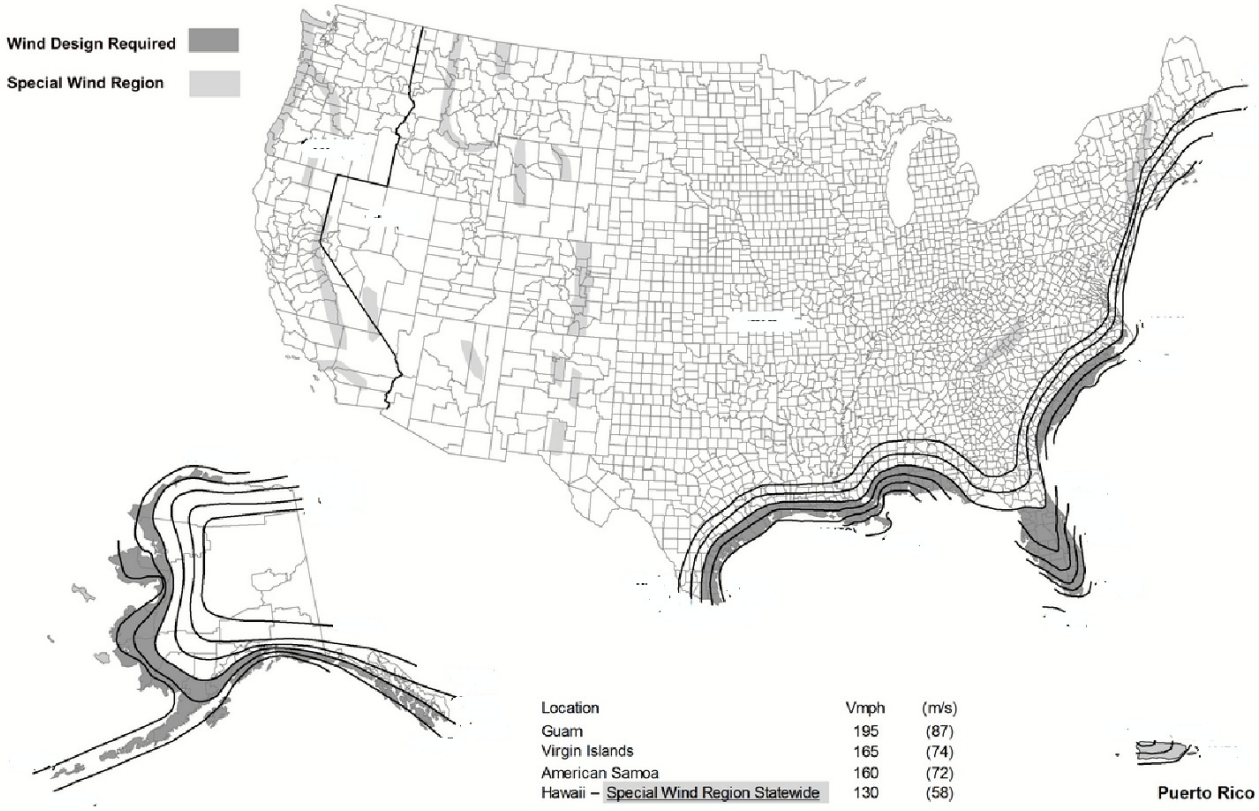

R301.2.1 Wind design criteria. Buildings and portions thereof shall be constructed in accordance with the wind provisions of this code using the ultimate design wind speed in Table R301.2(1) as determined from Figure R301.2(4)A. The structural provisions of this code for wind loads are not permitted where wind design is required as specified in Section R301.2.1.1. Where different construction methods and structural materials are used for various portions of a building, the applicable requirements of this section for each portion shall apply. Where not otherwise specified, the wind loads listed in Table R301.2(2) adjusted for height and exposure using Table R301.2(3) shall be used to determine design load performance requirements for wall coverings, curtain walls, roof coverings, exterior windows, skylights, garage doors and exterior doors. Asphalt shingles shall be designed for wind speeds in accordance with Section R905.2.4. A continuous load path shall be provided to transmit the applicable uplift forces in Section R802.11.1 from the roof assembly to the foundation. Where ultimate design wind speeds in Figure R301.2(4)A are less than the lowest wind speed indicated in the prescriptive provisions of this code, the lowest wind speed indicated in the prescriptive provisions of this code shall be permitted to be used.

TABLE R301.2.1.5.1
ULTIMATE DESIGN WIND SPEED MODIFICATION FOR TOPOGRAPHIC WIND EFFECT[a, b]

ULTIMATE DESIGN WIND SPEED FROM FIGURE R301.2(4)A (mph)	AVERAGE SLOPE OF THE TOP HALF OF HILL, RIDGE OR ESCARPMENT (percent)						
	0.10	0.125	0.15	0.175	0.20	0.23	0.25
	Required ultimate design wind speed-up, modified for topographic wind speed-up (mph)						
95	114	119	123	127	131	137	140
100	120	125	129	134	138	144	147
105	126	131	135	141	145	151	154
110	132	137	142	147	152	158	162
115	138	143	148	154	159	165	169
120	144	149	155	160	166	172	176
130	156	162	168	174	179	N/A	N/A
140	168	174	181	N/A	N/A	N/A	N/A
150	180	N/A	N/A	N/A	N/A	N/A	N/A

For SI: 1 mile per hour = 0.447 m/s, 1 foot = 304.8 mm.
a. Table applies to a feature height of 500 feet or less and dwellings sited a distance equal or greater than half the feature height.
b. Where the ultimate design wind speed as modified by Table R301.2.1.5.1 equals or exceeds 140 miles per hour, the building shall be considered as "wind design required" in accordance with Section R301.2.1.1.

TABLE R602.10.1.3
BRACED WALL LINE SPACING

APPLICATION	CONDITION	BUILDING TYPE	BRACED WALL LINE SPACING CRITERIA	
			Maximum Spacing	Exception to Maximum Spacing
Wind bracing	Ultimate design wind speed ~~100 mph to~~	Detached, townhouse	60 feet	None
Seismic bracing	SDC A – C	Detached	Use wind bracing	
	SDC A – B	Townhouse	Use wind bracing	
	SDC C	Townhouse	35 feet	Up to 50 feet when length of required bracing per Table R602.10.3(3) is adjusted in accordance with Table R602.10.3(4).
	SDC D_0 , D_1 , D_2	Detached, townhouses, one- and two-story only	25 feet	Up to 35 feet to allow for a single room not to exceed 900 square feet. Spacing of all other braced wall lines shall not exceed 25 feet.
	SDC D_0 , D_1 , D_2	Detached, townhouse	25 feet	Up to 35 feet when length of required bracing per Table R602.10.3(3) is adjusted in accordance with Table R602.10.3(4).

For SI: 1 foot = 304.8 mm, 1 square foot = 0.0929 m^2 , 1 mile per hour = 0.447 m/s.

TABLE R602.10.3 (1)
BRACING REQUIREMENTS BASED ON WIND SPEED

· EXPOSURE CATEGORY B · 30-FOOT MEAN ROOF HEIGHT · 10-FOOT WALL HEIGHT · 2 BRACED WALL LINES			MINIMUM TOTAL LENGTH (FEET) OF BRACED WALL PANELS REQUIRED ALONG EACH BRACED WALL LINE[a]			
Ultimate Design Wind Speed (mph)	Story Location	Braced Wall Line Spacing (feet)	Method LIB[b]	Method GB	Methods DWB, WSP, SFB, PBS, PCP, HPS, BV-WSP, ABW, PFH, PFC, CS-SFB[c]	Methods CS-WSP, CS-G, CS-PF

≤110		10	3.5	3.5	2.0	1.5
		20	6.0	6.0	3.5	3.0
		30	8.5	8.5	5.0	4.5
		40	11.5	11.5	6.5	5.5
		50	14.0	14.0	8.0	7.0
		60	16.5	16.5	9.5	8.0
		10	6.5	6.5	3.5	3.0
		20	11.5	11.5	6.5	5.5
		30	16.5	16.5	9.5	8.0
		40	21.5	21.5	12.5	10.5
		50	26.5	26.5	15.5	13.0
		60	31.5	31.5	18.0	15.5
		10	NP	9.5	5.5	4.5
		20	NP	17.0	10.0	8.5
		30	NP	24.5	14.0	12.0
		40	NP	32.0	18.5	15.5
		50	NP	39.5	22.5	19.0
		60	NP	46.5	26.5	23.0
≤ 115		10	3.5	3.5	2.0	2.0
		20	6.5	6.5	3.5	3.5
		30	9.5	9.5	5.5	4.5
		40	12.5	12.5	7.0	6.0
		50	15.0	15.0	9.0	7.5
		60	18.0	18.0	10.5	9.0
	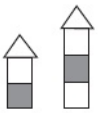	10	7.0	7.0	4.0	3.5
		20	12.5	12.5	7.5	6.5
		30	18.0	18.0	10.5	9.0
		40	23.5	23.5	13.5	11.5
		50	29.0	29.0	16.5	14.0
		60	34.5	34.5	20.0	17.0
		10	NP	10.0	6.0	5.0
		20	NP	18.5	11.0	9.0
		30	NP	27.0	15.5	13.0
		40	NP	35.0	20.0	17.0
		50	NP	43.0	24.5	21.0
		60	NP	51.0	29.0	25.0

· EXPOSURE CATEGORY B · 30-FOOT MEAN ROOF HEIGHT · 10-FOOT WALL HEIGHT · 2 BRACED WALL LINES			MINIMUM TOTAL LENGTH (FEET) OF BRACED WALL PANELS REQUIRED ALONG EACH BRACED WALL LINE[a]			
Ultimate Design Wind Speed (mph)	**Story Location**	**Braced Wall Line Spacing (feet)**	**Method LIB[b]**	**Method GB**	**Methods DWB, WSP, SFB, PBS, PCP, HPS, BV-WSP, ABW, PFH, PFG, CS-SFB[c]**	**Methods CS-WSP, CS-G, CS-PF**
≤ 120		10	4.0	4.0	2.5	2.0
		20	7.0	7.0	4.0	3.5
		30	10.5	10.5	6.0	5.0
		40	13.5	13.5	8.0	6.5
		50	16.5	16.5	9.5	8.0
		60	19.5	19.5	11.5	9.5
		10	7.5	7.5	4.5	3.5
		20	14.0	14.0	8.0	7.0
		30	20.0	20.0	11.5	9.5
		40	25.5	25.5	15.0	12.5
		50	31.5	31.5	18.0	15.5
		60	37.5	37.5	21.5	18.5
		10	NP	11.0	6.5	5.5
		20	NP	20.5	11.5	10.0
		30	NP	29.0	17.0	14.5
		40	NP	38.0	22.0	18.5

		50	NP	47.0	27.0	23.0
		60	NP	55.5	32.0	27.0
≤130		10	4.5	4.5	2.5	2.5
		20	8.5	8.5	5.0	4.0
		30	12.0	12.0	7.0	6.0
		40	15.5	15.5	9.0	7.5
		50	19.5	19.5	11.0	9.5
		60	23.0	23.0	13.0	11.0
		10	8.5	8.5	5.0	4.5
		20	16.0	16.0	9.5	8.0
		30	23.0	23.0	13.5	11.5
		40	30.0	30.0	17.5	15.0
		50	37.0	37.0	21.5	18.0
		60	44.0	44.0	25.0	21.5
		10	NP	13.0	7.5	6.5
		20	NP	24.0	13.5	11.5
		30	NP	34.5	19.5	17.0
		40	NP	44.5	25.5	22.0
		50	NP	55.0	31.5	26.5
		60	NP	65.0	37.5	31.5

· EXPOSURE CATEGORY B **· 30-FOOT MEAN ROOF HEIGHT** **· 10-FOOT WALL HEIGHT** **· 2 BRACED WALL LINES**			**MINIMUM TOTAL LENGTH (FEET) OF BRACED WALL PANELS REQUIRED ALONG EACH BRACED WALL LINE[a]**			
Ultimate Design Wind Speed (mph)	**Story Location**	**Braced Wall Line Spacing (feet)**	**Method LIB[b]**	**Method GB**	**Methods DWB, WSP, SFB, PBS, PCP, HPS, BV-WSP, ABW, PFH, PFG, CS-SFB[c]**	**Methods CS-WSP, CS-G, CS-PF**
< 140		10	5.5	5.5	3.0	2.5
		20	10.0	10.0	5.5	5.0
		30	14.0	14.0	8.0	7.0
		40	18.0	18.0	10.5	9.0
		50	22.5	22.5	13.0	11.0
		60	26.5	26.5	15.0	13.0
		10	10.0	10.0	6.0	5.0
		20	18.5	18.5	11.0	9.0
		30	27.0	27.0	15.5	13.0
		40	35.0	35.0	20.0	17.0
		50	43.0	43.0	24.5	21.0
		60	51.0	51.0	29.0	25.0
		10	NP	15.0	8.5	7.5
		20	NP	27.5	16.0	13.5
		30	NP	39.5	23.0	19.5
		40	NP	51.5	29.5	25.0
		50	NP	63.5	36.5	31.0
		60	NP	75.5	43.0	36.5

Add the following to Table R602.3(1)

<95 mph	Top Floor Roof Only Above	10	2.5	2.5	1.5	1.5
		20	4.5	4.5	2.5	2.5
		30	6.5	6.5	4.0	3.5
		40	8.5	8.5	5.0	4.0
		50	10.5	10.5	6.0	5.0
		60	12.5	12.5	7.0	6.0
	One Story + Roof Above	10	5.0	5.0	3.0	2.5
		20	8.5	8.5	5.0	4.5
		30	12.5	12.5	7.0	6.0
		40	16.0	16.0	9.5	8.0
		50	20.0	20.0	11.5	10.0

		60	23.5	23.5	13.5	11.5
	Two Story + Roof Above	10	NP	7.0	4.0	3.5
		20	NP	13.0	7.5	6.5
		30	NP	18.5	10.5	9.0
		40	NP	24.0	13.5	11.5
		50	NP	29.5	17.0	14.5
		60	NP	35.0	20.0	17.0

For SI: 1 inch = 25.4 mm, 1 foot = 304.8 mm, 1 mile per hour = 0.447 m/s.
a. Linear interpolation shall be permitted.
b. Method LIB shall have gypsum board fastened to not less than one side with nails or screws in accordance with Table R602.3(1) for exterior sheathing or Table R702.3.5 for interior gypsum board. Spacing of fasteners at panel edges shall not exceed 8 inches.
c. Where a braced wall line has parallel braced wall lines on one or both sides of differing dimensions, the average dimension shall be permitted to be used for braced wall line spacing.

TABLE R602.10.6.4
TENSION STRAP CAPACITY FOR RESISTING WIND PRESSURES PERPENDICULAR TO METHODS PFH, PFG AND CS-PF BRACED WALL PANELS

MINIMUM WALL STUD FRAMING NOMINAL SIZE AND GRADE	MAXIMUM PONY WALL HEIGHT (feet)	MAXIMUM TOTAL WALL HEIGHT (feet)	MAXIMUM OPENING WIDTH (feet)	TENSION STRAP CAPACITY REQUIRED (pounds)[a, b]					
				Ultimate Design Wind Speed V_{ult} (mph)					
				≤ 110	115	130	110	115	130
				Exposure B			Exposure C		
2 × 4 No. 2 Grade	0	10	18	1,000	1,000	1,000	1,000	1,000	1,050
	1	10	9	1,000	1,000	1,000	1,000	1,000	1,750
			16	1,000	1,025	2,050	2,075	2,500	3,950
			18	1,000	1,275	2,375	2,400	2,850	DR
	2	10	9	1,000	1,000	1,475	1,500	1,875	3,125
			16	1,775	2,175	3,525	3,550	4,125	DR
			18	2,075	2,500	3,950	3,975	DR	DR
	2	12	9	1,150	1,500	2,650	2,675	3,175	DR
			16	2,875	3,375	DR	DR	DR	DR
			18	3,425	3,975	DR	DR	DR	DR
	4	12	9	2,275	2,750	DR	DR	DR	DR
			12	3,225	3,775	DR	DR	DR	DR
2 × 6 Stud Grade	2	12	9	1,000	1,000	1,700	1,700	2,025	3,050
			16	1,825	2,150	3,225	3,225	3,675	DR
			18	2,200	2,550	3,725	3,750	DR	DR
	4	12	9	1,450	1,750	2,700	2,725	3,125	DR
			16	2,050	2,400	DR	DR	DR	DR
			18	3,350	3,800	DR	DR	DR	DR

For SI: 1 inch = 25.4 mm, 1 mile per hour = 0.447 m/s.
a. DR = Design Required.
b. Straps shall be installed in accordance with manufacturer's recommendations.

TABLE R703.3.1
LIMITS FOR ATTACHMENT PER TABLE R703.3(1)

MAXIMUM MEAN ROOF HEIGHT			
Ultimate Wind Speed (mph 3-second gust)	Exposure		
	B	C	D
95	NL	NL	NL
100	NL	NL	NL
105	NL	NL	NL
100	NL	NL	40'
115	NL	50′	20′
120	NL	30′	DR
130	60′	15′	DR
140	35′	DR	DR

For SI: 1 foot = 304.8 mm, 1 mile per hour = 0.447 m/s.
NL = Not limited by Table R703.3.1, DR = Design required.

TABLE R802.11
RAFTER OR TRUSS UPLIFT CONNECTION FORCES FROM WIND (ASD) (POUNDS PER CONNECTION)[a, b, c, d, e, f, g, h]

RAFTER OR TRUSS SPACING	ROOF SPAN (feet)	EXPOSURE B									
		Ultimate Design Wind Speed V_{ULT} (mph)									
		110		115		120		130		140	
		Roof Pitch		Roof Pitch		Roof Pitch		Roof Pitch		Roof Pitch	
			≥5:12		≥5:12		≥5:12		≥5:12		≥5:12
12″ o.c.	12	48	43	59	53	70	64	95	88	122	113
	18	59	52	74	66	89	81	122	112	157	146
	24	71	62	89	79	108	98	149	137	192	178
	28	79	69	99	88	121	109	167	153	216	200
	32	86	75	109	97	134	120	185	170	240	222
	36	94	82	120	106	146	132	203	186	264	244
	42	106	92	135	120	166	149	230	211	300	278
	48	118	102	151	134	185	166	258	236	336	311
16″ o.c.	12	64	57	78	70	93	85	126	117	162	150
	18	78	69	98	88	118	108	162	149	209	194
	24	94	82	118	105	144	130	198	182	255	237
	28	105	92	132	117	161	145	222	203	287	266
	32	114	100	145	129	178	160	246	226	319	295
	36	125	109	160	141	194	176	270	247	351	325
	42	141	122	180	160	221	198	306	281	399	370
	48	157	136	201	178	246	221	343	314	447	414
24″ o.c.	12	96	86	118	106	140	128	190	176	244	226
	18	118	104	148	132	178	162	244	224	314	292
	24	142	124	178	158	216	196	298	274	384	356
	28	158	138	198	176	242	218	334	306	432	400
	32	172	150	218	194	268	240	370	340	480	444
	36	188	164	240	212	292	264	406	372	528	488
	42	212	184	270	240	332	298	460	422	600	556
	48	236	204	302	268	370	332	516	472	672	622

RAFTER OR TRUSS SPACING	ROOF SPAN (feet)	EXPOSURE C									
		Ultimate Design Wind Speed V_{ULT} (mph)									
		110		115		120		130		140	
		Roof Pitch		Roof Pitch		Roof Pitch		Roof Pitch		Roof Pitch	
			≥5:12		≥5:12		≥5:12		≥5:12		≥ 5:12
12″ o.c.	12	95	88	110	102	126	118	161	151	198	186
	18	121	111	141	131	163	151	208	195	257	242
	24	148	136	173	160	200	185	256	239	317	298
	28	166	152	195	179	225	208	289	269	358	335
	32	184	168	216	199	249	231	321	299	398	373
	36	202	185	237	219	274	254	353	329	438	411
	42	229	210	269	248	312	289	402	375	499	468
	48	256	234	302	278	349	323	450	420	560	524
16″ o.c.	12	126	117	146	136	168	157	214	201	263	247
	18	161	148	188	174	217	201	277	259	342	322
	24	197	181	230	213	266	246	340	318	422	396
	28	221	202	259	238	299	277	384	358	476	446
	32	245	223	287	265	331	307	427	398	529	496
	36	269	246	315	291	364	338	469	438	583	547
	42	305	279	358	330	415	384	535	499	664	622
	48	340	311	402	370	464	430	599	559	745	697
24″ o.c.	12	190	176	220	204	252	236	322	302	396	372
	18	242	222	282	262	326	302	416	390	514	484
	24	296	272	346	320	400	370	512	478	634	596
	28	332	304	390	358	450	416	578	538	716	670
	32	368	336	432	398	498	462	642	598	796	746
	36	404	370	474	438	548	508	706	658	876	822
	42	458	420	538	496	624	578	804	750	998	936

	48	512	468	604	556	698	646	900	840	1120	1048

Add the following columns to Table R802.11:

RAFTER OR TRUSS SPACING	ROOF SPAN (feet)	EXPOSURE B					
		Ultimate Design Wind Speed Vult(mph)					
		95		100		105	
		Roof Pitch		Roof Pitch		Roof Pitch	
		<5:12	>5:12	<5:12	>5:12	<5:12	>5:12
12" o.c.	12	17	13	27	23	37	32
	18	19	14	32	26	45	39
	24	21	14	36	29	53	45
	28	22	15	40	32	59	50
	32	23	15	43	34	64	54
	36	25	15	47	37	70	59
	42	27	16	52	40	78	66
	48	29	17	57	44	87	72
16" o.c.	12	23	18	36	30	49	43
	18	25	18	42	34	60	51
	24	28	19	49	39	71	60
	28	29	19	53	42	78	66
	32	31	20	58	46	86	72
	36	33	21	62	49	93	78
	42	35	22	69	54	104	87
	48	38	22	76	59	116	97
24" o.c.	12	35	27	54	45	74	65
	18	38	27	63	52	90	77
	24	41	28	73	59	106	91
	28	44	29	80	63	117	99
	32	47	30	87	68	129	109
	36	49	31	93	73	140	117
	42	53	32	104	81	157	131
	48	57	34	114	88	173	145

RAFTER OR TRUSS SPACING	ROOF SPAN (feet)	EXPOSURE C					
		Ultimate Design Wind Speed Vult(mph)					
		95		100		105	
		Roof Pitch		Roof Pitch		Roof Pitch	
		<5:12	>5:12	<5:12	>5:12	<5:12	>5:12
12" o.c.	12	52	47	66	60	80	73
	18	65	58	83	75	101	93
	24	78	69	100	90	123	112
	28	87	76	112	100	138	125
	32	96	84	124	111	153	139
	36	105	92	136	121	168	152
	42	118	104	153	137	190	172
	48	131	115	171	153	212	192
16" o.c.	12	70	63	87	80	106	98
	18	87	77	110	100	135	124
	24	104	92	134	120	165	150
	28	116	102	150	134	185	167
	32	128	112	165	148	204	185
	36	140	123	181	162	224	203
	42	157	138	204	183	253	230
	48	175	153	228	204	283	257
24" o.c.	12	104	94	131	120	159	147
	18	130	116	166	150	203	185
	24	156	138	200	180	247	225
	28	174	153	224	200	277	250

	32	192	168	247	221	306	277
	36	210	184	271	243	336	305
	42	236	207	306	274	380	345
	48	263	230	342	306	425	385

For SI: 1 inch = 25.4 mm, 1 foot = 304.8 mm, 1 mile per hour = 0.447 m/s, 1 pound = 0.454 kg, 1 pound per square foot = 47.9 N/m^2, 1 plf = 14.6 N/m.

a. The uplift connection forces are based on a maximum 33-foot mean roof height and Wind Exposure Category B or C. For Exposure D, the uplift connection force shall be selected from the Exposure C portion of the table using the next highest tabulated ultimate design wind speed. The adjustment coefficients in Table R301.2(3) shall not be used to multiply the tabulated forces for Exposures C and D or for other mean roof heights.

b. The uplift connection forces include an allowance for roof and ceiling assembly dead load of 15 psf.

c. The tabulated uplift connection forces are limited to a maximum roof overhang of 24 inches.

d. The tabulated uplift connection forces shall be permitted to be multiplied by 0.75 for connections not located within 8 feet of building corners.

e. For buildings with hip roofs with 5:12 and greater pitch, the tabulated uplift connection forces shall be permitted to be multiplied by 0.70. This reduction shall not be combined with any other reduction in tabulated forces.

f. For wall-to-wall and wall-to-foundation connections, the uplift connection force shall be permitted to be reduced by 60 plf for each full wall above.

g. Linear interpolation between tabulated roof spans and wind speeds shall be permitted.

h. The tabulated forces for a 12-inch on-center spacing shall be permitted to be used to determine the uplift load in pounds per linear foot.

TABLE AH106.4 (1)

DESIGN WIND PRESSURES FOR SCREEN ENCLOSURE FRAMING[a, b, e, f, g, h]

LOAD CASE	WALL	ULTIMATE DESIGN WIND SPEED, V_{ult}(mph)											
		90	95	100	105	110	120	130	140	150	160	170	180
		Exposure Category B Design Pressure (psf)											
A[c]	Windward and leeward walls (flow thru) and windward wall (nonflow thru) *L/W* = 0-1	5	6	6	7	8	9	11	13	14	16	18	21
A[c]	Windward and leeward walls (flow thru) and windward wall (nonflow thru) *L/W* = 2	6	7	7	8	9	11	12	14	16	19	21	24
B[d]	Windward: Nongable roof	7	8	9	10	11	13	15	18	21	23	26	30
B[d]	Windward: Gable roof	10	10	11	13	14	16	19	22	26	29	33	37
	ROOF												
All[e]	Roof-screen	2	2	2	3	3	3	4	4	5	6	7	7
All[e]	Roof-solid	6	6	7	8	8	10	12	13	15	18	20	22

For SI: 1 mile per hour = 0.44 m/s, 1 pound per square foot = 0.0479 kPa, 1 foot = 304.8 mm.

a. Design pressure shall be not less than 10 psf in accordance with Section AH106.4.1.

b. Loads are applicable to screen enclosures with a mean roof height of 30 feet or less in Exposure B. For screen enclosures of different heights or exposure, the pressures given shall be adjusted by multiplying the table pressure by the adjustment factor given in Table AH106.4(2).

c. For Load Case A flow thru condition, the pressure given shall be applied simultaneously to both the upwind and downwind screen walls acting in the same direction as the wind. The structure shall also be analyzed for wind coming from the opposite direction. For the nonflow thru condition, the screen enclosure wall shall be analyzed for the load applied acting toward the interior of the enclosure.

d. For Load Case B, the table pressure multiplied by the projected frontal area of the screen enclosure is the total drag force, including drag on screen surfaces parallel to the wind, that must be transmitted to the ground. Use Load Case A for members directly supporting the screen surface perpendicular to the wind. Load Case B loads shall be applied only to structural members that carry wind loads from more than one surface.

e. The roof structure shall be analyzed for the pressure given occurring both upward and downward.

f. Table pressures are MWFRS loads. The design of solid roof panels and their attachments shall be based on component and cladding loads for enclosed or partially enclosed structures as appropriate.

g. Table pressures apply to 20-inch by 20-inch by 0.013-inch mesh screen. For 18-inch by 14-inch by 0.013-inch mesh screen, pressures on screen surfaces shall be permitted to be multiplied by 0.88. For screen densities greater than 20 inches by 20 inches by 0.013 inch, pressures for enclosed buildings shall be used.

h. Linear interpolation shall be permitted.

~~**AH106.4.1**~~

~~**ULTIMATE DESIGN WIND SPEEDS FOR PATIO COVERS AND SCREEN ENCLOSURES**~~

[redacted]

FIGURE AH106.4.1

Ultimate Design Wind Speeds for Patio Covers and Screen Enclosures

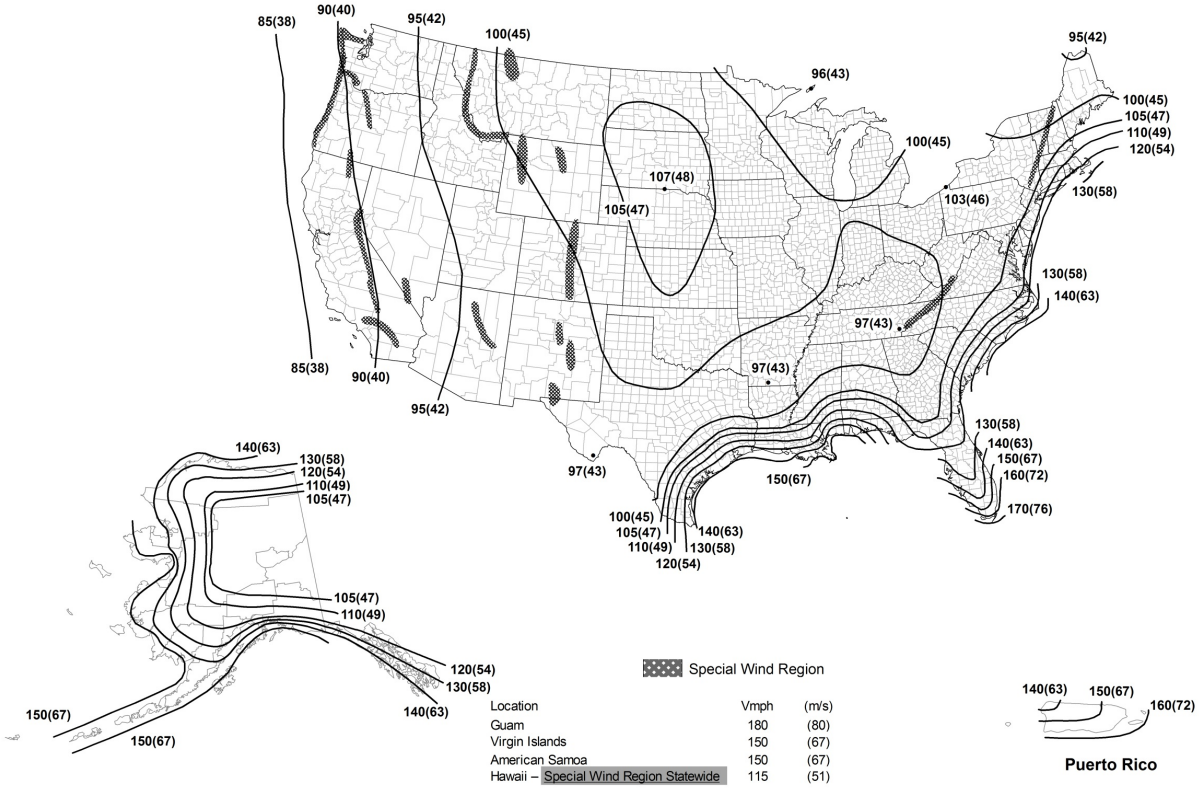

Location	Vmph	(m/s)
Guam	180	(80)
Virgin Islands	150	(67)
American Samoa	150	(67)
Hawaii – Special Wind Region Statewide	115	(51)

Notes:
1. Values are nominal design 3-second gust wind speeds in miles per hour (m/s) at 33 ft (10m) above ground for Exposure C category.
2. Linear interpolation is permitted between contours. Point values are provided to aid with interpolation.
3. Islands, coastal areas, and land boundaries outside the last contour shall use the last wind speed contour.
4. Mountainous terrain, gorges, ocean promontories, and special wind regions shall be examined for unusual wind conditions.
5. Wind speeds correspond to approximately a 15% probability of exceedance in 50 years (Annual Exceedance Probability = 0.00333, MRI = 300 Years).
6. Location-specific basic wind speeds shall be permitted to be determined using www.atcouncil.org/windspeed

Commenter's Reason: This proposal coordinates the wind design criteria in the IRC with the wind design criteria (ASCE 7-16) already recommended for inclusion in the IBC. This public comment submission includes an updated design wind speed map for Risk category II buildings, replacement Tables R301.2(2) and R301.2(3) that are consistent with ASCE 7-16, as well as edits to a number of additional IRC provisions that address the lower design wind speeds contained in the ASCE 7-16 design wind speed map. This addresses the objection about completeness of revisions raised by NAHB at the Committee hearings.
The new design wind speed maps developed for ASCE 7-10 and updated in ASCE 7-16 to adjust design wind speeds in the Northeast and away from the hurricane coastline together with changes in roof uplift pressure coefficients in ASCE 7-16 represent a more than 10-year effort to apply updated research and modeling of winds and roof uplift pressures. The ASCE 7-16 design wind speed map includes the latest hurricane risk modeling and a detailed re-analysis of inland wind risks. Wind tunnel modeling of low-rise buildings has also been significantly improved thanks to modern instrumentation and validation made possible by data obtained from field measurements at Texas Tech University and other full-scale sites. Validated wind tunnel studies have been conducted at the University of Western Ontario (where the original data used for earlier editions of the ASCE 7 standard were also generated) for a much broader range of roof slopes for both Gable and Hip roofs. Much of this data has been assimilated into a database maintained by the National Institute of Standards and Technology. A third party independent evaluation of the new roof uplift pressures was commissioned during the ASCE 7 Committee work to codify the values and found that the science was correct and the results were accurate. Following that review, everyone on the ASCE 7-16 Wind Loads Subcommittee indicated they believed the new design pressure coefficients were technically correct. The effects of these improvements represent a mixture of decreases and increases in loads.

The new design wind speed maps produce decreases in design wind loads throughout most of the country. Note that since wind load changes are proportional to the velocity squared, the effect of decreases in design wind speed are amplified. Design wind loads away from the hurricane coastline for the cities listed in Table 1 were decreased by between 7 percent and 25 percent with an average reduction of 16 percent. Near the hurricane coastline, Table 2 shows that wind loads for homes built in terrain exposure B or terrain exposure C at the locations indicated were reduced by between 13 percent and 37 percent with an average reduction of 24 percent. With the re-introduction of terrain exposure D along the hurricane coastline in ASCE 7-10 (based on new data on surface roughness associated with design level winds over the ocean), the average decrease in wind loads for the 600 feet of land adjacent to the hurricane coastline was reduced to 11 percent and the loads actually increase by 1 percent at one location shown in Table 2.

The component and cladding roof uplift pressure coefficients included in ASCE 7-16 are generally higher than those in ASCE 7-10 or earlier editions of ASCE 7. However, the Main Wind Force Resisting System pressure coefficients and the wall pressure coefficients remain the same as those used in earlier editions of ASCE 7 so the reductions noted in the previous paragraph apply to those loads. The impact of the higher component and cladding loads is probably best represented for most residential construction by comparing the increases in corner zone pressure coefficients since these are generally the highest and are frequently used to determine sheathing thickness requirements, establish roof sheathing nailing patterns, and the attachment requirements for tile or metal roofing. Increases in roof uplift pressure coefficients do not affect the product approvals for asphalt shingles so there is no impact for them. Table 3 provides the net change in Zone 3 uplift pressures and in tile uplift loads for the same inland locations shown in Table 1. Table 4 provides similar information for the hurricane coastline locations listed in Table 2. The net change includes the reduction in loads associated with the new design wind speed maps plus the increases associated with higher zone 3 roof uplift pressure coefficients in ASCE 7-16. Table 3 indicates that for the inland locations listed, the average net increase in roof uplift component and cladding loads is 16 percent. Table 4 indicates that the average net increase in roof uplift component and cladding loads is 6 percent for homes in terrain exposures B or C and 23 percent for

homes within 600 feet of the hurricane coastline. Similarly, the average net increases in Tile uplift loads based on the equation contained in the IBC, at the locations listed in Tables 3 and 4, is 7 percent for the inland locations (Table 3). There is an average reduction of 2 percent in tile uplift loads for homes in exposures B and C and a net average increase of 13 percent for homes in exposure D for the hurricane coastline locations listed (Table 4).

It should be noted that the acceptable performance of housing built over the last decade and a half referred to by opponents to this proposal have been based on ASCE 7-05 wind load provisions and mapping which as shown above are not that different from what would be required to meet ASCE 7-16 wind load provisions except for areas where exposure D would apply along the hurricane coastline. It is precisely these areas where damage and losses are the greatest when hurricanes strike and the damage usually starts with the roof components and cladding.

Table 1. Wind Load Changes at Selected Inland Cities due to Changes in ASCE 7-16 Design Wind Speed Map

Location	3-Second Gust Design Wind Speeds (mph)		Percent Decrease in Loads from Map Changes (ASCE 7-16 vs ASCE 7-05)
	ASCE 7-98 through -05	ASCE 7-16	Exposures B, C, and D
Atlanta, GA	90	107	-15%
Birmingham, AL	90	108	-14%
Bismarck, ND	90	112	-7%
Buffalo, NY	90	110	-10%
Chicago, IL	90	107	-15%
Cincinnati, OH	90	106	-17%
Cleveland, OH	90	109	-12%
Dallas, TX	90	106	-17%
Denver, CO	90	107	-15%
Indianapolis, IN	90	106	-17%
Jackson, MS	92	110	-14%
Knoxville, TN	90	105	-18%
Little Rock, AR	90	105	-18%
Los Angeles, CA	85	95	-25%
Memphis, TN	90	106	-17%
Minneapolis, MN	90	109	-12%
Oklahoma City, OK	90	109	-12%
Omaha, NE	90	112	-7%
Phoenix, AZ	90	102	-23%
Portland, OR	85	97	-22%
San Diego, CA	85	97	-22%
Seattle, WA	85	98	-20%
Shreveport, LA	90	105	-18%
St Louis, MO	90	107	-15%

Table 2. Wind Load Changes at Selected Hurricane Prone Locations due to Changes in ASCE 7-16 Design Wind Speed Map

Location	3-Second Gust Design Wind Speeds (mph)		Percent Decrease in Loads from Map Changes (ASCE 7-16 vs ASCE 7-05)	
	ASCE 7-98 through -05	ASCE 7-16	Exposures B & C	Exposure D
Bar Harbor, ME	97	110	-23%	-10%
Boston, MA	106	120	-23%	-11%
Hyannis, MA	117	132	-24%	-11%
New Port, RI	117	130	-26%	-14%
Southampton, NY	120	130	-30%	-18%
Atlantic City, NJ	114	125	-28%	-16%

Virginia Beach, VA	115	125	-29%	-18%
Kill Devil Hills, NC	122	135	-27%	-15%
Beaufort, NC	133	145	-29%	-17%
Wrightsville Beach, NC	132	145	-28%	-16%
Folly Beach, SC	132	150	-23%	-10%
Charleston, SC	130	146	-24%	-12%
Hilton Head, SC	128	140	-28%	-17%
Savanna, GA	125	135	-30%	-19%
Atlantic Beach, FL	120	130	-30%	-18%
Jacksonville, FL	115	125	-29%	-18%
Daytona Beach, FL	122	136	-25%	-14%
Melbourne, FL	127	150	-16%	-3%
West Palm Beach, FL	144	170	-16%	-3%
Miami Beach, FL	147	170	-20%	-7%
Miami, FL	147	170	-20%	-7%
Key West, FL	150	180	-14%	0%
Naples, FL	135	160	-16%	-2%
Sarasota, FL	128	150	-18%	-4%
Longboat Key, FL	130	150	-20%	-7%
Tampa, FL	120	142	-16%	-3%
St. Petersburg, FL	128	145	-23%	-11%
Panama City, FL	129	132	-37%	-27%
Pensacola, FL	140	150	-31%	-20%
Gulf Shores, AL	145	160	-27%	-15%
Mobile, AL	130	152	-18%	-5%
Biloxi, MS	138	160	-19%	-6%
New Orleans, LA	125	140	-25%	-13%
Lake Charles, LA	108	130	-13%	1%
Galveston, TX	131	150	-21%	-9%
Port Aransas, TX	134	150	-25%	-13%

Table 3. Net Wind Load Changes at Selected Inland Cities due to Changes in ASCE 7-16 Design Wind Speed Map and Roof Uplift Pressure Coefficients

Location	Net Changes in Tile Uplift Loads	Net Changes in Zone 3 Roof Pressures
	Exposures B, C, and D	Exposures B, C, and D
Atlanta, GA	8%	17%
Birmingham, AL	10%	20%
Bismarck, ND	19%	29%
Buffalo, NY	15%	24%
Chicago, IL	8%	17%
Cincinnati, OH	6%	15%
Cleveland, OH	12%	22%

Dallas, TX	6%	15%
Denver, CO	8%	17%
Indianapolis, IN	6%	15%
Jackson, MS	10%	19%
Knoxville, TN	4%	13%
Little Rock, AR	4%	13%
Los Angeles, CA	-4%	4%
Memphis, TN	6%	15%
Minneapolis, MN	12%	22%
Oklahoma City, OK	12%	22%
Omaha, NE	19%	29%
Phoenix, AZ	-2%	7%
Portland, OR	0%	8%
San Diego, CA	0%	8%
Seattle, WA	2%	10%
Shreveport, LA	4%	13%
St Louis, MO	8%	17%

Table 4. Net Wind Load Changes at Selected Hurricane Prone Locations due to Changes in ASCE 7-16 Design Wind Speed Map and Roof Uplift Pressure Coefficients

Location	Net Changes in Tile Uplift Loads		Net Changes in Zone 3 Roof Pressures	
	Exposures B & C	Exposure D	Exposures B & C	Exposure D
Bar Harbor, ME	-1%	14%	7%	24%
Boston, MA	-2%	14%	6%	24%
Hyannis, MA	-2%	13%	6%	23%
New Port, RI	-5%	10%	3%	19%
Southampton, NY	-10%	4%	-3%	13%
Atlantic City, NJ	-8%	7%	0%	16%
Virginia Beach, VA	-9%	5%	-2%	14%
Kill Devil Hills, NC	-6%	9%	2%	18%

Beaufort, NC	-9%	6%	-1%	15%
Wrightsville Beach, NC	-7%	7%	0%	16%
Folly Beach, SC	-1%	15%	7%	24%
Charleston, SC	-3%	12%	5%	22%
Hilton Head, SC	-8%	6%	-1%	15%
Savanna, GA	-11%	4%	-3%	12%
Atlantic Beach, FL	-10%	4%	-3%	13%
Jacksonville, FL	-9%	5%	-2%	14%
Daytona Beach, FL	-5%	11%	3%	20%
Melbourne, FL	7%	24%	16%	34%
West Palm Beach, FL	7%	24%	16%	34%
Miami Beach, FL	3%	19%	11%	29%
Miami, FL	3%	19%	11%	29%
Key West, FL	10%	28%	20%	39%
Naples, FL	8%	25%	17%	35%
Sarasota, FL	5%	22%	14%	32%
Longboat Key, FL	2%	18%	11%	28%
Tampa, FL	7%	25%	16%	35%
St. Petersburg, FL	-2%	14%	7%	24%
Panama City, FL	-20%	-7%	-13%	1%
Pensacola, FL	-12%	2%	-5%	11%
Gulf Shores, AL	-7%	8%	1%	17%
Mobile, AL	5%	22%	14%	32%
Biloxi, MS	3%	20%	12%	30%
New Orleans, LA	-4%	12%	4%	21%
Lake Charles, LA	11%	29%	20%	40%
Galveston, TX	1%	17%	9%	26%
Port Aransas, TX	-4%	11%	4%	21%

Cost impact. The cost impact associated with this change will vary depending on the site location across the country. Many areas of the country will see a decrease in the design requirements for the Main Wind Force resisting system resulting in a cost decrease. However, most areas of the country will see an increase in the roofing uplift design pressures, thus marginally increasing the cost of the roof construction.

Component and cladding loads for roofs on buildings with mean roof heights less than or equal to 60 feet are higher for some roof slopes and zones than similar roof slopes and zones in Table R301.2(2) in the 2015 IRC. Construction costs will increase primarily for tile and metal roof installations in exposure D along the hurricane

coastline (homes within 600 feet of the hurricane coastline). Roof sheathing nailing patterns may be tightened in some areas and decking may need to be slightly thicker in some areas along the hurricane coastline. Changes in pressure zones for flat roofs may result in roof support members that are deeper or have greater bending capacity for some spans. Analysis of these effects using solid 2x members indicated that the net effect might be an increase in member depth by a nominal 2 inches to be able to span the same distance using ASCE 7-5 provisions. For example, if a 2x10 would have been sufficient for a 20 ft span using ASCE 7-05 loads a 2x12 might be needed using ASCE 7-16 loads.

RB20-16

RB22-16

IRC: R301.2.2, R301.2.2.1, R301.2.2.1.1, R301.2.2.1.2, R301.2.2.2.

Proposed Change as Submitted

Proponent : James Bela, representing Oregon Earthquakie Awareness (sasquake@gmail.com)

2015 International Residential Code

Revise as follows:

R301.2.2 Seismic provisions. The seismic provisions of this code shall apply as follows:

~~1. *Townhouses* in Seismic Design Categories C, D_0, D_1 and D_2.~~

~~2. Detached one- and two-family *dwellings* in Seismic Design Categories, D_0, D_1 and D_2.~~

1. *Townhouses* with a lateral design strength coefficient of .15 and greater.
2. Detached one- and two-family *dwellings* with a lateral design strength coefficient of .20 and greater.

R301.2.2.1 Determination of ~~seismic~~ lateral design ~~category~~ strength coefficient. Buildings shall be assigned a ~~seismic~~ lateral design ~~category~~ strength coefficient in accordance with Figure R301.2(2).

Delete without substitution:

~~**R301.2.2.1.1 Alternate determination of seismic design category.** The seismic design categories and corresponding short-period design spectral response accelerations, S_{DS} shown in Figure R301.2(2) are based on soil Site Class D, as defined in Section 1613.3.2 of the *International Building Code*. If soil conditions are other than Site Class D, the shortperiod design spectral response accelerations, S_{DS}, for a site can be determined in accordance with Section 1613.3 of the International Building Code. The value of S_{DS} determined in accordance with Section 1613.3 of the International Building Code is permitted to be used to set the seismic design category in accordance with Table R301.2.2.1.1, and to interpolate between values in Tables R602.10.3(3), R603.9.2(1) and other seismic design requirements of this code.~~

TABLE R301.2.2.1.1
SEISMIC DESIGN CATEGORY DETERMINATION

CALCULATED S_{DS}	SEISMIC DESIGN CATEGORY
$S_{DS} \leq 0.17g$	A
$0.17g\ S_{DS} \leq 0.33g$	B
$0.33g\ S_{DS} \leq 0.50g$	C
$0.50g\ S_{DS} \leq 0.67g$	D_0
$0.67g\ S_{DS} \leq 0.83g$	D_1
$0.83g\ S_{DS} \leq 1.25g$	D_2
$1.25g\ S_{DS}$	E

R301.2.2.1.2 Alternative determination of Seismic Design Category E. Buildings located in Seismic Design Category E in accordance with Figure R301.2(2) are permitted to be reclassified as being in Seismic Design Category D_2 provided that one of the following is done:

1. A more detailed evaluation of the seismic design category is made in accordance with the provisions and maps of the *International Building Code*. Buildings located in Seismic Design Category E in accordance with Table R301.2.2.1.1, but located in Seismic Design Category D in accordance with the *International Building Code*, shall be permitted to be designed using the Seismic Design Category D_2 requirements of this code.
2. Buildings located in Seismic Design Category E that conform to the following additional restrictions are permitted to be constructed in accordance with the provisions for Seismic Design Category D_2 of this code:
   - 2.1. All exterior shear wall lines or *braced wall panels* are in one plane vertically from the foundation to the uppermost *story*.
   - 2.2. Floors shall not cantilever past the *exterior walls*.
   - 2.3. The building is within the requirements of Section R301.2.2.2.5 for being considered as regular.

R301.2.2.2 Seismic Design Category C. Structures ~~assigned to Seismic Design Category C~~ located where the lateral designstrength coefficient is .15 shall conform to the requirements of this section.

Reason: Wood frame dwellings have always consistently performed safely (even if not well) in earthquakes for one simple reason:

"they are almost always built by carpenters who never talk to engineers."

The residential seismic provisions are beyond the comprehension and understanding of even, I'm sure, the people and committees who created them. It makes much more sense to tie the earthquake provisions to the potential magnitudes of the earthquakes that can (and will) occur.

SDCs do not realistically reflect the Magnitudes of earthquakes that may impact said "Detached one- and two-family dwellings," nor their associated real intensities of shaking (accelerations and velocities, including pga and pgv); (2) the contour seismic hazard-model maps, upon which the assigned SDCs are determined, are (a) numerical creations without physical reality; (b) mathematically flawed and incorrect (because a dimensionless number, the probability in one year, is arbitrarily assigned dimensional terms of "per yr." or annual frequency – leading to the improperly applied notion of a so-called earthquake "return period" as the basis on assigning earthquake design loads; and (c) non-stable between iterative cycles of creations (sometimes varying 25-30% between issues; and (d) SS or Spectral Response Acceleration is both confusing, misunderstood, and most certainly incorrectly interpreted or understood by all of the vast entities (state decision makers, code officials, design professionals, contractors and probably even the preponderance of ICC Committee members as well as Hearings attendees!

For example, see TAKE ME HOME SEISMIC LOADS

Cost Impact: Will increase the cost of construction
Perhaps . . . Will not increase the cost of construction

This proposal may or may not affect the cost of construction. This is (1) because detached one- and two-family dwellings must be already built to withstand the lateral forces due to wind; and (2) must include basements, "safe rooms"), or other afforded protections to protect occupants against the deadly impacts of hurricanes and tornadoes.

The point is; Detached one- and two-family need to consider the maximum Magnitude of realistric scenario earthquakes that they could, in fact, experience.
And not be constructed vulnerable to earthquakes, because a flawed numerical hazard model "guesses" incorrectly as to the likelihood or possibility of earthquakes. This should remain a rational and a scientific decision based upon protecting both public safety and property. A second point is that "cost" due to structural elements is almost always less than 80% of the cost of a building!

"In general, better seismic performance is achieved through increased lateral design forces (i.e., base shear), and detailing requirements that improve structural connection strength or structural member behavior in the inelastic range of response. Requirements for seismic bracing and anchorage of nonstructural components reduce potential for nonstructural damage and loss of building (or system) functionality."*

* viii, Executive Summary, NIST GCR 14-917-26
Cost Analyses and Benefit Studies for Earthquake-Resistant Construction in Memphis, Tennessee, 2013, 249 p.
NEHRP Consultants Joint Venture A partnership of the Applied Technology Council and the Consortium of Universities for Research in Earthquake Engineering.

In general, where costs might be increased, cost premiums above requirements for wind tend to fall within a range of +1-3%. For cases where seismic requirements would be now additional to what previous codes either applied/neglected/failed to enforce, estimates probably would fall within the range of 0.25 - 1%.

RB22-16 : R301.2.2-BELA13520

Public Hearing Results

Committee Action: **Disapproved**

Committee Reason: There is no real substantiation for the statements in the proponent's reason. It is not clear what the proposal is intended to do. The reason statement indicates that some items should be deleted, but they are not deleted in the proposal. There are a number of other requirements in the code that point to seismic design categories and it is unclear what they should refer to if this proposal were approved.

Assembly Motion: **As Submitted**
Online Vote Results: **Failed**
Support: 10.92% (26) Oppose: 89.08% (212)
Assembly Action: **None**

Proponent : James Bela, representing Oregon Earthquakie Awareness (sasquake@gmail.com) requests Approve as Submitted.

Commenter's Reason: per RB22-16 and S118-16. Problems with present approach utilizing seismic design categories, which yo-yo up-and-down, have been discussed; and the systemic flaws in the underlying design values maps have also been well documented.

"Chances are 50/50 that it's a total crapshoot, but it could go either way."

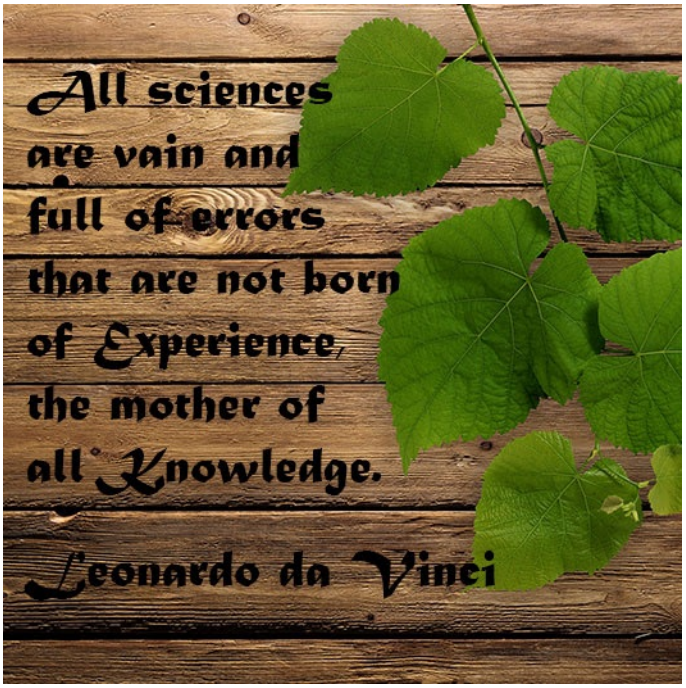

Bibliography: per RB 22-16 and S118-16

RB22-16

RB25-16
IRC: R301.5.

Proposed Change as Submitted

Proponent : Richard Davidson, representing Self

2015 International Residential Code

TABLE R301.5
MINIMUM UNIFORMLY DISTRIBUTED LIVE LOADS (in pounds per square foot)

USE	LIVE LOAD
Uninhabitable attics without storage[b]	10
Uninhabitable attics with limited storage[b,g]	20
Habitable attics and attics served with fixed stairs	30
Balconies (exterior) and decks[e]	40
Fire escapes	40
Guards and handrails[d]	200[h]
Guard in-fill components[f]	50[h]
Passenger vehicle garages[a]	50[a]
Rooms other than sleeping rooms	40
Sleeping rooms	30
Stairs	40[c]

For SI: 1 pound per square foot = 0.0479 kPa, 1 square inch = 645 mm^2 ,1 pound = 4.45 N.

a. Elevated garage floors shall be capable of supporting a 2,000-pound load applied over a 20-square-inch area.

b. Uninhabitable *attics* without storage are those where the clear height between joists and rafters is not more than 42 inches, or where there are not two or more adjacent trusses with web configurations capable of accommodating an assumed rectangle 42 inches in height by 24 inches in width, or greater, within the plane of the trusses. This live load need not be assumed to act concurrently with any other live load requirements.

c. Individual stair treads shall be designed for the uniformly distributed live load or a 300-pound concentrated load acting over an area of 4 square inches, whichever produces the greater stresses.

d. A single concentrated load applied in any direction at any point along the top. <u>For guards exceeding a height of 36 inches above the floor or walking surface the load applied at the top shall be equivalent to 200 pounds at a height of 36 inches.</u>

e. See Section R507.1 for decks attached to *exterior walls* .

f. *Guard* in-fill components (all those except the handrail), balusters and panel fillers shall be designed to withstand a horizontally applied normal load of 50 pounds on an area equal to 1 square foot. This load need not be assumed to act concurrently with any other live load requirement.

g. Uninhabitable *attics* with limited storage are those where the clear height between joists and rafters is not greater than 42 inches, or where there are two or more adjacent trusses with web configurations capable of accommodating an assumed rectangle 42 inches in height by 24 inches in width, or greater, within the plane of the trusses. The live load need only be applied to those portions of the joists or truss bottom chords where all of the following conditions are met:

1. The *attic* area is accessible from an opening not less than 20 inches in width by 30 inches in length that is located where the clear height in the *attic* is not less than 30 inches.

2. The slopes of the joists or truss bottom chords are not greater than 2 inches vertical to 12 units horizontal.

3. Required insulation depth is less than the joist or truss bottom chord member depth.

The remaining portions of the joists or truss bottom chords shall be designed for a uniformly distributed concurrent live load of not less than 10 pounds per square foot.

h. Glazing used in handrail assemblies and *guards* shall be designed with a safety factor of 4. The safety factor shall be applied to each of the concentrated loads applied to the top of the rail, and to the load on the in-fill components. These loads shall be determined independent of one another, and loads are assumed not to occur with any other live load.

Reason: The current rule requires the load on a guard be applied at the top of the guard. This is reasonable assuming the guard is 36 inches high. But what if one wishes to have a taller guard? If the 200 pound force is applied to the top of this taller guard, the reaction on the connections is multiplied in direct relation to the increased height of the guard. If one assumes that the height of the guard has some relationship to the center of gravity of a human being, the load being applied at the top of a 36 inch high guard makes sense. But as the height of the guard increases, the center of gravity of a human being does not. Supposing the guard is six feet in height. Is it possible for a human being contacting the guard to exert a 200 pound force at the top? Obviously it is not. But the guard must be designed for the load being applied at the six foot height. That is unreasonable. What is reasonable is that when constructing a guard the load should be applied at the 36 inch height regardless of the height of the guard. That is what this proposal does. A person should not be penalized for exceeding the code which is what happens in this situation. A taller guard is safer. The force exerted by a person does not change.

Cost Impact: Will not increase the cost of construction
This clarification should reduce construction costs due to the location where loads are applied to guards.

RB25-16 : TABLE R301.5-DAVIDSON10797

Public Hearing Results

Committee Action: **Approved as Modified**

Modification:

TABLE R301.5
MINIMUM UNIFORMLY DISTRIBUTED LIVE LOADS (in pounds per square foot)

d. A single concentrated load applied in any direction at any point along the top. For guards exceeding a height of 36 inces above the floor or walking surface the load applied at the top shall be equivalent to 200 pounds at a height of 36 inches.

(Body of table and footnotes not shown to remain unchanged)

Committee Reason: The modification clarifies the intent. Measuring at the top is more accurate. If you have a 42-inch handrail you can't test at 36-inches.

Assembly Action: **None**

Individual Consideration Agenda

Proponent : Homer Maiel, PE, representing ICC Tri-Chapter (Peninsula, East Bay, Monterey Bay requests Disapprove.

Commenter's Reason: This new proposal would cause some guards to be under designed. Guards are anywhere from 36" to 44", typically. The proponenets statement that some guards could be at 6 feet high is not valid. Who has seen a guard at 6 feet high? A 36-inch guard will have to be designed for a 7200 inch-lb moment at the base. A 44-inch guard will have to be designed for a moment of 8800 inch-lb moment at the base. With this new proposal, if approved, the 44-inch guard will have to be designed for 7200 in.-lb moment rather than 8800 in-lb moment.

RB25-16

RB26-16
IRC: R301.5.

Proposed Change as Submitted

Proponent : Jonathan Siu, City of Seattle Department of Construction & Inspections, representing City of Seattle Department of Construction & Inspections (jon.siu@seattle.gov)

2015 International Residential Code

TABLE R301.5
MINIMUM UNIFORMLY DISTRIBUTED LIVE LOADS (in pounds per square foot)

USE	LIVE LOAD
Uninhabitable attics without storage[b]	10
Uninhabitable attics with limited storage[b,g]	20
Habitable attics and attics served with fixed stairs	30
Balconies (exterior) and decks[e]	~~40~~1.5 times the live load for the area served.
Fire escapes	40
Guards and handrails[d]	200[h]
Guard in-fill components[f]	50[h]
Passenger vehicle garages[a]	50[a]
Rooms other than sleeping rooms	40
Sleeping rooms	30
Stairs	40[c]

For SI: 1 pound per square foot = 0.0479 kPa, 1 square inch = 645 mm^2,1 pound = 4.45 N.
a. Elevated garage floors shall be capable of supporting a 2,000-pound load applied over a 20-square-inch area.
b. Uninhabitable *attics* without storage are those where the clear height between joists and rafters is not more than 42 inches, or where there are not two or more adjacent trusses with web configurations capable of accommodating an assumed rectangle 42 inches in height by 24 inches in width, or greater, within the plane of the trusses. This live load need not be assumed to act concurrently with any other live load requirements.
c. Individual stair treads shall be designed for the uniformly distributed live load or a 300-pound concentrated load acting over an area of 4 square inches, whichever produces the greater stresses.
d. A single concentrated load applied in any direction at any point along the top.
e. See Section R507.1 for decks attached to *exterior walls*.
f. *Guard* in-fill components (all those except the handrail), balusters and panel fillers shall be designed to withstand a horizontally applied normal load of 50 pounds on an area equal to 1 square foot. This load need not be assumed to act concurrently with any other live load requirement.
g. Uninhabitable *attics* with limited storage are those where the clear height between joists and rafters is not greater than 42 inches, or where there are two or more adjacent trusses with web configurations capable of accommodating an assumed rectangle 42 inches in height by 24 inches in width, or greater, within the plane of the trusses. The live load need only be applied to those portions of the joists or truss bottom chords where all of the following conditions are met:
1. The *attic* area is accessible from an opening not less than 20 inches in width by 30 inches in length that is located where the clear height in the *attic* is not less than 30 inches.
2. The slopes of the joists or truss bottom chords are not greater than 2 inches vertical to 12 units horizontal.
3. Required insulation depth is less than the joist or truss bottom chord member depth.
The remaining portions of the joists or truss bottom chords shall be designed for a uniformly distributed concurrent live load of not less than 10 pounds per square foot.
h. Glazing used in handrail assemblies and *guards* shall be designed with a safety factor of 4. The safety factor shall be applied to each of the concentrated loads applied to the top of the rail, and to the load on the in-fill components. These loads shall be determined independent of one another, and loads are assumed not to occur with any other live load.

Reason: This proposal aligns the deck and balcony live loads in the IRC with ASCE 7 (both 2010 and 2016 versions).

Prior to the 2009 IRC, balconies and decks were on different lines in the live load table, with different live load requirements. Balconies were designed for 60 psf, and decks for 40 psf. In the 2009 IRC, through code change proposal S9-06/07, the lines were combined on the basis that they should be designed to the same load. A parallel proposal made a similar change to the IBC live load table. At the end of the process, the deck load (as opposed to the balcony load) was somewhat arbitrarily carried forward by the ICC membership in both the IBC and the IRC.

During the development process for ASCE 7-10, the parallel IBC code change was submitted to ASCE for consideration, as they are the experts in determining what the live load should be. Many comments from ASCE 7 committee members and other public commenters questioned whether designing to normal floor live loads (40 psf) was adequate, given the history of failures leading to deaths and injuries. ASCE determined through their deliberative process that the live load on these structures should be 1.5 times the live load for the area the deck or balcony serves. This more or less corresponds to the 60 psf required in the 2006 and earlier IRCs for balconies.

This proposal keeps the IRC in line with ASCE 7, which is the venue where these issues are more thoroughly vetted by experts in the subject than is able to be done through the ICC code development process.

Cost Impact: Will increase the cost of construction
The increase in loading is likely to result in a requirement for larger or more closely spaced supporting structure.

RB26-16 : TABLE R301.5-SIU11096

Public Hearing Results

Committee Action: **Disapproved**

Committee Reason: The proponents have not identified a problem related to deck loads. The proposal is incomplete. The proposed language conflicts with the deck requirements of Section R703.

Assembly Action: **None**

Individual Consideration Agenda

Proponent : Scott Campbell, representing Portland Cement Association (scampbell@cement.org) requests Approve as Submitted.

Commenter's Reason: The proposed change is meant to bring the IRC in line with ASCE 7-16 regarding balcony loads. The proposal also brings the live load on balconies back in line with previous versions of the code. The live load on balconies was arbitrarily reduced during a previous code cycle, and the ASCE 7 committee on live loads debated the changes with a view towards incorporating them into the ASCE standard. However, it was the consensus of the committee that the live loads should be increased based on previous experience, professional judgement, and the documented failures of balconies. The proposal should be approved as submitted to ensure that the IRC reflects the properly technically vetted live load criteria developed in the ANSI accredited ASCE standards development process.

Proponent : Ali Fattah, City of San Diego Development Services Department, representing City of San Diego Development Services Department (afattah@sandiego.gov) requests Approve as Submitted.

Commenter's Reason: It is important that the IRC and IBC/ASCE 7 be coordinated. While loads are necessary for utilizing the span tables in the IRC, the loads are also used by a structural engineer for designing joists, beams and foundations should be same. Not coordinating the codes will result in confusion since an applicant will rightly argue that if the work is regulated under the IRC that the IRC loads should be applied. The proposed code change does not conflict with R703 EXTERIOR COVERING.

RB26-16

RB27-16
IRC: R301.5.

Proposed Change as Submitted

Proponent : Lee Kranz, City of Bellevue, WA , representing Washington Association of Building Officials Technical Code Development Committee (lkranz@bellevuewa.gov); Jonathan Siu (Jon.Siu@seattle.gov)

2015 International Residential Code

Revise as follows:

TABLE R301.5
MINIMUM UNIFORMLY DISTRIBUTED LIVE LOADS (in pounds per square foot)

USE	LIVE LOAD
Uninhabitable attics without storage[b]	10
Uninhabitable attics with limited storage[b,g]	20
Habitable attics and attics served with fixed stairs	30
Balconies (exterior) and decks[e]	~~40~~ 60
Fire escapes	40
Guards and handrails[d]	200[h]
Guard in-fill components[f]	50[h]
Passenger vehicle garages[a]	50[a]
Rooms other than sleeping rooms	40
Sleeping rooms	30
Stairs	40[c]

For SI: 1 pound per square foot = 0.0479 kPa, 1 square inch = 645 mm^2,1 pound = 4.45 N.
a. Elevated garage floors shall be capable of supporting a 2,000-pound load applied over a 20-square-inch area.
b. Uninhabitable *attics* without storage are those where the clear height between joists and rafters is not more than 42 inches, or where there are not two or more adjacent trusses with web configurations capable of accommodating an assumed rectangle 42 inches in height by 24 inches in width, or greater, within the plane of the trusses. This live load need not be assumed to act concurrently with any other live load requirements.
c. Individual stair treads shall be designed for the uniformly distributed live load or a 300-pound concentrated load acting over an area of 4 square inches, whichever produces the greater stresses.
d. A single concentrated load applied in any direction at any point along the top.
e. See Section R507.1 for decks attached to *exterior walls*.
f. *Guard* in-fill components (all those except the handrail), balusters and panel fillers shall be designed to withstand a horizontally applied normal load of 50 pounds on an area equal to 1 square foot. This load need not be assumed to act concurrently with any other live load requirement.
g. Uninhabitable *attics* with limited storage are those where the clear height between joists and rafters is not greater than 42 inches, or where there are two or more adjacent trusses with web configurations capable of accommodating an assumed rectangle 42 inches in height by 24 inches in width, or greater, within the plane of the trusses. The live load need only be applied to those portions of the joists or truss bottom chords where all of the following conditions are met:
1. The *attic* area is accessible from an opening not less than 20 inches in width by 30 inches in length that is located where the clear height in the *attic* is not less than 30 inches.
2. The slopes of the joists or truss bottom chords are not greater than 2 inches vertical to 12 units horizontal.
3. Required insulation depth is less than the joist or truss bottom chord member depth.
The remaining portions of the joists or truss bottom chords shall be designed for a uniformly distributed concurrent live load of not less than 10 pounds per square foot.
h. Glazing used in handrail assemblies and *guards* shall be designed with a safety factor of 4. The safety factor shall be applied to each of the concentrated loads applied to the top of the rail, and to the load on the in-fill components. These loads shall be determined independent of one another, and loads are assumed not to occur with any other live load.

Reason: This proposal more closely aligns the IRC live load for decks and balconies with the corresponding table in ASCE 7-10 and ASCE 7-16.

The 2006 and earlier IRCs required decks to be designed for 40 psf live load, and balconies for 60 psf. The 2009 and later IRCs require both decks and balconies to be designed to 40 psf. This change and a similar change in the IBC were made through code change proposal S9-06/07, in which the argument was made that decks and balconies should be designed to the same live load. The ICC membership ultimately decided to carry the deck load forward (40 psf) rather than the balcony load.

The IBC code change was submitted to ASCE in the ASCE 7-10 development cycle, because they are the experts at determining live loads. Through their process, ASCE determined decks and balconies should be designed to 1.5 times the live load of the area they serve.

In order to simplify the requirement, we are proposing to use a straight 60 psf for deck and balcony live load design. This corresponds to 1.5 times the live load for rooms other than sleeping rooms, and coincidentally, returns the design loads for balconies to what they were prior to the 2009 IRC.

Cost Impact: Will increase the cost of construction
The increase in live load is likely to result in more structure being required to support it.

RB27-16 : TABLE R301.5-KRANZ11255

Public Hearing Results

Committee Action: **Disapproved**

Committee Reason: The committee disapproved this proposal to be consistent with prior action on RB26-16. It would be best to go with a simplified method. The proponents might consider making the load the same as the adjacent area. Often deck failures are due to weathering, not design.

Assembly Action: **None**

Individual Consideration Agenda

Public Comment 1:

Proponent : Jonathan Siu, representing City of Seattle Department of Construction and Inspections (Jon.Siu@seattle.gov); Lee Kranz, City of Bellevue, Washington, representing Washington Association of Building Officials (lkranz@bellevuewa.gov) requests Approve as Modified by this Public Comment.

Modify as Follows:

2015 International Residential Code

TABLE R507.2
DECK LEDGER CONNECTION TO BAND JOIST[a, b] (Deck live load = ~~40~~ 60 psf, deck dead load = 10 psf, snow load ≤ ~~40~~ 60 psf)

CONNECTION DETAILS	JOIST SPAN						
	6′ and less	6′1″ to 8′	8′1² to 10′	10′1″ to 12′	12′1″ to 14′	14′1″ to 16′	16′1″ to 18′
	On-center spacing of fasteners						
$^1/_2$ -inch diameter lag screw with $^1/_2$ -inch maximum sheathing[c, d]	~~30~~22	~~23~~ 16	~~18~~ 13	~~15~~ 11	~~13~~9	~~11~~8	~~10~~7
$^1/_2$ -inch diameter bolt with $^1/_2$ -inch maximum sheathing[d]	~~36~~30	~~36~~22	~~34~~18	~~29~~15	~~24~~13	~~21~~11	~~19~~10
$^1/_2$ -inch diameter bolt with 1-inch maximum sheathing[e]	~~36~~ 26	~~36~~ 19	~~29~~ 16	~~24~~ 13	~~21~~ 11	~~18~~ 10	~~16~~ 9

For SI: 1 inch = 25.4 mm, 1 foot = 304.8 mm, 1 pound per square foot = 0.0479 kPa.
a. Ledgers shall be flashed in accordance with Section R703.4 to prevent water from contacting the house band joist.
b. Snow load shall not be assumed to act concurrently with live load.
c. The tip of the lag screw shall fully extend beyond the inside face of the band joist.
d. Sheathing shall be wood structural panel or solid sawn lumber.
e. Sheathing shall be permitted to be wood structural panel, gypsum board, fiberboard, lumber or foam sheathing. Up to $^1/_2$ -inch thickness of stacked washers shall be permitted to substitute for up to $^1/_2$ inch of allowable sheathing thickness where combined with wood structural panel or lumber sheathing.

TABLE R507.5
DECK JOIST SPANS FOR COMMON LUMBER SPECIES[f] (ft. - in.)

SPECIES[a]	SIZE	SPACING OF DECK JOISTS WITH NO CANTILEVER[b] (inches)	SPACING OF DECK JOISTS WITH CANTILEVERS[c] (inches)

		12	16	24	12	16	24
Southern pine	2 × 6	~~9-11~~8-6	~~9-0~~7-9	~~7-7~~6-9	~~6-8~~7-7	~~6-8~~6-10	~~6-8~~6-0
	2 × 8	~~13-1~~11-2	~~11-10~~10-2	~~9-8~~8-11	~~10-1~~9-10	~~10-1~~8-11	~~9-8~~7-9
	2 × 10	~~16-2~~14-4	~~14-0~~13-0	~~11-5~~10-11	~~14-6~~15-5	~~14-0~~ 13-4	~~11-5~~10-11
	2 × 12	~~18-0~~17-5	~~16-6~~15-5	~~13-6~~12-7	~~18-0~~17-11	~~16-6~~15-6	~~13-6~~12-8
Douglas fir-larch[d], hem-fir[d] spruce-pine-fir[d]	2 × 6	~~9-6~~8-1	~~8-8~~7-0	~~7-2~~5-9	~~6-3~~7-5	~~6-3~~6-9	~~6-3~~5-9
	2 × 8	~~12-6~~10-10	~~11-1~~9-5	~~9-1~~7-8	~~9-5~~9-7	~~9-5~~ 8-8	~~9-1~~7-7
	2 × 10	~~15-8~~13-3	~~13-7~~11-6	~~11-1~~9-4	~~13-7~~13-3	~~13-7~~11-6	~~11-1~~9-5
	2 × 12	~~18-0~~15-4	~~15-9~~13-4	~~12-10~~10-10	~~18-0~~15-5	~~15-9~~13-4	~~12-10~~10-11
Redwood, western cedars, ponderosa pine[e], red pine[e]	2 × 6	~~8-10~~7-6	~~8-0~~ 6-9	~~7-0~~5-6	~~5-7~~6-10	~~5-7~~6-2	~~5-7~~5-4
	2 × 8	~~11-8~~9-10	~~10-7~~8-6	~~8-8~~ 6-11	~~8-6~~ 8-10	~~8-6~~ 8-0	~~8-6~~6-11
	2 × 10	~~14-11~~12-0	~~13-0~~10-5	~~10-7~~8-6	~~12-3~~12-1	~~12-3~~10-6	~~10-7~~8-7
	2 × 12	~~17-5~~13-11	~~15-1~~12-1	~~12-4~~9-10	~~16-5~~14-0	~~15-1~~12-2	~~12-4~~9-11

For SI: 1 inch = 25.4 mm, 1 foot = 304.8 mm, 1 pound per square foot = 0.0479 kPa, 1 pound = 0.454 kg.

a. No. 2 grade with wet service factor.

b. Ground snow load, live load = ~~40~~ 60 psf, dead load = 10 psf, L/Δ = 360.

c. Ground snow load, live load = ~~40~~ 60 psf, dead load = 10 psf, L/Δ = 360 at main span, L/Δ = 180 at cantilever with a 220-pound point load applied to end.

d. Includes incising factor.

e. Northern species with no incising factor

f. Cantilevered spans not exceeding the nominal depth of the joist are permitted.

–

TABLE R507.6
DECK BEAM SPAN LENGTHS[a, b] (ft. - in.)

SPECIES[c]	SIZE[d]	DECK JOIST SPAN LESS THAN OR EQUAL TO: (feet)						
		6	8	10	12	14	16	18
Southern pine	2 – 2 × 6	~~6-11~~6-4	~~5-11~~6-0	~~5-4~~5-6	~~4-10~~4-7	~~4-6~~3-11	~~4-3~~3-5	~~4-0~~3-0
	2 – 2 × 8	~~8-9~~8-11	~~7-7~~8-5	~~6-9~~7-2	~~6-2~~6-0	~~5-9~~5-2	~~5-4~~4-6	~~5-0~~4-0
	2 – 2 × 10	~~10-4~~11-11	~~9-0~~10-9	~~8-0~~9-2	~~7-4~~7-8	~~6-9~~6-7	~~6-4~~5-9	~~6-0~~5-1
	2 – 2 × 12	~~12-2~~14-5	~~10-7~~12-7	~~9-5~~11-2	~~8-7~~9-4	~~8-0~~8-0	~~7-6~~7-0	~~7-0~~6-3
	3 – 2 × 6	~~8-2~~8-1	~~7-5~~7-8	~~6-8~~7-3	~~6-1~~6-10	~~5-8~~5-10	~~5-3~~5-1	~~5-0~~4-7
	3 – 2 × 8	~~10-10~~11-3	~~9-6~~ 10-4	~~8-6~~9-5	~~7-9~~8-10	~~7-2~~7-9	~~6-8~~6-9	~~6-4~~6-0
	3 – 2 × 10	~~13-0~~14-5	~~11-3~~12-10	~~10-0~~11-10	~~9-2~~10-10	~~8-6~~9-10	~~7-11~~8-7	~~7-6~~7-8
	3 – 2 × 12	~~15-3~~17-3	~~13-3~~15-4	~~11-10~~13-10	~~10-9~~12-7	~~10-0~~11-7	~~9-4~~10-6	~~8-10~~9-4
Douglas fir-larch[e], hem-fir[e], spruce-	3 × 6 or 2 – 2 x 6	~~5-5~~5-5	~~4-8~~4-5	~~4-2~~3-6	~~3-10~~2-11	~~3-6~~2-6	~~3-1~~2-2	~~2-9~~1-11
	3 × 8 or 2 – 2 × 8	~~6-10~~7-3	~~5-11~~5-9	~~5-4~~4-8	~~4-10~~3-10	~~4-6~~3-4	~~4-1~~2-11	~~3-8~~2-7
	3 × 10 or 2 – 2 × 10	~~8-4~~8-11	~~7-3~~7-5	~~6-6~~5-11	~~5-11~~4-11	~~5-6~~4-3	~~5-1~~3-8	~~4-8~~3-3
	3 × 12 or 2 – 2 × 12	~~9-8~~10-4	~~8-5~~8-11	~~7-6~~7-2	~~6-10~~6-0	~~6-4~~5-2	~~5-11~~4-6	~~5-7~~4-0
	4 × 6	~~6-5~~6-3	~~5-6~~5-11	~~4-11~~4-11	~~4-6~~4-1	~~4-2~~3-6	~~3-11~~3-1	~~3-8~~2-9

hem-fir[e], spruce-pine-fir[e], redwood, western cedars[f], ponderosa pine[f], red pinef	4 × 8	~~8-5~~ 8-9	~~7-3~~7-9	~~6-6~~6-6	~~5-11~~5-5	~~5-6~~4-8	~~5-2~~4-1	~~4-10~~3-7
	4 × 10	~~9-11~~11-0	~~8-7~~9-6	~~7-8~~8-3	~~7-0~~6-11	~~6-6~~5-11	~~6-1~~5-2	~~5-8~~4-7
	4 × 12	~~11-5~~12-10	~~9-11~~11-1	~~8-10~~10-0	~~8-1~~8-5	~~7-6~~7-2	~~7-0~~6-3	~~6-7~~5-7
	3 – 2 × 6	~~7-4~~ 6-11	~~6-8~~6-6	~~6-0~~6-1	~~5-6~~5-3	~~5-1~~4-6	~~4-9~~3-11	~~4-6~~3-6
	3 – 2 × 8	~~9-8~~9-8	~~8-6~~8-6	~~7-7~~7-8	~~6-11~~6-11	~~6-5~~5-11	~~6-0~~5-3	~~5-8~~4-8
	3 – 2 × 10	~~12-0~~11-11	~~10-5~~10-4	~~9-4~~9-4	~~8-6~~8-5	~~7-10~~7-7	~~7-4~~6-8	~~6-11~~5-11
	3 – 2 × 12	~~13-11~~13-10	~~12-1~~12-0	~~10-9~~10-10	~~9-10~~9-10	~~9-1~~9-1	~~8-6~~8-1	~~8-1~~7-2

For SI: 1 inch = 25.4 mm, 1 foot = 304.8 mm, 1 pound per square foot = 0.0479 kPa, 1 pound = 0.454 kg.

a. Ground snow load, live load = ~~40~~ 60 psf, dead load = 10 psf, L/Δ = 360 at main span, L/Δ = 180 at cantilever with a 220-pound point load applied at the end.

b. Beams supporting deck joists from one side only.

c. No. 2 grade, wet service factor.

d. Beam depth shall be greater than or equal to depth of joists with a flush beam condition.

e. Includes incising factor.

f. Northern species. Incising factor not included.

Commenter's Reason: At the Committee Action Hearings, it was pointed out that the tables in Section 507 needed to be updated to correspond to the required 60 psf live load on decks and balconies. This public comment makes the requisite changes to the tables.

The joist and beam span tables were developed using a spreadsheet, which was based on the provisions in the NDS, where possible The spreadsheet was validated (again, where possible) by using a live load of 40 psf and comparing to the values in the IRC tables. In many cases, the values in the spreadsheet matched the values in the IRC, which validated the method used in the spreadsheet. However, it is to be noted there were also many cases where despite the correctness of the formulas in the spreadsheet, the values could not be matched with the IRC values. It appears there are several cells in the IRC tables that are unnecessarily conservative (based on calculations), or where engineering judgment was used to align or cap the values in the IRC.

Another spreadsheet was developed to determine the bolt spacing for the ledger table. For lag bolts, the values in the spreadsheet were validated by comparing the spacing as calculated with 40 psf live load to the values in the IRC table. For the through-bolts, the bolt capacities used to calculate the spacing were validated by comparing them with the bolt capacities given in an online tool on the American Wood Council website. However, despite having "good" bolt values, we were unable to match the through-bolt spacing shown in the IRC table. In addition, we were unable to determine how the values for the through-bolts with the 1/2" of stacked washers were derived, so the values in this public comment were determined as a ratio of the calculated through-bolt values without the stacked washers. Also of note: the table in the IRC for the ledger connection appears to be incorrectly based on a Douglas Fir band joist and a Douglas Fir deck ledger--only by using the values for DF were the spreadsheet calculations able to match the spacing for the lag bolts, or come close to the values for the through bolts. The code text requires a different combination of wood species, and if those species are used, the resulting bolt capacities are considerably lower(so required spacing would be tighter). We have chosen to maintain the DF/DF combination as the basis of the calculations so as to be consistent with the 2015 IRC tables in methodology, but this is is an issue that should be addressed in the future.

Anyone who would like a to review a copy of the spreadsheets should email the proponents of this public comment, and a copy will be provided.

Proponent : Scott Campbell, representing Portland Cement Association (scampbell@cement.org) requests Approve as Submitted.

Commenter's Reason: The live load on balconies was arbitrarily reduced during a previous code cycle, and the ASCE 7 committee on live loads debated the changes with a view towards incorporating them into the ASCE standard. However, it was the consensus of the committee that the live loads should be increased based on previous experience, professional judgement, and the documented failures of balconies. The proposal should be approved as submitted to ensure that the IRC reflects the properly technically vetted live load criteria developed in the ANSI accredited ASCE standards development process.

RB27-16

RB29-16
IRC: R302.1.

Proposed Change as Submitted

Proponent : Joseph Holland (jholland@frtw.com)

2015 International Residential Code

Revise as follows:

TABLE R302.1 (1)
EXTERIOR WALLS

EXTERIOR WALL ELEMENT		MINIMUM FIRE-RESISTANCE RATING	MINIMUM FIRE SEPARATION DISTANCE
Walls	Fire-resistance rated	1 hour—tested in accordance with ASTM E 119 or UL 263 with exposure from both sides	
	Not fire-resistance rated	0 hours	≥ 5 feet
Projections	Not allowed	N/A	
	Fire-resistance rated	1 hour on the underside, or Type IV construction, or fire-retardant-treated wood.[a, b]	≥ 2 feet to
	Not fire-resistance rated	0 hours	≥ 5 feet
Openings in walls	Not allowed	N/A	
	25% maximum of wall area	0 hours	3 feet
	Unlimited	0 hours	5 feet
Penetrations	All	Comply with Section R302.4	
		None required	3 feet

For SI: 1 foot = 304.8 mm.
N/A = Not Applicable.
a. Roof eave fire-resistance rating shall be permitted to be reduced to 0 hours on the underside of the eave if fireblocking is provided from the wall top plate to the underside of the roof sheathing.
b. Roof eave fire-resistance rating shall be permitted to be reduced to 0 hours on the underside of the eave provided that gable vent openings are not installed.

TABLE R302.1 (2)
EXTERIOR WALLS—DWELLINGS WITH FIRE SPRINKLERS

EXTERIOR WALL ELEMENT		MINIMUM FIRE-RESISTANCE RATING	MINIMUM FIRE SEPARATION DISTANCE
Walls	Fire-resistance rated	1 hour—tested in accordance with ASTM E 119 or UL 263 with exposure from the outside	0 feet
	Not fire-resistance rated	0 hours	3 feet[a]
Projections	Not allowed	N/A	
	Fire-resistance rated	1 hour on the underside, or Type IV construction or fire-retardant-treated wood.[b, c]	2 feet[a]
	Not fire-resistance rated	0 hours	3 feet
Openings in walls	Not allowed	N/A	
	Unlimited	0 hours	3 feet[a]
Penetrations	All	Comply with Section R302.4	
		None required	3 feet[a]

For SI: 1 foot = 304.8 mm.
N/A = Not Applicable

a. For residential subdivisions where all *dwellings* are equipped throughout with an automatic sprinkler system installed in accordance with Section P2904, the *fire separation distance* for nonrated exterior walls and rated projections shall be permitted to be reduced to 0 feet, and unlimited unprotected openings and penetrations shall be permitted, where the adjoining *lot* provides an open setback *yard* that is 6 feet or more in width on the opposite side of the property line.
b. The roof eave fire-resistance rating shall be permitted to be reduced to 0 hours on the underside of the eave if fireblocking is provided from the wall top plate to the underside of the roof sheathing.
c. The roof eave fire-resistance rating shall be permitted to be reduced to 0 hours on the underside of the eave provided that gable vent openings are not installed.

Reason: The proposal will bring the IRC and the IBC into agreement. Currently, the IBC provides options while the IRC has only one method of compliance.
The IBC in Section 705.2.3 permits the use of Type IV construction, *fire-retardant-treated wood* or 1-hr fire-resistance construction for combustible projections. The IRC in Table R302.1(1) and Table R302.1(2) only permits the 1-hr fire-resistance construction on the underside. There is no 1-hr. fire-resistance assembly listed for roof eaves. As a result, users of the International Residential Code are looking to the International Building Code for compliance with the requirement.

Cost Impact: Will not increase the cost of construction
The change only provides options. It does not mandate any requirements not permitted by ICC codes.

RB29-16 : TABLE R302.1-HOLLAND11539

Public Hearing Results

Committee Action: **Approved as Modified**

Modification:

TABLE R302.1 (1)
EXTERIOR WALLS

EXTERIOR WALL ELEMENT		**MINIMUM FIRE-RESISTANCE RATING**	**MINIMUM FIRE SEPARATION DISTANCE**
Walls	Fire-resistance rated	1 hour—tested in accordance with ASTM E 119 or UL 263 with exposure from both sides	
	Not fire-resistance rated	0 hours	≥ 5 feet
Projections	Not allowed	N/A	
	Fire-resistance rated	1 hour on the underside, or ~~Type IV~~ heavy timber ~~construction~~, or fire-retardant-treated wood.[a, b]	≥ 2 feet to
	Not fire-resistance rated	0 hours	≥ 5 feet
Openings in walls	Not allowed	N/A	
	25% maximum of wall area	0 hours	3 feet
	Unlimited	0 hours	5 feet
Penetrations	All	Comply with Section R302.4	
		None required	3 feet

For SI: 1 foot = 304.8 mm.

N/A = Not Applicable.

a. Roof eave fire-resistance rating shall be permitted to be reduced to 0 hours on the underside of the eave if fireblocking is provided from the wall top plate to the underside of the roof sheathing.

b. Roof eave fire-resistance rating shall be permitted to be reduced to 0 hours on the underside of the eave provided that gable vent openings are not installed.

TABLE R302.1 (2)

EXTERIOR WALLS—DWELLINGS WITH FIRE SPRINKLERS

EXTERIOR WALL ELEMENT		MINIMUM FIRE-RESISTANCE RATING	MINIMUM FIRE SEPARATION DISTANCE
Walls	Fire-resistance rated	1 hour—tested in accordance with ASTM E 119 or UL 263 with exposure from the outside	0 feet
	Not fire-resistance rated	0 hours	3 feet[a]
Projections	Not allowed	N/A	
	Fire-resistance rated	1 hour on the underside, or ~~Type IV~~ heavy timber ~~construction~~ or fire-retardant-treated wood.[b, c]	2 feet[a]
	Not fire-resistance rated	0 hours	3 feet
Openings in walls	Not allowed	N/A	
	Unlimited	0 hours	3 feet[a]
Penetrations	All	Comply with Section R302.4	
		None required	3 feet[a]

For SI: 1 foot = 304.8 mm.

N/A = Not Applicable

a. For residential subdivisions where all *dwellings* are equipped throughout with an automatic sprinkler system installed in accordance with Section P2904, the *fire separation distance* for nonrated exterior walls and rated projections shall be permitted to be reduced to 0 feet, and unlimited unprotected openings and penetrations shall be permitted, where the adjoining *lot* provides an open setback *yard* that is 6 feet or more in width on the opposite side of the property line.

b. The roof eave fire-resistance rating shall be permitted to be reduced to 0 hours on the underside of the eave if fireblocking is provided from the wall top plate to the underside of the roof sheathing.

c. The roof eave fire-resistance rating shall be permitted to be reduced to 0 hours on the underside of the eave provided that gable vent openings are not installed.

Committee Reason: The modification deletes a term that is not used in the code and replaces it with one that is used. The proposal offers a good solution for projections.

Assembly Action: **None**

Individual Consideration Agenda

Proponent : Tim Earl, representing GBH International (tearl@gbhinternational.com) requests Disapprove.

Commenter's Reason: This proposal reduces fire safety by allowing a product with much lower fire performance than currently allowed.

Fire-retardant treated wood is not required to pass a fire resistance test. Instead it is tested to an extended ASTM E84 test. This is not nearly as severe. Additionally. this proposal does not specify a minimum thickness for the FRTW, which can include plywood.

RB29-16

RB31-16

IRC: R302.1, R302.2, R302.3, R606.2.2.

Proposed Change as Submitted

Proponent : Stephen Skalko, representing Stephen V. Skalko, PE & Assoctares, LLC (svskalko@cox.net); Matthew Senecal, representing American Concrete Institute (matthew.senecal@concrete.org); Phillip Samblanet, The Masonry Society, representing The Masonry Society (psamblanet@masonrysociety.org); William Hall, Portland Cement Association, representing Portland Cement Association (jhall@cement.org)

2015 International Residential Code

Revise as follows:

TABLE R302.1 (1)
EXTERIOR WALLS

EXTERIOR WALL ELEMENT		MINIMUM FIRE-RESISTANCE RATING	MINIMUM FIRE SEPARATION DISTANCE
Walls	Fire-resistance rated	1 hour—tested in accordance with ASTM E 119 or UL 263 with exposure from both sides[c]	
	Not fire-resistance rated	0 hours	≥ 5 feet
Projections	Not allowed	N/A	
	Fire-resistance rated	1 hour on the underside[a, b]	≥ 2 feet to
	Not fire-resistance rated	0 hours	≥ 5 feet
Openings in walls	Not allowed	N/A	
	25% maximum of wall area	0 hours	3 feet
	Unlimited	0 hours	5 feet
Penetrations	All	Comply with Section R302.4	
		None required	3 feet

For SI: 1 foot = 304.8 mm.

N/A = Not Applicable.

a. Roof eave fire-resistance rating shall be permitted to be reduced to 0 hours on the underside of the eave if fireblocking is provided from the wall top plate to the underside of the roof sheathing.

b. Roof eave fire-resistance rating shall be permitted to be reduced to 0 hours on the underside of the eave provided that gable vent openings are not installed.

c. Determination of fire resistance rating in accordance with ACI/TMS 216.1 shall not be prohibited.

TABLE R302.1 (2)
EXTERIOR WALLS—DWELLINGS WITH FIRE SPRINKLERS

EXTERIOR WALL ELEMENT		MINIMUM FIRE-RESISTANCE RATING	MINIMUM FIRE SEPARATION DISTANCE
Walls	Fire-resistance rated	1 hour—tested in accordance with ASTM E 119 or UL 263 with exposure from the outside[d]	0 feet
	Not fire-resistance rated	0 hours	3 feet[a]
Projections	Not allowed	N/A	
	Fire-resistance rated	1 hour on the underside[b, c]	2 feet[a]
	Not fire-resistance rated	0 hours	3 feet
Openings in walls	Not allowed	N/A	
	Unlimited	0 hours	3 feet[a]
Penetrations	All	Comply with Section R302.4	
		None required	3 feet[a]

For SI: 1 foot = 304.8 mm.

N/A = Not Applicable

a. For residential subdivisions where all *dwellings* are equipped throughout with an automatic sprinkler system installed in accordance with Section P2904, the *fire separation distance* for nonrated exterior walls and rated projections shall be permitted to be reduced to 0 feet, and unlimited unprotected openings and penetrations shall be permitted, where the adjoining *lot* provides an open setback *yard* that is 6 feet or more in width on the opposite side of the property line.

b. The roof eave fire-resistance rating shall be permitted to be reduced to 0 hours on the underside of the eave if fireblocking is provided from the wall top plate to the underside of the roof sheathing.

c. The roof eave fire-resistance rating shall be ~~permitted~~ allowed to be reduced to 0 hours on the underside of the eave provided that gable vent openings are not installed.
d. c. Determination of fire resistance rating in accordance with ACI/TMS 216.1 shall not be prohibited.

R302.2 Townhouses. Common walls separating *townhouses* shall be assigned a fire-resistance rating in accordance with Section R302.2, Item 1 or 2. The common wall shared by two *townhouses* shall be constructed without plumbing or mechanical equipment, ducts or vents in the cavity of the common wall. The wall shall be rated for fire exposure from both sides and shall extend to and be tight against exterior walls and the underside of the roof sheathing. Electrical installations shall be in accordance with Chapters 34 through 43. Penetrations of the membrane of common walls for electrical outlet boxes shall be in accordance with Section R302.4.

1. Where a fire sprinkler system in accordance with Section P2904 is provided, the common wall shall be not less than a 1-hour fire-resistance-rated wall assembly tested in accordance with ASTM E 119 or UL 263 or determined in accordance with ACI/TMS 216.1.
2. Where a fire sprinkler system in accordance with Section P2904 is not provided, the common wall shall be not less than a 2-hour fire-resistance-rated wall assembly tested in accordance with ASTM E 119 or UL 263 or determined in accordance with ACI/TMS 216.1.

R302.3 Two-family dwellings. *Dwelling units* in two-family dwellings shall be separated from each other by wall and floor assemblies having not less than a 1-hour fire-resistance rating where tested in accordance with ASTM E 119 or UL 263 or determined in accordance with ACI/TMS 216.1. Fire-resistance-rated floor/ceiling and wall assemblies shall extend to and be tight against the *exterior wall*, and wall assemblies shall extend from the foundation to the underside of the roof sheathing.

Exceptions:

1. A fire-resistance rating of $^{1}/_{2}$ hour shall be permitted in buildings equipped throughout with an automatic sprinkler system installed in accordance with NFPA 13.
2. Wall assemblies need not extend through *attic* spaces where the ceiling is protected by not less than $^{5}/_{8}$-inch (15.9 mm) Type X gypsum board, an *attic* draft stop constructed as specified in Section R302.12.1 is provided above and along the wall assembly separating the *dwellings* and the structural framing supporting the ceiling is protected by not less than $^{1}/_{2}$-inch (12.7 mm) gypsum board or equivalent.

R606.2.2 Clay or shale masonry units. Clay or shale masonry units shall conform to the following standards: ASTM C 34 for structural clay *load-bearing wall* tile; ASTM C 56 for structural clay nonload-bearing wall tile; ASTM C 62 for building brick (solid masonry units made from clay or shale); ASTM C 1088 for solid units of thin veneer brick; ASTM C 126 for ceramic-glazed structural clay facing tile, facing brick and solid masonry units; ASTM C 212 for structural clay facing tile; ASTM C 216 for facing brick (solid masonry units made from clay or shale); ASTM C652 for hollow brick (hollow masonry units made from clay or shale); or ASTM C1405 for glazed brick (single-fired solid brick units).

Exception: Structural clay tile for nonstructural use in fireproofing of structural members and in wall furring shall not be required to meet the compressive strength specifications. The fire-resistance rating shall be determined in accordance with ASTM E 119 ~~or~~ , UL 263 or determined in accordance with ACI/TMS 216.1 and shall comply with the requirements of Section R302.

Reference standards type: This reference standard is new to the ICC Code Books
Add new standard(s) as follows:

A review of the following standard(s) proposed for inclusion in the code with regard to the ICC criteria for referenced standards (Section 3.6 of CP#28) will be posted on the ICC website on or before April 1, 2016.

ACI	American Concrete Institute 38800 Country Club Drive Farmington Hills, MI 48331

Standard reference number	Title	Referenced in code section number
216.1-14	Code Requirements for Determining Fire Resistance of Concrete and Masonry Construction Assemblies	R302.2, R302.3, R606.2.2

TMS	The Masonry Society 105 South Sunset Street, Suite Q Longmont, CO 80501

Standard reference number	Title	Referenced in code section number
216.1-14	Code Requirements for Determining Fire Resistance of Concrete and Masonry Construction Assemblies	R302.2, R302.3, R606.2.2

Reason: The *International Building Code* (IBC) permits ACI 216.1, *Code Requirements for Determining Fire Resistance of Concrete and Masonry Construction Assemblies* to be used as an alternative to testing in accordance with ASTM E 119 or UL 263 to determine the fire resistance rating of concrete and masonry. This proposal adds ACI 216.1 to the IRC as an additional compliance method and makes the IRC consistent with the IBC.

Cost Impact: Will not increase the cost of construction
Presently the IRC requires wall assemblies to be tested to ASTM E119 or UL 263 when used for fire rated exterior wall elements, fire rated townhouse separations and fire rated dwelling unit separations. This proposal will allow the code user to use the calculation methods permitted by ACI 216.1 to determine the fire resistance for concrete and masonry assemblies as an alternative to having to expend funds to perform lab testing of these assemblies. Thus there will likely be a cost decrease.

Analysis: A review of the standard(s) proposed for inclusion in the code, ACI/TMS 216.1, with regard to the ICC criteria for referenced standards (Section 3.6 of CP#28) will be posted on the ICC website on or before April 1, 2016.

RB31-16 : TABLE R302.2-SKALKO12686

Public Hearing Results

Committee Action: **Disapproved**

Committee Reason: This proposal needs work and contains a double negative.

Assembly Action: **None**

Individual Consideration Agenda

Public Comment 1:

Proponent : Stephen Skalko, representing Masonry Alliance for Codes and Standards (svskalko@cox.net); Matthew Senecal (matthew.senecal@concrete.org); William Hall, Portland Cement Association, representing Portland Cement Association (jhall@cement.org) requests Approve as Modified by this Public Comment.

Modify as Follows:

2015 International Residential Code

TABLE R302.1 (1)
EXTERIOR WALLS

For SI: 1 foot = 304.8 mm.

N/A = Not Applicable.

a. Roof eave fire-resistance rating shall be permitted to be reduced to 0 hours on the underside of the eave if fireblocking is provided from the wall top plate to the underside of the roof sheathing.

b. Roof eave fire-resistance rating shall be permitted to be reduced to 0 hours on the underside of the eave provided that gable vent openings are not installed.
c. Determination of fire resistance rating in accordance with ACI/TMS 216.1 shall ~~not~~ be ~~prohibited~~ permitted.

TABLE R302.1 (2)
EXTERIOR WALLS—DWELLINGS WITH FIRE SPRINKLERS

For SI: 1 foot = 304.8 mm.

N/A = Not Applicable

a. For residential subdivisions where all *dwellings* are equipped throughout with an automatic sprinkler system installed in accordance with Section P2904, the *fire separation distance* for nonrated exterior walls and rated projections shall be permitted to be reduced to 0 feet, and unlimited unprotected openings and penetrations shall be permitted, where the adjoining *lot* provides an open setback *yard* that is 6 feet or more in width on the opposite side of the property line.

b. The roof eave fire-resistance rating shall be permitted to be reduced to 0 hours on the underside of the eave if fireblocking is provided from the wall top plate to the underside of the roof sheathing.

c. The roof eave fire-resistance rating shall be allowed to be reduced to 0 hours on the underside of the eave provided that gable vent openings are not installed.
d. c. Determination of fire resistance rating in accordance with ACI/TMS 216.1 shall ~~not~~ be ~~prohibited~~ permitted.

R302.2 Townhouses. Common walls separating *townhouses* shall be assigned a fire-resistance rating in accordance with Section R302.2, Item 1 or 2. The common wall shared by two *townhouses* shall be constructed without plumbing or mechanical equipment, ducts or vents in the cavity of the common wall. The wall shall be rated for fire exposure from both sides and shall extend to and be tight against exterior walls and the underside of the roof sheathing. Electrical installations shall be in accordance with Chapters 34 through 43. Penetrations of the membrane of common walls for electrical outlet boxes shall be in accordance with Section R302.4.

1. Where a fire sprinkler system in accordance with Section P2904 is provided, the common wall shall be not less than a 1-hour fire-resistance-rated wall assembly tested in accordance with ASTM E 119 or UL 263 or determined in accordance with ACI/TMS 216.1.
2. Where a fire sprinkler system in accordance with Section P2904 is not provided, the common wall shall be not less than a 2-hour fire-resistance-rated wall assembly tested in accordance with ASTM E 119 or UL 263 or determined in accordance with ACI/TMS 216.1.

R302.3 Two-family dwellings. *Dwelling units* in two-family dwellings shall be separated from each other by wall and floor assemblies having not less than a 1-hour fire-resistance rating where tested in accordance with ASTM E 119 or UL 263 or determined in accordance with ACI/TMS 216.1. Fire-resistance-rated floor/ceiling and wall assemblies shall extend to and be tight against the *exterior wall*, and wall assemblies shall extend from the foundation to the underside of the roof sheathing.

- **Exceptions:**
  1. A fire-resistance rating of $^{1}/_{2}$ hour shall be permitted in buildings equipped throughout with an automatic sprinkler system installed in accordance with NFPA 13.
  2. Wall assemblies need not extend through *attic* spaces where the ceiling is protected by not less than $^{5}/_{8}$-inch (15.9 mm) Type X gypsum board, an *attic* draft stop constructed as specified in Section R302.12.1 is provided above and along the wall assembly separating the *dwellings* and the structural framing supporting the ceiling is protected by not less than $^{1}/_{2}$-inch (12.7 mm) gypsum board or equivalent.

R606.2.2 Clay or shale masonry units. Clay or shale masonry units shall conform to the following standards: ASTM C 34 for structural clay *load-bearing wall* tile; ASTM C 56 for structural clay nonload-bearing wall tile; ASTM C 62 for building brick

(solid masonry units made from clay or shale); ASTM C 1088 for solid units of thin veneer brick; ASTM C 126 for ceramic-glazed structural clay facing tile, facing brick and solid masonry units; ASTM C 212 for structural clay facing tile; ASTM C 216 for facing brick (solid masonry units made from clay or shale); ASTM C652 for hollow brick (hollow masonry units made from clay or shale); or ASTM C1405 for glazed brick (single-fired solid brick units).

Exception: Structural clay tile for nonstructural use in fireproofing of structural members and in wall furring shall not be required to meet the compressive strength specifications. The fire-resistance rating shall be determined in accordance with ASTM E 119, UL 263 or ~~determined in accordance with~~ _ ACI/TMS 216.1 and shall comply with the requirements of Section R302.

Commenter's Reason: These changes eliminate the double negative in the original proposal and provide editorial cleanup. Providing a reference to ACI 216.1 gives the users of the International Residential Code an additional option for compliance with determining the fire resistance of wall assemblies.

RB31-16

RB36-16
IRC: R302.1.1 (New).

Proposed Change as Submitted

Proponent : Kevin McOsker, representing Southern Nevada Chapter of ICC (ktm@ClarkCountyNV.gov)

2015 International Residential Code

Add new text as follows:

R302.1.1 Exterior Wall Covering. Unprotected *exterior wall coverings* shall not project more than 4 inches (102 mm) into the minimum *fire separation distance.*

Reason: Table R302.1(1) and R302.1(2) establish the required minimum fire separation rating of exterior wall elements based on fire separation distance. The difference is Table R302.1(1) deals with dwellings without sprinklers and Table R302.1(2) is for buildings with sprinklers.
The definition of "fire separation distance" requires the setback measurement to be taken from the building face. This requires that the building placement is determined by the exterior wall covering. This could create conflict if a designed product is not available or a design change causes a thicker system to be installed. For example; changing from a three coat Portland cement plaster to an EIFS system, or adding a stone veneer. By code the dwelling is no longer code compliant. This will allow flexibility in the design, without putting a hardship on the construction.

Also, by definition, exterior wall covering includes "architectural trim and embellishments".

The intent of this proposal is not to change any of the required setbacks, but to clarify and simplify the building placement and verification of fire separation distance, by making it similar to the IBC, which allows architectural projections, pop outs, and other features to protrude into the fire separation distance, under certain conditions.

Cost Impact: Will not increase the cost of construction
This will allow flexibility in the design, without putting a hardship on the construction.

RB36-16 :
R302.1.1 (NEW)-
MCOSKER12176

Public Hearing Results

Committee Action: **Disapproved**

Committee Reason: The proposal moves the line and there is a reason we have a line. The code says to measure to the face of the building and the proposed language doesn't make sense. A better option might be to adjust the definition of fire separation distance. The concept may have some potential but the proposed language does not work.

Assembly Action: **None**

Individual Consideration Agenda

Public Comment 1:

Proponent : Matthew Dobson, Vinyl Siding Institute, representing Vinyl Siding Institute (mdobson@vinylsiding.org) requests Approve as Modified by this Public Comment.

Modify as Follows:

2015 International Residential Code

SECTION 202 DEFINITIONS

[RB] FIRE SEPARATION DISTANCE. The distance measured from the building face to one of the following:

1. To the closest interior *lot line*.
2. To the centerline of a street, an alley or public way.
3. To an imaginary line between two buildings on the *lot*.

The distance shall be measured at a right angle from the face of the foundation wall.

Commenter's Reason: This slight modification helps to address the true intent of the original proposal, which is is

where should the fire separation distance be measurement. What is the building face? The foundation face seems like that logical place. This will help to clear up any problems from this measurement and the code being gray.

Proponent : Joseph Holland, representing Hoover Treated Wood Products (jholland@frtw.com) requests Approve as Submitted.

Commenter's Reason: There was confusion as to what the proposal intended. It is a reasonable allowance from the required fire separation distance. There is nothing magical about a definitive distance. If the building has 5 feet 1/8 inch fire separation distance, no protection is needed. At five feet one-hour protection becomes mandatory. It is doubtful the 1/8 inch makes any significant difference in the fire exposure. The same can be said of a four inch difference.. Approval will allow the code official latitutde when inspecting for compliace with the code.

RB36-16

RB41-16
IRC: R302.2.

Proposed Change as Submitted

Proponent : Ali Fattah, City of San Diego Development Services Department (afattah@sandiego.gov)

2015 International Residential Code

Revise as follows:

R302.2 Townhouses. Common walls separating *townhouses* shall be assigned a fire-resistance rating in accordance with Section R302.2, Item 1 or 2. The common wall shared by two *townhouses* shall be constructed without plumbing or mechanical equipment, ducts or vents in the cavity of the common wall. The wall shall be rated for fire exposure from both sides and shall extend to and be tight against exterior walls and the underside of the roof sheathing. ~~Electrical installations shall be in accordance with Chapters 34 through 43.~~ Penetrations of the membrane of common walls for electrical outlet boxes shall be in accordance with Section ~~R302.4~~ R302.4.2.

1. Where a fire sprinkler system in accordance with Section P2904 is provided, the common wall shall be not less than a 1-hour fire-resistance-rated wall assembly tested in accordance with ASTM E 119 or UL 263.
2. Where a fire sprinkler system in accordance with Section P2904 is not provided, the common wall shall be not less than a 2-hour fire-resistance-rated wall assembly tested in accordance with ASTM E 119 or UL 263.

Reason: The IRC intends for Townhouses to behave like separate buildings and it is inferred that common utilities should not be shared across the common wall separating townhouse dwelling units. Additionally by definition a Townhouse is a "single-family *dwelling unit* constructed in a group of three or more attached units ...". Additionally, the IRC Commentary explains under Section R302.2.4 that the IRC intends that a Townhouse owner can remove a townhouse unit without affecting the adjacent dwelling unit. As a result it is clear from Section R3202.2 and R302.2.4 that the IRC does not intend for Townhouses to share utilities and systems and therefore common wiring and piping is not permitted through the wall separating townhouse units.

The proposed code change deletes the reference to Chapter 34 through 43 since it is not necessary since the Sections do not include construction standards relevant to maintaining fire resistance addresed in Section R302.2.

The IRC is one code that includes construction stnadards normally found in separate codes such as a building code, plumbing code, mechanical code, energy efficiency code, etc. The IRC includes a table of contents and the requirements in the struck text are not located in a separate electrical code.

The revised IRC code Section reference to Section R302.4.2 more accurately reflects the text preceding the code reference that implies only membrane penetrations of the common wall are permitted and not through penetrations.

Cost Impact: Will not increase the cost of construction

The prpposed code change is editorial and does not add requirements so the cost of construction is not impacted.

RB41-16 : R302.2-FATTAH11801

Public Hearing Results

Committee Action: **Disapproved**

Committee Reason: The committee does not see a need for this proposed change.

Assembly Action: **None**

Individual Consideration Agenda

Proponent : Ali Fattah, City of San Diego Development Services Department, representing City of San Diego Development Services Department (afattah@sandiego.gov) requests Approve as Submitted.

Commenter's Reason: This is an editorial code change to correctly reference a section and delete unnecessary text as outlined in the reason statement. We disagree with the committee that this code change is not necessary because some contractors do not differentiate between types of penetrations or the differences between through and membrane penetrations.

The IRC is clear that the common wall "..shall be constructed without plumbing or mechanical equipment, ducts or vents in the cavity of the common wall..." So a pipe passing through the common wall has a portion of it in a wall so it is prohibited.

Sharing common water supply or other utilities such as gas lines or electrical supply lines across townhouses through attics or floors is contrary to the objectives of the IRC with the common wall. It would be even worst if fire sprinkler piping serving one unit passed through the attic of another unit. Both the common wall option or the separate wall option consistently do not allow through plumbing penetrations.

This code change is only focused on the clarification that electrical penetrations are only permitted to be membrane penetrations.

RB41-16

RB49-16

IRC: R302.2, R302.2.4, R302.2.5 (New).

Proposed Change as Submitted

Proponent : Ali Fattah, City of San Diego Development Services Department (afattah@sandiego.gov)

2015 International Residential Code

R302.2 Townhouses. ~~Common walls~~

Common walls separating *townhouses* shall be assigned a fire-resistance rating in accordance with Section R302.2, Item 1 or 2. The common wall shared by two *townhouses* shall be constructed without plumbing or mechanical equipment, ducts or vents in the cavity of the common wall. The wall shall be rated for fire exposure from both sides and shall extend to and be tight against exterior walls and the underside of the roof sheathing. Electrical installations shall be in accordance with Chapters 34 through 43. Penetrations of the membrane of common walls for electrical outlet boxes shall be in accordance with Section R302.4.

1. Where a fire sprinkler system in accordance with Section P2904 is provided, the ~~common wall~~*common wall* shall be not less than a 1-hour fire-resistance-rated wall assembly tested in accordance with ASTM E 119 or UL 263.
2. Where a fire sprinkler system in accordance with Section P2904 is not provided, the ~~common wall~~*common wall* shall be not less than a 2-hour fire-resistance-rated wall assembly tested in accordance with ASTM E 119 or UL 263.

Revise as follows:

R302.2.4 Structural independence. Each individual *townhouse* shall be structurally independent.

Exceptions:

1. Foundations supporting *exterior walls* or common walls.
2. Structural roof and wall sheathing from each unit fastened to the common wall framing.
3. Nonstructural wall and roof coverings.
4. Flashing at termination of roof covering over common wall.
5. ~~*Townhouses* separated by a common wall as provided in Section R302.2, Item 1 or 2.~~

Add new text as follows:

R302.2.5 Common wall stability. *Common walls* shall be designed and constructed to allow collapse of the *Townhouse* dwelling unit on either side without collapse of the *party wall* under fire conditions.

Reason: The IRC commentary clarifies that the intent of the Townhouse requirements is for each townhouse, defined as an attached single family dwelling, to function independently of other townhouse units. For example the sprinkler system required is NFPA 13-D and not NFPA 13-R which is common for multi-unit buildings under the IBC. Additionally the IRC does not intend for utilities to be shared across walls separating Townhouse dwelling units whether separated with a common wall or two separate fire resistance rated walls. The IRC also intends for the units to be structurally independent to allow demolition or alteration of Townhouse without affecting an adjacent one. The code provides for exceptions to the structural independence due to specific elements such as extending roof coverings, using common foundations, allowing sheathing on both sides of the common wall to be attached to the common studs, and allowing flashing to extend across the common wall between the Townhouse units. The code additionally exempts designs utilizing a common wall from structural independence which seems to encourage the use of of common walls due to the structural benefits.

It is unusual in the ICC family of codes for an exception that is a part of a series of exceptions to completely eliminate a requirement as is the case with exception 5 and structural independence. Additionally lack of structural independence may have a negative impact on structural behavior under fire where structural framing members may extend into a neighboring unit or where the lateral force resisting system may be shared thereby rendering the adjoining Townhouse unit under fire structurally unstable during or after a fire event. Exception 5 contradicts the intent of the code.

We believe that the common wall separation was proposed to act similarly to a fire wall and that due to the prescriptive nature of the IRC requirements, many of the performance based rules were simplified when compared to the IBC. However with the wide adoption of the IRC it is clear that there are significant differences in requirements between the IBC Group R-3 and R-2 occupancies and residential uses regulated under the IRC. Many developers are choosing Townhouse designs under the IRC rather the IBC due to less restrictive fire separation and means of egress requirements among-st other reasons. So this anomaly of exception 5 is becoming a more frequent issue in establishing the applicable code to enforce and the occupancy classification.

We believe that the common wall requirements as proposed in the IRC will accomplish the intent of the fire separation requirements and as a collateral benefit will result in the level of structural independence intended.

Townhouses prior to the 2009 IRC did not require fire sprinklers and were separated with two one-hour walls or a common 2 hour wall. After adoption of the sprinkler requirements into the IRC the fire resistance oft the separation in either configuration was changed to one-hour. In the 2015 IRC townhouses separated with two-independent one hour wall offer a level of structural independence not provided with the common wall option. Generally when the code provides options the two options should

provide equivalent results. However, exception 5 will not result in building performance to townhouses separated with two independent one hour walls constructed per Section R302.1.

Cost Impact: Will increase the cost of construction
The proposed code change will not allow the sharing of structural elements and systems, however when the loads resisted are divided by 1/2 due to a lack of load sharing it is expected that the quantity of additional materials will not double as a consequence of applying the code change to a project. The IRC has many prescriptive solutions and does not intend for beams to be used without a structural design. Additionally braced wall panel requirements allow for wall bracing utilizing narrow panels.

RB49-16 : R302.2.4-FATTAH11499

Public Hearing Results

Committee Action: **Disapproved**

Committee Reason: This proposal goes beyond what is intended in the IRC for townhouse separation. This conflicts with prior committee action to allow two 1 hour fire resistance rated walls between townhouse dwelling units. The common wall provisions need to be retained.

Assembly Action: **None**

Individual Consideration Agenda

Proponent : Scott Campbell, representing Portland Cement Association (scampbell@cement.org) requests Approve as Submitted.

Commenter's Reason: This proposal was meant to ensure the independent structural stability of townhomes. It clarifies that each townhome be independently stable under fire conditions, and does so by removing the exemption from independence for townhomes with common walls. Contrary to the Committee Reason, the change does not prohibit the use of two 1-hour fire walls, but merely says that in any condition the two units on either side of the wall(s) must be independently stable. The proposed change is clearly in the interest of public safety and property protection.

Proponent : Ali Fattah, City of San Diego Development Services Department, representing City of San Diego Development Services Department (afattah@sandiego.gov) requests Approve as Submitted.

Commenter's Reason: We request that the membership of the ICC approve this code change as submitted.
The committee reason for denial precisely addresses the issue at hand. When the option of constructing two separate walls is chosen, some separation / air gap will exist between the Townhouse units. When assigned to a Seismic Design Category (SDC) a seismic separation will be required for designs in Seismic Design Category D and higher. Additionally two separate one-hour walls will allow complete burnout of an involved Townhouse without structurally damaging the adjacent Townhouse. The common wall option should meet the same performance objective as stated in the heading for Section R302.2.4 "Structural Independence".

We appreciate that the IRC commentary is not code language however it is addressing a code conflict that exception # 5 causes with the charging section.

The most significant difference between group R-3 and Group R-2 in the IBC is the structural independence of the R-3 occupancy. A Group R-2 occupancy shares framing, utilities, often means of egress and address fire exposure from one dwelling unit to other dwelling units in the building.

Single family dwellings, classified as R-3 occupancies under the IBC, and dwellings and Townhouses under the IRC provide for limited or no communication between units, limit the number of dwelling units per building and require buildings to be separated to include one-hour walls with no openings. Dwellings on separate lots or that are separated by fire separation distances that are less than 3 ft are still separated.

Requirements for townhouses classified as Group R-2, necessary when the scoping limitations of the IRC are not satisfied and therefore the design of the Townhouses needs to comply with the IBC, are significantly more restrictive when fire separation distances and exterior wall opening limitations are considered; fire resistance rated type of construction and

fire protection requirements are also significantly more restrictive. However, fire access required under the fire code will be the same for dwelling units and townhouses under the IRC or the IBC.

The text proposed in Section R302.2.5 satisfies the intent of the IRC as stated in the commentary and provides for performance consistent with the double wall option referenced by the committee. This code change will not conflict with code change RB 44-16 that was approved by the committee as is stated in the reason statement.

A simple framing method to satisfy the performance objective of the proposed code section is for roof and floor framing to be parallel to the wall.

We refer you to our original reason statement for more information.

RB49-16

RB51-16
IRC: R302.3.

Proposed Change as Submitted

Proponent : Jeffrey Shapiro, representing IRC Fire Sprinkler Coalition (jeff.shapiro@intlcodeconsultants.com)

2015 International Residential Code

Revise as follows:

R302.3 Two-family dwellings. *Dwelling units* in two-family dwellings shall extend from foundation to roof, be provided with a yard or
public way on not less than three sides and shall be separated from each other by wall~~ and floor~~ assemblies having not less than a 1-hour fire-resistance rating where tested in accordance with ASTM E 119 or UL 263. Fire-resistance-rated ~~floor/ceiling and~~ wall assemblies shall extend to and be tight against the *exterior wall*, ~~and~~ ~~wall assemblies~~ shall extend from the foundation to the underside of the roof sheathing.

Exceptions:

1. A fire-resistance rating of $^{1}/_{2}$ hour shall be permitted in buildings equipped throughout with an automatic sprinkler system installed in accordance with ~~NFPA 13~~ Section P2904.
2. Wall assemblies need not extend through *attic* spaces where the ceiling is protected by not less than $^{5}/_{8}$-inch (15.9 mm) Type X gypsum board, an *attic* draft stop constructed as specified in Section R302.12.1 is provided above and along the wall assembly separating the *dwellings* and the structural framing supporting the ceiling is protected by not less than $^{1}/_{2}$-inch (12.7 mm) gypsum board or equivalent.
3. *Dwelling units* in two-family dwellings shall be permitted to be vertically stacked where the building is equipped throughout with an automatic sprinkler system installed in accordance with Section P2904 and the dwelling units are separated by a floor assembly having a 1/2-hour fire-resistance rating where tested in accordance with ASTM E 119 or UL 263.

Reason: Most people envision duplexes as side-by-side dwellings. Where duplexes are stacked they can potentially involve a one-story home with an occupiable attic over a 2-story home, i.e. from a firefighting and rescue perspective, a 4-story structure. Although the code intends to require sprinklers in all new homes, 16 states legislatively prohibit enacting this requirement at the state or local level. It is a well-established fact that fires spread much more quickly in a vertical direction than a horizontal direction, and when the fire breaches a window or door, flames will quickly envelop occupied spaces and attics above. This proposal addresses the concern by limiting stacked duplexes such that they would only be allowed when sprinklers are provided and allows reduction of the required separation to 1/2 hour based on Section P2904 compliant sprinkler systems.

Cost Impact: Will not increase the cost of construction
Since the IRC already requires sprinklers in all dwellings, this proposal does not increase the cost of constructing a two-family dwelling in accordance with the model code.

RB51-16 : R302.3-SHAPIRO12905

Public Hearing Results

Committee Action: **Disapproved**

Committee Reason: Stacked is just as common as side-by-side construction in some areas. If exceptions are offered, then all buildings referenced in the reason statement do not need to be sprinklered.

Assembly Action: **None**

Individual Consideration Agenda

Proponent : Jeffrey Shapiro, representing IRC Fire Sprinkler Coalition (jeff.shapiro@intlcodeconsultants.com) requests Approve as Submitted.

Commenter's Reason: Based on original substantiation.

RB51-16

RB52-16
IRC: R302.3.

Proposed Change as Submitted

Proponent : Stephen Thomas, Colorado Code Consulting, LLC (sthomas@coloradocode.net)

2015 International Residential Code

Revise as follows:

R302.3 Two-family dwellings. *Dwelling units* in two-family dwellings located on a single lot shall be separated from each other by wall and floor assemblies having not less than a 1-hour fire-resistance rating where tested in accordance with ASTM E 119 ~~or~~ , UL 263 or Chapter 7 of the International Building Code. Dwelling units in two-family dwellings divided by a lot line shall be separated by two 1-hour fire resistance rated wall assemblies tested in accordance with ASTM E119, UL 263 or Chapter 7 of the International Building Code. Fire-resistance-rated floor/ceiling and wall assemblies shall extend to and be tight against the *exterior wall*, and wall assemblies shall extend from the foundation to the underside of the roof sheathing.

Exceptions:

1. A fire-resistance rating of $^{1}/_{2}$ hour shall be permitted in buildings equipped throughout with an automatic sprinkler system installed in accordance with NFPA 13.
2. Wall assemblies need not extend through *attic* spaces where the ceiling is protected by not less than $^{5}/_{8}$-inch (15.9 mm) Type X gypsum board, an *attic* draft stop constructed as specified in Section R302.12.1 is provided above and along the wall assembly separating the *dwellings* and the structural framing supporting the ceiling is protected by not less than $^{1}/_{2}$-inch (12.7 mm) gypsum board or equivalent.

Reason: There has been confusion regarding the separation between two dwelling units in a two-family dwelling. The code requires a one-hour fire-resistance assembly between the units. However, there is an ICC Committee interpretation (41-03) that states "An attached two-family dwelling with a property line between the two dwelling units is considered two separate buildings, located on two separate lots. Two individual dwellings must comply with the fire separation distance required in Section R302.1". ICC seminars also support this position.
The intent of this proposal is to clarify this requirement by including the language to clarify that a two family dwelling on a single lot would be constructed as a single building and the single one-hour wall would be acceptable. However, if a lot line is placed between the two dwelling units, you would have a dwelling on a separate lot and the exterior walls would need to be protected in accordance with Section 302 as separate buildings. We are just trying to make sure the code reads the way it is intended to read.

Cost Impact: Will increase the cost of construction
This may increase the cost in jurisdictions that have only been requiring a single one-hour wall between the dwelling units.

RB52-16 : R302.3-THOMAS12605

Public Hearing Results

Committee Action: **Disapproved**

Committee Reason: The proposed language, including the proposed modifications, complicates the existing requirements of the code.

Assembly Action: **None**

Individual Consideration Agenda

Public Comment 1:

Proponent : Stephen Thomas, Colorado Code Consulting, LLC, representing Colorado Chapter ICC (sthomas@coloradocode.net); Richelle McMurtry, representing Home Builders Association of Metro Denver (rmcmurtry@hbadenver.com) requests Approve as Modified by this Public Comment.

Modify as Follows:

2015 International Residential Code

R302.3 Two-family dwellings. *Dwelling units* in two-family dwellings ~~located on a single lot~~ shall be separated from each other by wall and floor assemblies having not less than a 1-hour fire-resistance rating where tested in accordance with ASTM E

119, UL 263 or ~~Chapter 7~~ Section 703 of the International Building Code~~. Dwelling units in two-family dwellings divided by~~ regardless of whether a lot line ~~shall be separated by~~ exists between the two ~~1-hour fire resistance rated wall assemblies tested in accordance with ASTM E119, UL 263~~ dwelling units or ~~Chapter 7 of the International Building Code~~ not. Fire-resistance-rated floor/ceiling and wall assemblies shall extend to and be tight against the *exterior wall*, and wall assemblies shall extend from the foundation to the underside of the roof sheathing.

Exceptions:

1. A fire-resistance rating of $^{1}/_{2}$ hour shall be permitted in buildings equipped throughout with an automatic sprinkler system installed in accordance with NFPA 13.
2. Wall assemblies need not extend through *attic* spaces where the ceiling is protected by not less than $^{5}/_{8}$-inch (15.9 mm) Type X gypsum board, an *attic* draft stop constructed as specified in Section R302.12.1 is provided above and along the wall assembly separating the *dwellings* and the structural framing supporting the ceiling is protected by not less than $^{1}/_{2}$-inch (12.7 mm) gypsum board or equivalent.

Commenter's Reason:

THOMAS: This section has always been confusing for users of the code. The language says that the separation between dwelling units in a two-family dwelling must be a one-hour fire-resistant rated assembly. Many people have morphed this requirement into saying that if a lot line exists between the two units, then two one-hour walls must be provided. This opinion is also supported by an ICC Committee interpretation. The language of the code does not support this position. It just says that the wall or floor has to be one-hour rated. The fire does not know whether there is a lot line present or not. The only issue is liability between the two owners. That is not a code issue. If we believe that a one-hour separation is sufficient without a lot line, why does that change when we put a lot line in. It only has to do with ownership.

The committee felt that the original proposal complicated the section. So, this revisions will make the code easier to use. The original change was designed to put language in the code to agree with the committee interpretation and ICC seminars. The committee disagreed with this logic and disapproved the language. This modification simplifies the code and provides the user with a clear understanding of what the separation should be.

MCMURTRY: The HBA of Metro Denver approves the proposal as modified by Steve Thomas during public comments. Fire separation requirements should not be determined by lot lines (as they can change over time). This code standardizes fire-separation standards for the safety of inhabitants, regardless of lot line determinations.

RB52-16

RB67-16
IRC: R302.13.

Proposed Change as Submitted

Proponent : Richard Davidson, representing Self

2015 International Residential Code

Revise as follows:

R302.13 Fire protection of floors. ~~Floor~~
All floor assemblies ~~that are not required elsewhere in this code to be fire-resistance rated,~~ shall be provided with a $^{1}/_{2}$-inch (12.7 mm) gypsum wallboard membrane, or $^{5}/_{8}$-inch (16 mm) wood structural panel membrane~~, or equivalent~~ on the underside of the floor framing member. Penetrations or openings for ducts, vents, electrical outlets, lighting, devices, luminaires, wires, speakers, drainage, piping and similar openings or penetrations shall be permitted. Walls, columns, or other members supporting assemblies required to be protected by this section shall be provided with protection equivalent to that provided for the floor.

Exceptions:

1. Floor assemblies located directly over a space protected by an automatic sprinkler system in accordance with Section ~~P2904, NFPA 13D, or other approved equivalent sprinkler system~~ R313..
2. ~~Floor assemblies located directly over a crawl space not intended for storage or fuel-fired appliances.~~
3. Floor assemblies required to be protected by Sections R302.3, R302.6, or R302.7..
4. Portions of floor assemblies shall be permitted to be unprotected where complying with the following:
   - ~~4.1.The aggregate area of the unprotected portions does not exceed 80 square feet (7.4 m^2) per story~~
   - ~~4.2.Fireblocking in accordance with Section R302.11.1 is installed along the perimeter of the unprotected portion to separate the unprotected portion from the remainder of the floor assembly.~~
   - 4.3.A maximum of 150 square feet of floor assembly in each story is allowed be unprotected. The unprotected assembly must be separated from the protected assembly by a layer of $^{1}/_{2}$- inch gypsum board, $^{5}/_{8}$-inch structural panel sheathing, or solid sawn lumber blocking applied around the perimeter of the unprotected area.
   - 4.4.Floor assemblies or landlings where the underfloor space is enclosed on all sides and a means to access such underfloor space is not provided.
   - 4.5.Floor assemblies where the underfloor space is exposed to the exterior or is not within surrounding foundation walls of the dwelling such as, but not limited to decks, porches, or dwellings constructed on piers.
   - 4.6.Floor assemblies of additions to existing dwellings.
   - 4.7.Floor assemblies in detached accessory structures.
5. Wood floor assemblies using dimension lumber or structural composite lumber equal to or greater than 2-inch by 10-inch (50.8 mm by 254 mm) nominal dimension, or other approved floor assemblies demonstrating equivalent fire performance.

Reason: This revision involves a little language cleanup for clarity, readability, and reasonability. The first paragraph has largely editorial revisions. A new sentence has been added that addresses protection of structural members supporting the fire protected floor assembly. There are numerous examples in the IRC consistent with this language including protection of walls in a garage when the ceiling is part of the garage/dwelling separation. Remember, the garage separation is not an assembly either, just a membrane. This change also acknowledges the possibility that load bearing walls may be steel studs that could fail long before the floor does. There needs to be some consistency in the thought process.
In exception #1, the reference to other approved systems is deleted. If other systems are known to exist, they should be noted. Otherwise the code already allows consideration of equivalencies.

The second exception is proposed for deletion. Crawl spaces aren't required to have sprinkler protection. Crawl spaces will be used for storage if there is access provided. Let's not kid ourselves. Let's simplify the process because you cannot plan check or inspect "not intended for". The builder/owner can decide to either add sprinkler protection, provide the membrane protection, or seal the area off completely.

A new second exception is added that specifically identifies the three locations in the code where floor assemblies must have a fire-resistant membrane. No more guessing.

The first two subsections of the third exception are combined into one exception as both parts must be used together to make sense. As currently written, one can take them as two different exceptions because that is how it is written. This can cause confusion and a lack of uniformity. Furthermore, the exception has been amended to increase the size of the unprotected space from 80 square feet to 150 square feet. Furnace/mechanical/laundry rooms are the most problematic places for compliance what with pipes, ducts, vents, etc., making a ceiling installation difficult. Most of these spaces exceed 80 square feet (which is an arbitrary limit) so again we are faced with boxing out small portions of the ceiling to meet the 80 square foot limit. 150 square

feet is a more workable size. The exception is further revised to address the perimeter separation. The term "fire blocking" is inappropriate for this application as many methods do not lend themselves to this environment and fire blocking by definition is intended for concealed spaces.

Additional means to allow unprotected portions of floor assemblies are addressed with several new items.

An exception is provided for landings and floor assemblies that are completely enclosed and not provided with a means to access such space thereby preventing fires from spreading to those areas.

An exception is provided for floors open to the exterior (decks, porches). It should be readily identifiable to the fire service if the space under such areas is on fire.

An exception is added for additions to existing dwellings. It makes little sense to require the basement ceiling of a 12 X 12 addition to an existing 2000 square foot house to be protected when the rest of the ceiling is unprotected. The rule has to have some semblance of reasonableness. Homes that have sprinkler protection will already be covered.

The last exception excludes protection for floors for detached accessory structures. This might be an attic storage space in a detached garage or the second floor of a small children's play house. There should be no need for entry of the fire service into these areas as they are not habitable space.

Exception number four is proposed for deletion for several reasons. New homes and additions are occasionally constructed with a mix of different size floor framing members. This can result in a patchwork of floor systems that require protection mixed with some that don't. No one believes that such a system serves any purpose.

And, recent studies show there is little difference in the performance of various structural floor systems in fire conditions. We need to do what many folks said at the hearings when this proposal was approved and "level the playing field", "protect them all". Is a floor of 2X8's 12" o.c. less resistant to collapse from a fire than 2X10's at 24" o.c.? I doubt it. Let's eliminate the confusion and "level the playing field". Protect them all.

Cost Impact: Will not increase the cost of construction
This proposal should reduce costs by lessening regulations.

RB67-16 :
R302.13-
DAVIDSON10814

Public Hearing Results

Committee Action: **Disapproved**

Committee Reason: This proposal removes fireblocking which is important to the integrity of the under-floor area.

Assembly Action: **None**

Individual Consideration Agenda

Public Comment 1:

Proponent : Joseph Holland, Hoover Treated Wood Products, representing Hoover Treated Wood Products (jholland@frtw.com) requests Approve as Modified by this Public Comment.

Modify as Follows:

2015 International Residential Code

R302.13 Fire protection of floors. All floor assemblies shall be provided with a $^{1}/_{2}$-inch (12.7 mm) gypsum wallboard membrane, or $^{5}/_{8}$-inch (16 mm) wood structural panel membrane on the underside of the floor framing member. Penetrations or openings for ducts, vents, electrical outlets, lighting, devices, luminaires, wires, speakers, drainage, piping and similar openings or penetrations shall be permitted. Walls, columns, or other members supporting assemblies required to be protected by this section shall be provided with protection equivalent to that provided for the floor.

Exceptions:

1. Floor assemblies located directly over a space protected by an automatic sprinkler system in accordance with Section R313..
2. Floor assemblies required to be protected by Sections R302.3, R302.6, or R302.7..
3. Portions of floor assemblies shall be permitted to be unprotected where complying with the following:
   3.1. A maximum of 150 square feet of floor assembly in each story is allowed be unprotected. The unprotected assembly must be separated from the protected assembly by a layer of $^{1}/_{2}$- inch gypsum board, $^{5}/_{8}$-inch

structural panel sheathing, 1/2-inch fire-retardant-treated structural panel sheathing, or solid sawn lumber blocking applied around the perimeter of the unprotected area.

3.2. Floor assemblies or landlings where the underfloor space is enclosed on all sides and a means to access such underfloor space is not provided.

3.3. Floor assemblies where the underfloor space is exposed to the exterior or is not within surrounding foundation walls of the dwelling such as, but not limited to decks, porches, or dwellings constructed on piers.

3.4. Floor assemblies of additions to existing dwellings.

3.5. Floor assemblies in detached accessory structures.

4. Wood floor assemblies using dimension lumber or structural composite lumber equal to or greater than 2-inch by 10-inch (50.8 mm by 254 mm) nominal dimension, or other approved floor assemblies demonstrating equivalent fire performance.

Commenter's Reason: In addition to the clean up suggested by the proponent, 1/2 inch FRTW is added as a permitted material. The FRTW will accomplish three things. The 1/2 will be give added protection by limiting the rate of flame spread and the treatment will give additional time to burn through. Untreated wood structural panels 5/8 inch thick, depending on the species and whether it is plywood or OSB, have flame speads in the range of 70 to 160. The code requires FRTW's flame spead be 25 or less. In addition, but not a code requirement the FRTW will have a much lower smoke developed rating than untreated wood.

RB67-16

RB68-16
IRC: R302.13.

Proposed Change as Submitted

Proponent : Bruce Swiecicki, representing National Propane Gas Association (bswiecicki@npga.org)

2015 International Residential Code

Revise as follows:

R302.13 Fire protection of floors. Floor assemblies that are not required elsewhere in this code to be fire-resistance rated, shall be provided with a $^{1}/_{2}$-inch (12.7 mm) gypsum wallboard membrane, $^{5}/_{8}$-inch (16 mm) wood structural panel membrane, or equivalent on the underside of the floor framing member. Penetrations or openings for ducts, vents, electrical outlets, lighting, devices, luminaires, wires, speakers, drainage, piping and similar openings or penetrations shall be permitted.

Exceptions:

1. Floor assemblies located directly over a space protected by an automatic sprinkler system in accordance with Section P2904, NFPA 13D, or other approved equivalent sprinkler system.
2. Floor assemblies located directly over a crawl space not intended for storage~~ or fuel-fired appliances~~.
3. Portions of floor assemblies shall be permitted to be unprotected where complying with the following:
   3.1. The aggregate area of the unprotected portions does not exceed 80 square feet (7.4 m^2) per story
   3.2. Fireblocking in accordance with Section R302.11.1 is installed along the perimeter of the unprotected portion to separate the unprotected portion from the remainder of the floor assembly.
4. Wood floor assemblies using dimension lumber or structural composite lumber equal to or greater than 2-inch by 10-inch (50.8 mm by 254 mm) nominal dimension, or other approved floor assemblies demonstrating equivalent fire performance.

Reason: The requirement for installing protection on the underside of a floor assembly over a crawl space where a fuel-fired appliances is installed in the crawl space first appeared in Section 501.3 of the 2012 edition of the IRC. The text came in during the final action hearings of RB31-09/10, when three public comments were combined into the final text. In the 2015 edition, the text was moved into Section R 302.13.

Looking at the public comments associated with RB31-09/10, there is no substantiation or technical justification for including fuel-fired appliances. Listed gas-fired appliances are tested to the ANSI Z21/83 standards that are recognized and used not only in the United States but also Canada and other countries. Gas appliances are required to undergo testing that measures the temperatures on surrounding construction while the appliance is in an "over-fired" condition. All listed gas appliances are required to state the necessary clearance to combustible construction in the installation instructions.

Singling out fuel-fired appliances as a trigger for protecting the underside of a floor assembly over a crawl space is not justified. This provision imposes an unfair burden on gas appliances and provides an incentive for builders to install electric appliances instead, even though those appliances also produce heat and may contribute to elevated temperatures in their surroundings.

Acceptable but less desirable alternatives to this proposal would be to limit the requirement for protection when unlisted fuel-burning appliances are installed in the crawl space. This would recognize the fact that the temperatures on surrounding construction for unlisted appliances may not be known. Another alternative would be to include any heat-producing appliance that may be installed in the crawl space. Doing so would then address the presumed issue of concern (elevated temperatures) in a manner that does not discriminate based on the energy source for the appliance.

Cost Impact: Will not increase the cost of construction
This proposal will reduce the cost of construction by removing a requirement from the code for certain installations.

RB68-16 :
R302.13-
SWIECICKI13131

Public Hearing Results

Committee Action: **Approved as Modified**

Modification:

R302.13 Fire protection of floors. Floor assemblies that are not required elsewhere in this code to be fire-resistance rated, shall be provided with a $^{1}/_{2}$-inch (12.7 mm) gypsum wallboard membrane, $^{5}/_{8}$-inch (16 mm) wood structural panel membrane, or equivalent on the underside of the floor framing member. Penetrations or openings for ducts, vents, electrical outlets, lighting, devices, luminaires, wires, speakers, drainage, piping and similar openings or penetrations shall be permitted.

- **Exceptions:**
  1. Floor assemblies located directly over a space protected by an automatic sprinkler system in accordance with Section P2904, NFPA 13D, or other approved equivalent sprinkler system.
  2. Floor assemblies located directly over a crawl space not intended for storage or for the installation of fuel-fired or electric-powered appliances.
  3. Portions of floor assemblies shall be permitted to be unprotected where complying with the following:
     3.1. The aggregate area of the unprotected portions does not exceed 80 square feet (7.4 m^2) per story
     3.2. Fireblocking in accordance with Section R302.11.1 is installed along the perimeter of the unprotected portion to separate the unprotected portion from the remainder of the floor assembly.
  4. Wood floor assemblies using dimension lumber or structural composite lumber equal to or greater than 2-inch by 10-inch (50.8 mm by 254 mm) nominal dimension, or other approved floor assemblies demonstrating equivalent fire performance.

Committee Reason: The modification addresses all fuel equipment, which is appropriate. The proposal provides complete exceptions and addresses all fuel-fired equipment.

Assembly Action: **None**

Individual Consideration Agenda

Public Comment 1:

Proponent : Paul Coats, PE CBO, representing American Wood Council (pcoats@awc.org) requests Approve as Modified by this Public Comment.

Further Modify as Follows:

2015 International Residential Code

R302.13 Fire protection of floors. Floor assemblies that are not required elsewhere in this code to be fire-resistance rated, shall be provided with a $^1/_2$-inch (12.7 mm) gypsum wallboard membrane, $^5/_8$-inch (16 mm) wood structural panel membrane, or equivalent on the underside of the floor framing member. Penetrations or openings for ducts, vents, electrical outlets, lighting, devices, luminaires, wires, speakers, drainage, piping and similar openings or penetrations shall be permitted.

Exceptions:

1. Floor assemblies located directly over a space protected by an automatic sprinkler system in accordance with Section P2904, NFPA 13D, or other approved equivalent sprinkler system.
2. Floor assemblies located directly over a crawl space not intended for ~~storageor~~ storage or for the installation of fuel-fired or electric-powered heating appliances.
3. Portions of floor assemblies shall be permitted to be unprotected where complying with the following:
   3.1. The aggregate area of the unprotected portions does not exceed 80 square feet (7.4 m^2) per story
   3.2. Fireblocking in accordance with Section R302.11.1 is installed along the perimeter of the unprotected portion to separate the unprotected portion from the remainder of the floor assembly.
4. Wood floor assemblies using dimension lumber or structural composite lumber equal to or greater than 2-inch by 10-inch (50.8 mm by 254 mm) nominal dimension, or other approved floor assemblies demonstrating equivalent fire performance.

Commenter's Reason: Electric appliances could be interpreted to include sump pumps and other appliances less hazardous than heating appliances. Limiting the restriction to heating appliances, to include all fuel-fired and electric furnaces and water heaters, is appropriate.

RB68-16

RB69-16
IRC: R302.13.

Proposed Change as Submitted

Proponent : Larry Wainright, representing the Structural Building Components Association, representing Structural Building Components Association (lwainright@qualtim.com)

2015 International Residential Code

Revise as follows:

R302.13 Fire protection of floors. Floor assemblies that are not required elsewhere in this code to be fire-resistance rated, shall be provided with a $^{1}/_{2}$-inch (12.7 mm) gypsum wallboard membrane, $^{5}/_{8}$-inch (16 mm) wood structural panel membrane, or equivalent on the underside of the floor framing member. Penetrations or openings for ducts, vents, electrical outlets, lighting, devices, luminaires, wires, speakers, drainage, piping and similar openings or penetrations shall be permitted.

Exceptions:

1. Floor assemblies located directly over a space protected by an automatic sprinkler system in accordance with Section P2904, NFPA 13D, or other approved equivalent sprinkler system.
2. Floor assemblies located directly over a crawl space not intended for storage or fuel-fired appliances.
3. Portions of floor assemblies shall be permitted to be unprotected where complying with the following:
   3.1. The aggregate area of the unprotected portions does not exceed 80 square feet (7.4 m^2) per story
   3.2. Fireblocking in accordance with Section R302.11.1 is installed along the perimeter of the unprotected portion to separate the unprotected portion from the remainder of the floor assembly.
4. ~~Wood floor assemblies using dimension lumber or structural composite lumber equal to or greater than 2-inch by 10-inch (50.8 mm by 254 mm) nominal dimension, or other approved floor assemblies demonstrating equivalent fire performance.~~

Reason:

1. In general, the law states the purpose of a building code is to establish minimum requirements to safeguard the public health, safety, and general welfare, and to provide safety to firefighters and emergency responders during emergency operations. (See 3 Intent) (http://publicecodes.cyberregs.com/icod/irc/2012/icod_irc_2012_1_par003.htm).
2. Underwriters Laboratory (http://ul.com/) (UL) echoed the intent of the law on page 3 of their test report, *Improving Fire Safety by Understanding the Fire Performance of Engineered Floor Systems and Providing the Fire Service with Information for Tactical Decision Making* (http://www.sbcmag.info/sites/sbcmag.info/files/ind_news/2015/10/2012_ul_nist_arra_compilation_improving_ff_safety_performance stating, "The main objective of this study was to improve firefighter safety by increasing the level of knowledge on the response of residential flooring systems to fire. Several types (or series) of experiments were conducted and analyzed to expand the body of knowledge on the impact of fire on residential flooring systems."
3. UL concludes on page 69 of their test report (http://www.sbcmag.info/sites/sbcmag.info/files/ind_news/2015/10/2012_ul_nist_arra_compilation_improving_ff_safety_performance "This research study provides data to substantiate the need to *protect dimensional lumber floor systems* to improve firefighter safety."
4. The Structural Building Components Association (http://www.sbcindustry.com) (SBCA) recently undertook testing at NGC Testing Services (http://www.ngctestingservices.com/fire.html) (NGC), an International Accreditation Service (ICC-IAS) accredited ISO/IEC 17025 ASTM E119 fire testing facility. SBCA chose to test at NGC versus UL so that the SBCA ASTM E119 test procedure and the resulting test data would be an independent verification of floor assembly performance. SBCA testing shows 2x10 floor assembly performance was 10:35 minutes. This result confirms UL testing results (Table 1).

UL and SBCA ASTM E119 100% Design Load Fire Test Data is Aligned – Says Protect Everything

UL ASTM E119, Unprotected Floor Assembly, 100% Design Load Fire Endurance Performance Benchmark Tests

Test Member Recent UL[1] Test Data	UL Test [% design load]	Time of Total Structural Failure	Time of Failure Load Bearing
2x10 Dimension Lumber	UL Data [100%]	7:04 (min:sec)	7:04 (min:sec)
9-1/2" I-Joist	UL Data [100%]	2:20 (min:sec)	2:20 (min:sec)

SBCA ASTM E119, Unprotected Floor Assembly, 100% Design Load Fire Endurance Performance Benchmark Tests

Test Member March 2015 SBCA Test Data	NGC Test [% design load]	Total Applied Load (psf)	Time to Failure (min:sec)
2x10 Southern Pine (16" o.c.)	NGC FC-853 [100%]	42.0	10:35 (min:sec)
12" Trusses no SPs (24" o.c.) (1)	NGC FC-858 [100%]	48.5	6:54 (min:sec)
9-1/2" Flak Jacket I-joist (19.2" o.c.) (3)	NGC FC-855 [100%]	84.0	6:37 (min:sec)
12" Trusses no SP (24" o.c.) (2)	NGC FC-854 [100%]	48.5	6:02 (min:sec)
9-1/2" I-Joist (19.2" o.c.) (4)	NGC FC-855 [100%]	84.0	4:25 (min:sec)
12" Trusses w/SPs (24" o.c.) (2)	NGC FC-856 [100%]	52.3	3:33 (min:sec)

Notes on this table: (1) SP=splice joint & this test had strong-back to bearing. (2) SP=splice joint & this test had strong-back but NOT to bearing. (3) Flak Jacket was ICC-ES ESR -1153 approved 2013 product from market to be sold inventory. ICC-ES approved design values and holes were incorporated. (4) ICC-ES approved design values and holes were incorporated.

Table 1– ASTM E119 Unprotected Floor Assembly Testing at 100% Design Load

5. For more information and details on the reasons that exception 4 should be immediately deleted in any jurisdiction that has adopted this language please visit www.sbcindustry.com/fireprotectionfloors (http://www.sbcindustry.com/fireprotectionfloors).

Cost Impact: Will increase the cost of construction

This proposal will increase the cost of construction when materials falling under the current exception #4 language are used by requiring a minimum 1/2" gypsum wallboard to be installed.

RB69-16 : R302.13-WAINRIGHT13242

Public Hearing Results

Committee Action: **Disapproved**

Committee Reason: The committee believes that dimensional lumber is providing ample time to allow for evacuation of the occupants of a dwelling before floor collapse.

Assembly Action: **None**

Individual Consideration Agenda

Public Comment 1:

Proponent : Larry Wainright, representing Structural Building Components Association (lwainright@qualtim.com); Marvin Strzyzewski, representing MiTek USA, Inc. (marvins@mii.com) requests Approve as Modified by this Public Comment.

Modify as Follows:

2015 International Residential Code

R302.13 Fire protection of floors. Floor assemblies that are not required elsewhere in this code to be fire-resistance rated, shall be provided with a $^{1}/_{2}$-inch (12.7 mm) gypsum wallboard membrane, $^{5}/_{8}$-inch (16 mm) wood structural panel membrane, or equivalent on the underside of the floor framing member as defined by performance equivalent to 26 minutes using ASTM E119 standard fire endurance testing with a superimposed load simulating a maximum load condition (i.e. 100% design load). Penetrations or openings for ducts, vents, electrical outlets, lighting, devices, luminaires, wires, speakers, drainage, piping and similar openings or penetrations shall be permitted.

Exceptions:

1. Floor assemblies located directly over a space protected by an automatic sprinkler system in accordance with Section P2904, NFPA 13D, or other approved equivalent sprinkler system.
2. Floor assemblies located directly over a crawl space not intended for storage or fuel-fired appliances.
3. Portions of floor assemblies shall be permitted to be unprotected where complying with the following:
    3.1. The aggregate area of the unprotected portions does not exceed 80 square feet (7.4 m^2) per story
    3.2. Fireblocking in accordance with Section R302.11.1 is installed along the perimeter of the unprotected portion to separate the unprotected portion from the remainder of the floor assembly.

Commenter's Reason:

WAINRIGHT: The committee reason for disapproval says, " The committee believes that dimensional lumber is providing ample time to allow for evacuation of the occupants of a dwelling before floor collapse". Based on the UL testing submitted with the original proposal, the committee is saying that a time of 7 minutes 4 seconds is sufficient time for the occupants to evacuate. Based on the SBCA testing submitted with the original proposal, trusses installed with strongbacks tied back to the structure, which is a typical detail used in the field, provided 6 minutes 54 seconds of protection. This is a statistically insignificant difference in the times to failure between trusses and 2x10s.

Further, the SBCA testing showed that 2x10 dimensional lumber failed with a complete collapse of the structure, whereas the truss tests were stopped at the 6:54 mark due to deflection in the trusses. The truss system did not collapse into the furnace as shown by the following picture post ASTM E119 test:

Furthermore, UL's 2012 report (Underwriters Laboratory report (link is external) (http://ul.com/), http://www.globalfireresearch.com/reports/research/download/125_470e3478d56e271c69124678a9941298 (http://www.globalfireresearch.com/reports/research/download/125_470e3478d56e271c69124678a9941298)) provides affirmation that R302.13 should be changed as recommended as follows:

Section 7.1 Starting at Bottom of Page 51 and all of Page 52 for context

All of these experiments were started with a flaming ignition. The average collapse times of all of the engineered floor systems were prior to the arrival of the fire service with the 50th percentile response time of 5 minutes (9 minutes total including 4 minutes to begin the response). All of the engineered floor system experiments, including the maximum times to collapse occurred prior to the arrival of the 90th percentile response time of 11 minutes (15 minutes total including 4 minutes to begin the response). The average collapse time of the dimensional lumber floor system experiments also occurred at the time of the arrival of the fire service with the 90th percentile response which emphasizes the importance of protecting all types of flooring systems, including dimensional lumber. Regardless of the unprotected floor system type no factor of safety can be assumed, doubling the average collapse time of all of these experiments still results in a collapse time that could occur within the operational timeframe of any fire department with any response time. It is important to note that these times are when the fire service would arrive to begin their operations, not the time it takes to mitigate the incident.

UL states the following on page 67:

9. Summary of Findings:

Basement fires are challenging and dangerous. Firefighters can be in a position where they are operating above the fire and in some cases without knowing it. When above a basement fire with an unprotected wood floor assembly a number of challenges exist. Often the fire service has no idea how long the fire has been burning, no information on the type of floor system and no means of assessing the structural integrity of the floor system. There are little if any warning signs of collapse so it is very important to understand the hazards associated with a basement fire because the consequences of falling through a floor into a basement fire are pinnacle. To increase fire fighter safety UL accomplished several objectives with this research project.

UL states the following on page 3 & 68 on collapse times and page 64 section 8.1 on "exception 4" as follows:

- Collapse times of all unprotected wood floor systems are within the operational time frame of the fire service regardless of response time.

Based on the collapse times from these experiments there is little to no safe operating time for firefighters in a structure with an unprotected dimensional lumber floor system.

dimensional lumber even though its dimensions were actually smaller. While the fire service suggests that the factor of safety provided by older dimensional lumber was acceptable the experimental results show that new dimensional lumber is significantly different in terms of performance under fire conditions. Protecting the dimensional lumber as well as engineered lumber floor systems in future code requirements would eliminate this fire performance change in dimensional lumber and provide a more reasonable factor of safety for the fire service.

Finally, UL states the following with respect to the wording of equivalence (i.e. ...or equivalent on the underside of the floor framing member.....) on page 65:

65 | Page

8.2. Equivalence

Another code implication is the definition of "equivalent" as used in the following section, "*Floor assemblies, not required elsewhere in this code to be fire resistance rated, shall be provided with a ½ inch gypsum wallboard membrane, 5/8 inch wood structural panel membrane, or equivalent on the underside of the floor framing member.*" Two different products, utilizing two different technologies, were tested to see if they provide equivalent protection to an engineered floor system with ½ in. gypsum wallboard. The benchmark for this equivalency is interpreted to be approximately 26:45 which is the approximate performance of the three engineered floor systems experimented with ½ in. gypsum board protection (Table 26).

Table 26. Collapse times of engineered floor systems with protection technologies

Assembly	Protection	Collapse Time
Engineered I joist (12 inch deep)	None	6:00
Engineered I joist (12 inch deep)	1/2 inch regular gypsum wallboard	26:45
Parallel chord truss with steel gusset plate connections (14 inch deep)	1/2 inch regular gypsum wallboard	29:15
Parallel chord truss with glued connections (14 inch deep)	1/2 inch regular gypsum wallboard	26:45
Engineered I joist (12 inch deep)	Spray applied fire retardant coating	8:40
Engineered I joist (12 inch deep)	Spray applied intumescent coating	17:50

This evidence, which was not available when the current provisions were written, clearly show that the code as written increases the risk of life safety to firefighters and emergency responders, when unprotected 2x10s are used. As UL clearly states, the consequences of falling through the floor into a basement fire are pinnacle. Currently the code language expectation is a 15-minute membrane and as UL states this should result in roughly 26 minutes of performance.

Since 1992 it has been well known that unprotected 2x10s perform in the 10-minute range or less.

Given all the facts that have been known and the above set of facts, when the first firefighter falls through a 2x10 or any other non-26-minute performing floor into a basement fire and is severely burned or dies, what will the ICC body of code development decision maker's answer for this be?

The simple act of including 1/2" gypsum on all floor assemblies removes this question and all the risk attached to this code provision.

STRZYZEWSKI: Modifying the section (R302.13 Fire protection of floors) that includes a reference to a nationally approved test method and time limit for a successful fire test would allow for the original change to this section by providing users with specific direction on how to accomplish the required equivalency.

RB69-16

RB70-16
IRC: R303.3.

Proposed Change as Submitted

Proponent : Anthony Floyd, Energy Code Specialist, City of Scottsdale, representing City of Scottsdale (afloyd@scottsdaleaz.gov)

2015 International Residential Code

Revise as follows:

R303.3 Bathrooms. Bathrooms, water closet compartments and other similar rooms shall be provided with aggregate glazing area in windows of not less than 3 square feet (0.3 m^2)~~, one-half of which must~~ . A local exhaust system shall be ~~openable~~ provided in accordance with Section M1507. Exhaust air from the space shall be discharged directly to the outdoors.

Exception: The glazed areas shall not be required where artificial light ~~and a local exhaust system are~~ is provided. ~~The minimum local exhaust rates shall be determined in accordance with Section M1507. Exhaust air from the space shall be exhausted directly to the outdoors.~~

Reason: Both intermittent and continuous bathroom exhaust systems reduce the risk of mold growth which is a significant health concern in homes. They are far more effective at removing moisture and odor than an operable window that is usually left closed during the winter and summer months of the year.
During a bath or shower, the humidity level in a bathroom can be a perfect breeding ground for mold, mildew and microorganisms that can impact health. Excess moisture has tremendous potential for damaging a home. It cracks and peels paint, ruins gypsum wallboard, causes exterior paint failure, warps doors and rusts cabinets and fixtures. Without control, it can even cause deterioration of joists and framing. As it condenses on windows, walls, ceilings and cabinets, it attracts dirt. It encourages mildew on tile grout and generally provides an environment for increased bacterial growth that is unsanitary and unhealthy for occupants. Bathroom exhaust fans are therefore an essential means for removing excess moisture and odor.

Bibliography: Home Ventilating Institute - http://www.hvi.org/publications/HowMuchVent.cfm
GreenCodePro/CALGreen - http://greencodepro.com/code-summaries/california-green-building-standards-code/4-506-1-bathroom-exhaust-fans

LEED for Homes Reference Guide, 2008. p. 301-302.

Cost Impact: Will increase the cost of construction
Exhaust fan costs range from $14 for a basic 50 cfm unit to $128 for a 80 cfm unit with integrated light, humidity sensor control, adjustable speed, and quiet sound rating. The minimum cost for a roof vent kit with flex duct is $23. Bathroom exhaust fans minimize the potential for building damage, saving the cost of making repairs to correct problems that could have been easily avoided.

RB70-16 : R303.3-FLOYD3604

Public Hearing Results

Committee Action: **Disapproved**

Committee Reason: The cost impact statement is inaccurate. The proposal does not address or provide an exception for climates where windows might be open or nonexistent. The proposal may create an opportunity where there is not an operable window in a bathroom by eliminating the requirement for it. This may be more appropriate in specific climates rather than nation-wide.

Assembly Action: **None**

Individual Consideration Agenda

Public Comment 1:

Proponent : Anthony Floyd, Energy Code Specialist, City of Scottsdale, representing City of Scottsdale (afloyd@scottsdaleaz.gov) requests Approve as Modified by this Public Comment.

Modify as Follows:

2015 International Residential Code

R303.3 Bathrooms. Bathrooms, water closet compartments and other similar rooms shall be provided with aggregate glazing area in windows of not less than 3 square feet (0.3 m^2). ~~A local exhaust system~~ Bathrooms with a shower or tub shall be provided with a local exhaust system in accordance with Section M1507. ~~Exhaust air from the space shall be discharged directly to the outdoors.~~

Exceptions:

~~**Exception:**~~1. The glazed areas shall not be required where artificial light is provided.

2. A local exhaust system shall not be required for bathrooms provided with an openable window of not less than 1.5 square feet (0.15 m^2) and where the dwelling unit is not required to be provided with a mechanical ventilation system in accordance with Section R303.4.

Commenter's Reason: The committee's reason for disapproval is that the proponent's cost impact is inaccurate. This reason is based on faulty testimony. The fact is that exhaust fan costs range from (1) $14.48 (Nutone retail at Home Depot) for a 50 cfm unit to (2) $34.97 (Broan retail at Lowes) for a 50 cfm unit with integral light and quiet sound rating to (3) over $50 depending on cfm rates, humidity sensors, adjustable speeds and lower sound ratings. The minimum cost for a vent kit with flex duct range from $17.96 to $24.98 (retail).

The second committee reason for disapproval was that the code change would eliminate the requirement for an openable window. Under the current code, an openable window is not required when an exhaust fan is provided. This code change modification would require an exhaust fan in bathrooms containing a shower or tub with an exception for bathrooms provided with an openable window and where dwelling units are not required to be provided with a mechanical ventilation system per Section R303.4. This exception also addresses testimony with respect to naturally ventilated buildings in climates that rely on non-mechanical means of ventilation. Otherwise, the code change would require an exhaust fan to be provided as the primary means of moisture removal.

Both intermittent and continuous bathroom exhaust systems are far more effective at removing moisture and odor in comparison to an openable window in a mechanically ventilated building. The removal of moisture by window openings is unpredictable and unreliable. It depends on seasonal, daily and hourly temperature, humidity and air pressure differences between indoor and outdoor conditions including wind direction.

Bathroom exhaust fans can minimize the potential for building damage, saving the cost of making repairs to correct problems that could have been easily avoided. Just as a kitchen exhaust fan is far more effective at removing fumes and odors in comparison to an open window, so is a bathroom exhaust fan in removing moisture. All other points made in the original Reason Statement remain applicable to this Public Comment.

RB70-16

RB72-16
IRC: R303.4.

Proposed Change as Submitted

Proponent : Mike Moore (mmoore@newportventures.net)

2015 International Residential Code

Revise as follows:

R303.4 Mechanical ventilation. ~~Where the air infiltration rate of a *dwelling unit* is 5 air changes per hour or less where tested with a blower door at a pressure of 0.2 inch w.c (50 Pa) in accordance with Section N1102.4.1.2, the *dwelling unit*~~ *Dwelling units* shall be provided with ~~whole-house~~ mechanical ventilation in accordance with Section ~~M1507.3~~ M1507.

Exception: Mechanical ventilation is not required for dwelling units where at least one of the following conditions is met:
1. The building does not have mechanical cooling and it is in Climate Zone 1 or 2
2. The building is intended to be thermally conditioned for less than 876 hours per year.

Reason: Summary

Based on data from a recent study by Lawrence Berkeley National Laboratory[1], homes built after 2000 are generally too tight to provide adequate ventilation air through infiltration (i.e., 0.35 natural air changes per hour cannot be met with homes as leaky as 8 ACH_{50}; see chart below). Since that time, homes have become even tighter, with greater attention given by codes and industry to improve air sealing, save energy, and improve occupant comfort. Over 90% of new single family starts are now required to follow the prescriptive air sealing requirements of the 2009 IECC or later, which easily results in an air tightness level of 5 ACH_{50} or lower (e.g., an average of < 0.2 natural air changes per hour across 8 climate zones for a typical 2 story house), yet about 70% of these homes have no requirement for mechanical ventilation.[2] Tight homes are clearly standard practice at this point in time, regardless of whether or not a blower door test is conducted. The requirement for mechanical ventilation should also be standard practice, especially because studies have shown that occupants do not open windows frequently enough to provide minimum indoor air quality, largely due to concerns for security and/or comfort.[3,4] The total incremental cost for adding mechanical ventilation is as low as $70 based on retail equipment pricing for an ENERGY STAR exhaust fan. This is very small cost when compared to the estimated $300 billion annual cost of negative health effects from poor residential IAQ.[5,6,7,8,9]

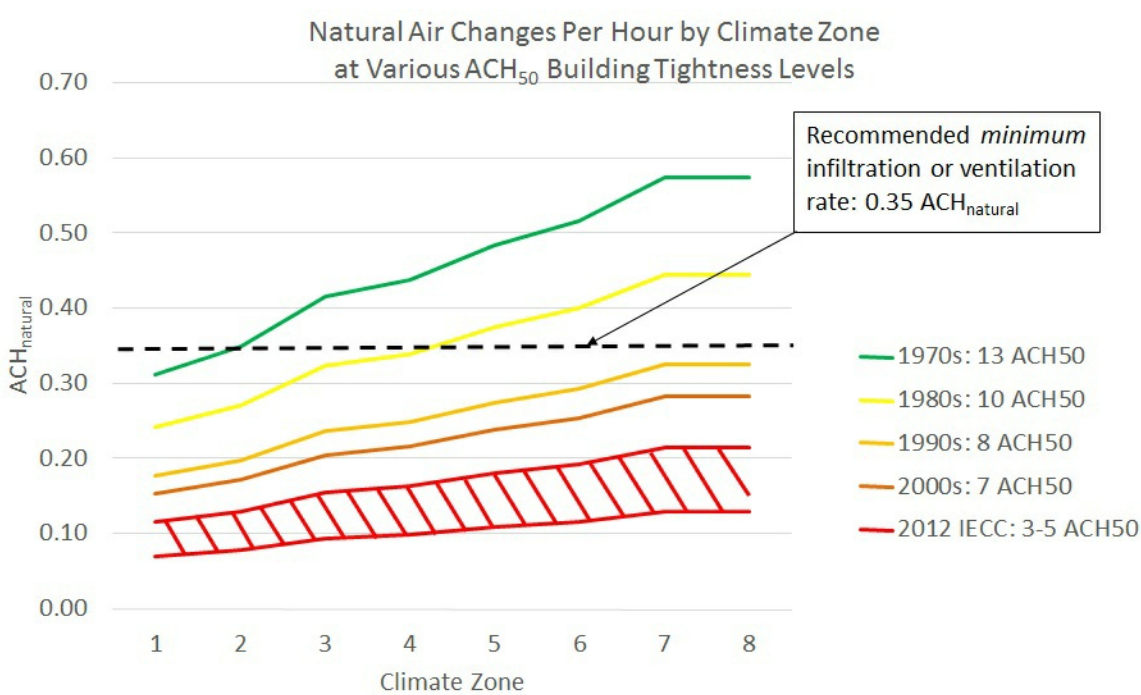

Assumptions: 2000 square foot, 2-story single family detached home with 8 foot ceilings. Pressure exponent, n, equals 0.65. Representative cities for climate zones: 1 (Miami), 2 (Houston and Phoenix), 3 (Atlanta, Los Angeles, Las Vegas, San Francisco), 4 (Baltimore, Albuquerque, Seattle), 5 (Chicago, Boulder), 6 (Minneapolis, Helena), 7 (Duluth), and 8 (Fairbanks). $ACH_{natural}$ was calculated using equations from ASHRAE 62.2. Data from 1970s to 2000s were derived by applying these assumptions to the normalized leakages determined by Chan et al., Figure 4.

Tight Dwelling Units are Now Standard Practice in at Least 90% of New Construction

Experience from decades of work with builders confirms that achieving a home air tightness of less than 5 ACH_{50} is not difficult if the builder just addresses the "big holes" during construction – those mandated by the 2009 air sealing provisions of the IECC and applicable to over 90% of new construction.[10] Similarly, feedback from building officials and HERS raters have confirmed that following the 2009 IECC air sealing checklist is all that is necessary to achieve building tightness below 5 ACH_{50} (and regularly below 3 ACH50). Following are some examples of this testimony from internet threads, studies, and personal communications:

- Parker, CO: From 2013-2014, only three of the first 424 air tightness tests conducted on single family homes built by production builders in Parker, CO, failed to achieve 3 ACH_{50}, with an average score of 2.3 ACH_{50}. According to the building official, this level of tightness was achieved by simply following the same air tightness checklist that was in the 2009 IECC.[11]
- California homes built from 2002-2004: Testing of a random sample of 102 tract homes built in California between 2002-2004 (well before the detailed air sealing requirements of the 2009 IECC were developed) showed a median air tightness of 4.8 ACH_{50}.[3]
- HERS rater in Illinois: "In my experience with testing homes in new construction, the 5 ACH_{50} is too easy to achieve. I find that the builders don't have to try very hard to get under 5 ACH_{50}. What I find most disheartening is that they can pass code (5 ACH_{50} in Illinois) with a blower door test and not do any attic air sealing or properly seal rim joists - which would be my top priorities in most homes. I had a recent test where I walked away shaking my head. There were the usual suspects that I find with a leaky attic floor - no top plates sealed, leaky recessed lights, unsealed electrical penetrations, etc. Yet, they easily achieve the 5 ACH_{50}."[12]
- Largest HERS Rater in Colorado: "Colorado has had good success in achieving 3 or less ACH_{50} consistently. We see a consistent average of 2.5 ACH_{50} for single family homes. Following the air tightness table in the code..., well is the issue to achieve this. How well builders follow this guidance is directly relational to their ability to meet the 3 ACH_{50} threshold."[13]
- Builder in Illinois: "Our interest in the 1990's and early 2000's was more driven by reduced homeowner "cold room" complaints than energy compliance. But with that said, we did, inadvertently, start to build a more energy efficient home and thereby had a happier customer base and referral stream... It was not hard to get to 5 ACH_{50} at all. But never being required to measure the tightness level of our homes prior to 2010, ... I went back a tested a sampling of homes we had built in the past 10 years to pleasantly find most were testing right at or below 5 ACH_{50}."[14]
- Habitat for Humanity affiliate's experience: "If a habitat for humanity affiliate can make 5 ACH_{50} with different volunteers on each house, and that means retraining them for every build; I think a commercial builder that tells all subs his homes are going to be tested and will hit 5 or lower; is easy. This affiliate builds in a No Energy Code jurisdiction and looks for building tasks their volunteers can do. They turn down donations of site applied spray on WRB to allow their volunteers to install house wrap."[15]
- HERS rater in Colorado: "Based on the experience of the contractors we are working with 5 should be a no brainer and 3 should come with a few attention to details. Most of our contractors are consistently at 2 or better and many are at 1."[16]
- HERS rater in Kansas: "I did a brief study for our local HBA as they were working with the code officials and found most builders were at 6 ACH before implementation of the 2012 code air sealing requirements. Now most homes build to the code are under five with the larger homes under three as a general rule."[17]
- Program manager in Alaska: "The average ACH_{50} for homes built in Alaska since 2000 (all types) 3.93; Average ACH_{50} for homes built in Alaska since 2006 (all types) 3.37; Average ACH_{50} for homes built in Alaska since 2010 (all types) 2.96."[18]
- Builder from Washington: "Our worst blower-door test ever was our first, back in 2005. It came in at just under 2.5 ACH_{50}, and we didn't even know what a tight house was back then."[19]

Building Tight without Mechanically Ventilating Can Have Huge Health Impacts

Building tight (e.g., 5 ACH50 and below) has become the new standard practice across 90% of the single family starts across the country, regardless of whether or not a builder confirms the tightness with a blower door test. Of course, the one potential problem with building tight is the negative impact it has on indoor air quality if mechanical ventilation is not provided. Without mechanical ventilation, tight homes can experience elevated humidity levels; increased condensation potential on windows; higher concentrations of dust mites and allergens; and higher concentrations of pollutants such as particulate matter (which can be transmitted to the circulatory system and organs after being introduced to the lungs), radon (the second leading cause of lung cancer), chloroform, formaldehyde, acetaldehyde, and other VOCs that have negative health impacts.

We spend 90% of our time indoors, so it's no wonder that health impacts associated with poor indoor air quality include increased risk or exacerbation of asthma, stroke, neurotoxicity, and cancer, among others.[5,20,21] Many indoor air pollutants originate from building materials and finishes. Recent studies have shown that air pollution levels in dwelling units that are not mechanically ventilated can exceed outdoor national air quality standards for CO and NO_2 in 7-8% and 55-70% of homes,

respectively, during a typical week.[22] Other sources point to the increase in flame retardants in building materials and finishes driven by codes and standards as contributing to the presence of these chemicals in indoor dust and air and ultimately in the bodies of people (33 different flame retardants products have now been discovered in people's bodies; health effects of many of these are still largely unknown).[23]

Estimates for the cost of poor indoor air quality are staggering. The cost of asthma triggered by dampness and mold in U.S. residences has been estimated at $3.5 billion annually[24], and asthma now affects one in five Americans[25]. Even when you exclude radon and second hand smoke from the list of indoor pollutants, poor indoor air quality in U.S. residences is estimated to account for 14% of all years of life lost and years of disability associated with "noncommunicable and nonpsychiatric diseases."[5] Other studies estimate that the total costs associated with negative health effects of poor indoor air quality in U.S. residences exceeds $300 billion annually, which is over 10% of our nation's annual health care costs.[5,6,7,8,9]

Bibliography:

1. Chan et al. (2013). Analysis of air leakage measurements of US houses. Energy and Buildings: 66(2013):616-625.

2. States/jurisdictions that do not have a mechanical ventilation requirement include all of those that are currently enforcing the 2009 IECC. Percentages of new starts in states/jurisdictions that have adopted the 2009 IECC and the 2012 IECC were developed from the following sources:

State data: U.S. DOE Building Energy Codes Program, "Status of State Energy Code Adoption, Residential: Current" accessed from http://www.energycodes.gov/adoption/states (http://www.energycodes.gov/adoption/states) on Dec 3, 2014.

State data: ICC, "International Codes – Adoption by State (September 2014)" accessed from http://www.iccsafe.org/gr/Documents/stateadoptions.pdf (http://www.iccsafe.org/gr/Documents/stateadoptions.pdf) on Dec 3, 2014.

Jurisdictional data: Building department websites of various jurisdictions.

2014 housing starts: National Association of Home Builders Total Housing Starts Forecast, October 2014.

3. Offerman, F.J. (2009). Ventilation and indoor air quality in new homes. PIER Collaborative Report. California Energy Commission & California Environmental Protection Agency Air Resources Board.

4. Klug, V. L., Lobscheid, A. B., & Singer, B. C. (2011). Cooking Appliance Use in California Homes – Data Collected from a Web-Based Survey LBNL-5028E. Berkeley, CA: Lawrence Berkeley National Laboratory.

5. Logue JM, Price PN, Sherman MH, and Singer BC. 2012. A Method to Estimate the Chronic Health Impact of Air Pollutants in U.S. Residences. Environmental Health Perspectives 120(2): 216-222.

6. Turner WJN, Logue JM, and Wray CP. 2012. Commissioning Residential Ventilation Systems: A Combined Assessment of Energy and Air Quality Potential Values.

7. Brown DW. 2008. Economic value of disability-adjusted life years lost to violence: estimates for WHO Member States. Rev. Panam Salud Publica, 24, 203-209.

8. Lvovsky K, Huges G, Maddison D, Ostro B, and Pearce D. 2000. Environmental costs of fossil fuels: a rapid assessment method with application to six cities. Washington,D.C.: The World Bank Environment Department.

9. Highfill T and Bernstein E. 2014. Using Disability Adjusted Life Years to Value the Treatment of Thirty Chronic Conditions in the U.S. from 1987-2010. U.S. Department of Commerce Bureau of Economic Analysis WP 2014-9.

10. Lstiburek, J.W. (2011). Just right and airtight. ASHRAE Journal: 53(5): 58-66.

11. Email communication with Gil Rossmiller, Chief Building Official, Parker, CO. Dec 8, 2014.

12. Email communication with Todd Abercrombie, EverGreen Home Energy Consultants, Inc. Dec 8, 2014.

13. Comment from Robby Schwarz, Principal of Energy Logic. Posted on LinkedIn's RESNET.US Group discussion, "How Tough is it to Hit 5 ACH_{50}?" Dec 10, 2014.

14. Email communication with Brian Flaherty of Flaherty Buiders. Dec 4, 2014.

15. Comment from John Nicholas, HERS Rater with The Energy Guy. Posted on LinkedIn's RESNET.US Group discussion, "How Tough is it to Hit 5 ACH_{50}?" Dec 9, 2014.

16. Comment from Mark Attard, Sales Consultant at AE Building Systems. Posted on LinkedIn's RESNET.US Group discussion, "How Tough is it to Hit 5 ACH_{50}?" Dec 9, 2014.

17. Comment from Bruce Chyka, Owner at Performance Plus Homes. Posted on LinkedIn's RESNET.US Group discussion, "How Tough is it to Hit 5 ACH_{50}?" Dec 9, 2014.

18. Comment from Nathan Wiltse, Policy Program Manager / Building Economist at Cold Climate Housing Research Center. Posted on LinkedIn's RESNET.US Group discussion, "How Tough is it to Hit 5 ACH_{50}?" Dec 10, 2014.

19. Comment from Ted Clifton, President of Zero Energy Plans. Posted on LinkedIn's RESNET.US Group discussion, "How Tough is it to Hit 5 ACH_{50}?" Dec 10, 2014.

20. ASHRAE. 2009. Indoor air quality guide. American Society of Heating Refrigerating and Air Conditioning Engineers, Inc. ISBN 978-1-933742-59-5.

21. Anderson, E.L. and Albert, R.E. (1999). Risk assessment and indoor air quality. Lewis Publishers, New York, NY.

22. Singer et al. (2014). Pollutant exposures from natural gas cooking burners: a simulation based assessment for Southern California." Lawrence Berkeley National Laboratory. LBNL-6712E.

23. Dedeo, M. & S. Drake. (2014). Healthy Environments: Strategies for Avoiding Flame Retardants in the Built Environment. Available at: http://perkinswill.com/sites/default/files/PerkinsWill_FlameRetardantAlternatives.pdf (http://perkinswill.com/sites/default/files/PerkinsWill_FlameRetardantAlternatives.pdf). Accessed December 11, 2014.

24. Mudarri, D. and W.J. Fisk. (2007). Public health and economic impacts of dampness and mold. Indoor Air 17:226-235.

25 Asthma and Allergy Foundation of America. "Asthma Facts and Figures" accessed from https://www.aafa.org/display.cfm?sub=42&id=8#_ftn1 (https://www.aafa.org/display.cfm?sub=42&id=8#_ftn1) on Dec 3, 2014.

Cost Impact: Will increase the cost of construction
The incremental cost increase is estimated at ~$70. Costs associated with poor residential indoor air quailty in the U.S. are estimated at over $300 billion annually.[5,6,7,8,9]

RB72-16 : R303.4-MOORE11064

Public Hearing Results

Committee Action: **Disapproved**

Committee Reason: This proposal removes options from the code. The energy code seems to be pushing us to the point where we may soon be required to have mechanical ventilation. The proposal is too specific in that you must have it and doesn't give enough leeway for areas where you do not want it or it isn't necessary.

Assembly Action: **None**

Individual Consideration Agenda

Public Comment 1:

Proponent : Mike Moore, Newport Ventures, representing Broan-NuTone (mmoore@newportventures.net) requests Approve as Modified by this Public Comment.

Modify as Follows:

2015 International Residential Code

R303.4 Mechanical ventilation. *Dwelling units* shall be provided with mechanical ventilation in accordance with Section M1507.

Exception: ~~Mechanical~~ Whole-house mechanical ventilation is not required for dwelling units ~~where at least one of the following conditions is met:~~
~~1. The building does not have mechanical cooling and it is~~ in Climate Zone 1 or 2
~~2~~ that do not have mechanical cooling. ~~The building is intended to be thermally conditioned for less than 876 hours per year.~~

Commenter's Reason: The committee's reason for disapproval of the original proposal was that, "This proposal removes options from the code. The energy code seems to be pushing us to the point where we may soon be required to have mechanical ventilation." A closer read of the code by the committee would have revealed that compliance with the energy code since 2012 has resulted in a requirement for mechanical ventilation (see IECC R402.4.1.2 and R403.6; IRC R303.4; and IMC 401.2). The original proposal simply clarified this requirement and removed confusion. The original proposal's rationale, which is still valid, provides an extensive argument as to why new dwelling units are tight dwelling units that need mechanical ventilation regardless of whether or not a blower door test is performed. Additionally, a recent DOE field study of homes[1] built to be compliant with the 2009 IECC air tightness requirements (NO BLOWER DOOR REQUIRED BY CODE) found that the average building air tightness of 470 sampled homes across 7 states in Climate Zones 2-5 was 4.8 ACH50. In other words, dwelling units complying with the prescriptive air sealing checklist in the 2009 and later versions of the IECC were found to test out below 5 ACH50 on average. Finally, the IECC committee approved RE58 in Louisville with the reason statement that "5 ACH is not a problem to achieve."

New, energy efficient construction is by nature tight construction and should be provided with mechanical ventilation to ensure that occupants have the ability to access MINIMUM acceptable indoor air quality.

Finally, this comment introduces reasonable exceptions to the requirements for whole house mechanical ventilation that have existed since 2012 for any dwelling unit that complies with the IECC, IRC, and IMC.

Bibliography: 1. DOE Residential Field Study Dataset. Available at https://www.energycodes.gov/residential-energy-code-field-study. Accessed 7/18/2016.

RB72-16

RB79-16
IRC: R308.4.2.

Proposed Change as Submitted

Proponent : Stephen Thomas (sthomas@coloradocode.net)

2015 International Residential Code

Revise as follows:

R308.4.2 Glazing adjacent to doors. Glazing in an individual fixed or operable panel adjacent to a door shall be considered to be a hazardous location where the bottom exposed edge of the glazing is less than 60 inches (1524 mm) above the floor or walking surface and it meets either of the following conditions:

1. Where the glazing is within 24 inches (610 mm) of either side of the door in the plane of the door in a closed position.
2. Where the glazing is on a wall ~~perpendicular to~~ not in the plane of the door in a closed position and within 24 inches (610 mm) of the hinge side of an in-swinging door.

   Exceptions:

   1. Decorative glazing.
   2. Where there is an intervening wall or other permanent barrier between the door and the glazing.
   3. Where access through the door is to a closet or storage area 3 feet (914 mm) or less in depth. Glazing in this application shall comply with Section R308.4.3.
   4. Glazing that is adjacent to the fixed panel of patio doors.

Reason: The current language creates the potential of creating a condition where safety glazing is required if the requirements are read literally. The way that the section is written, it only applies to glass that is within the same plane as the door and perpendicular to plane of the door. If it is anything other than those two locations, it is unclear what is required. For example if the glazing is in a wall that is 45º from the face of the door, neither requirement would apply. This proposal attempts to clear up this confusion. It changes the perpendicular wall to any wall not in the same plane as the door. Therefore, the example discussed above would require that it comply with item #2.

Cost Impact: Will not increase the cost of construction
This proposal is a clarification and therefore would not change the cost of construction.

RB79-16 :
R308.4.2-
THOMAS11440

Public Hearing Results

Committee Action: **Approved as Submitted**

Committee Reason: This clarifies the requirements of the code.

Assembly Action: **None**

Individual Consideration Agenda

Public Comment 1:

Proponent : Jonathan Siu, representing City of Seattle Department of Construction and Inspections (Jon.Siu@seattle.gov) requests Approve as Modified by this Public Comment.

Modify as Follows:

2015 International Residential Code

R308.4.2 Glazing adjacent to doors. Glazing in an individual fixed or operable panel adjacent to a door shall be considered to be a hazardous location where the bottom exposed edge of the glazing is less than 60 inches (1524 mm) above the floor or walking surface and it meets either of the following conditions:

1. Where the glazing is within 24 inches (610 mm) of either side of the door in the plane of the door in a closed position.
2. Where the glazing is on a wall ~~not in~~ less than 180 degrees from the plane of the door in a closed position and within 24 inches (610 mm) of the hinge side of an in-swinging door.

   Exceptions:

   1. Decorative glazing.
   2. Where there is an intervening wall or other permanent barrier between the door and the glazing.
   3. Where access through the door is to a closet or storage area 3 feet (914 mm) or less in depth. Glazing in

this application shall comply with Section R308.4.3.

4. Glazing that is adjacent to the fixed panel of patio doors.

Commenter's Reason: This public comment clarifies when safety glazing is required for an in-swinging door. The original requirement was introduced into the 2015 IRC through code change proposal RB111-13. Based on the figures included in the reason statement (one of which is reproduced below) and the discussions on the proposal, our understanding is the concern being addressed by this provision is that a person can get pinned between the door and the wall, forcing the person against the glazing. The requirement safety glazing in this particular provision is not to address trip/fall/slip hazards, else it wouldn't only be required on the hinge side of the in-swinging door as shown in the figure for RB111-13.

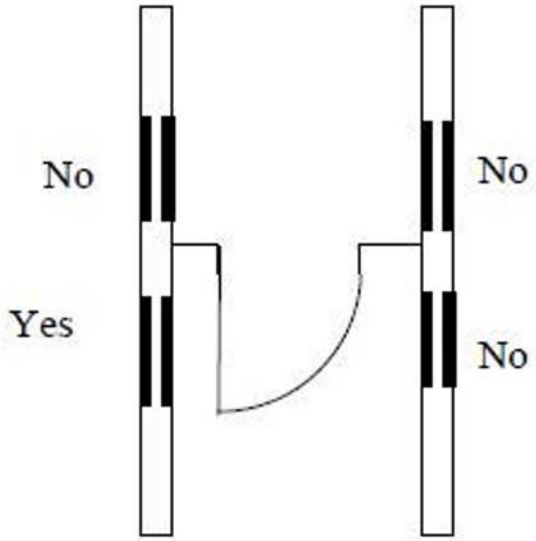

However, this proposed change can be interpreted to apply to situations where there is no danger of pinning a person between the door and the window. The figure below illustrates a situation where the wall bends away from the hinge side of the door. In this case, the door swing will be limited by the hinges and the walls, and there is no hazard from the door, but given the text of this proposal only refers to "not in the plane" of the door, safety glazing would be required in the window as shown.

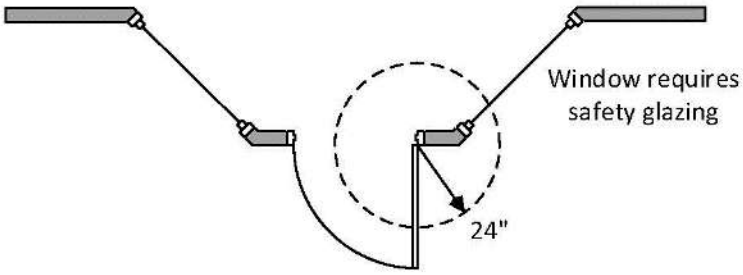

The proposed modification will clarify that only if the window is in a position where a person can get pushed against the window by a door, will safety glazing be required.

The change to the exceptions is purely editorial. As the text appeared in the 2015 IRC, it is unlcear if the exceptions only apply to Item 2. cdpACCESS accentuates the appearance by further indenting the exceptions. The context of the exceptions makes it clear they apply to both Items 1 and 2. The change is only to remove the indent, to clarify the exceptions apply to both items in this section.

RB79-16

RB81-16
IRC: R308.4.4.1 (New).

Proposed Change as Submitted

Proponent : Lee Kranz, City of Bellevue, WA, representing Washington Association of Building Officials Technical Code Development Committee (lkranz@bellevuewa.gov)

2015 International Residential Code

Add new text as follows:

R308.4.4.1 Structural glass baluster panels. Guards with structural glass baluster panels shall be installed with an attached top rail or handrail. The top rail or handrail shall be supported by a minimum of three glass baluster panels, or shall be otherwise supported to remain in place should one glass baluster panel fail.

Exception: An attached top rail or handrail is not required where the glass baluster panels are laminated glass with two or more glass plies of equal thickness and of the same glass type.

Reason: Reason: This proposal will clarify and align the IRC and IBC requirements for glass panels that are used as a structural component in a guard. Imperfections in glass can cause it to fail at loads that are well below its nominal resistance value. We believe the intent of the IBC requirements is to have something (a top rail or a handrail at stairs) to provide some additional fall protection for a person leaning on the guard, should a glass panel fail. Having a handrail attached to at least 3 panels also provides some backup support if a panel fails while someone is grabbing the handrail to prevent a fall. However, there is an exception that allows glass-only guards (without an attached top rail or handrail) if the balusters are laminated glass. The laminated glass provides some backup against total panel failure, but note that the entire glass baluster still has to be designed to be able to support the full loads for guards, as specified in Table R301.5, including using a factor of safety of 4 found in footnote "h".
We believe the IRC should also have these critical safety requirements, which it currently does not.

The proposed code text is consistent with, but not identical to the IBC text (Section 2407.1.2). However, we believe this more clearly states the requirements, and have submitted a parallel amendment for the IBC.

Cost Impact: Will not increase the cost of construction
This change creates consistency with the IBC for glass guards only and allows for more safety and flexibility in design. There should be no increase in the cost.

RB81-16 :
R308.4.4-
KRANZ11180

Public Hearing Results

Committee Action: **Approved as Submitted**

Committee Reason: This proposal aligns with the IBC and allows more options for handrails and guardrails while maintaining a level of safety.

Assembly Action: **None**

Individual Consideration Agenda

Public Comment 1:

Proponent : David Cooper, representing Stairbuilders and Manufacturers Association (coderep@stairways.org) requests Approve as Modified by this Public Comment.

Modify as Follows:

2015 International Residential Code

R308.4.4.1 Structural glass baluster panels. Guards with structural glass baluster panels shall be installed with an attached top rail or handrail. The top rail or handrail shall be ~~supported by a minimum of three glass baluster panels, or shall be otherwise~~ supported to remain in place should one glass baluster panel fail.

Exception: An attached top rail or handrail is not required where the glass baluster panels are laminated glass with two or more glass plies of equal thickness and of the same glass type.

Commenter's Reason: Residences often have return guards or guard sections that cannot fit 3 panels or may have

intermittent posts of another material supporting the rail or a rail may terminate in a connection to a wall. The deleted language is unnecessary to achieve the intent of the proponent, will cause inconsistent interpretation and will create confusion in enforcement.

Proponent : David Cooper, representing Stairbuilders and Manufacturers Association (coderep@stairways.org) requests Disapprove.

Commenter's Reason: The reason top rails on glass panel guard systems were addressed in the IBC was related to a concern for the exposure to falling glass in stadiums and assembly areas. That is why the exception is there because the type of glass mentioned in the exception does not break apart but stays intact when it fails. (Actually the exception was the reason for the requirement to promote the use of this kind of glass.) This type of exposure is minimal in residential applications where stadium crowds are not assembled below a guard. Nor is it possible to have the crowds and traffic concerns related to commercial and public spaces in a one or two family dwelling that would typically be necessary to cause this type of guard to fail.

No justification for this level of safety, or this over restrictive regulation has been cited in the proponents reason. Not one incident or accident nor any statistical injury data is cited. The proponents soul reason is because the IRC should be consistant with the IBC. By his own statement, however he did not submitt the IBC language but rather language that he hopes he can get the IBC to accept in 2021. The IRC is a stand alone code because one and two family residences are recognized as being uniquely different. There are a lot of things that need not be coordinated between IBC and IRC. This is one of them.

These glass guard systems work without rails and are safer without them. They can consist of only a channel secured to the floor system and the glass panels. The panels are fixed in the channel. Or there may be only vertical supports to which the glass panels are attached. Each Panel is designed to meet the 800 pound load, 200 pounds live load times a safety factor of 4 that is applied to the top of the guard.

If a top rail is added the glass panels become infill and need only be designed to meet the 50lb/ft^2 live load. If the top rail , typically of wood or metal the guard system need only be engineered for 500lbs, 200lb times a safety factor of 2.5, making the guard less safe and NO where near as safe as the system designed to resist 800 lbs. applied directly to the top of the glass in a railing system without a top rail.

I must remind you that a handrail is only required on one side of residential flights. Due to glass machining requirements and special connectors/fittings, adding a required top rail or handrail to any glass system can be significantly more expensive than a simple wall mounted option on the side of the stair opposite the guard. The cost increase would again be significant on guards at elevated level surfaces and ramps. Providing thee panels where only one is needed greatly increases the edge polishing, cutting and machinning requirements. Any of these required changes would add days to typical residential installation time escalating the project cost bu thousands of dollars. This overrestrictive regulation will stiffle such design options that are highly desired by the consumer.

As an enforcer of the code, how will you explain that you have not only made the consumers choice all but unavailable and that they must accept a system that will be engineered to a much lower level of safety, souly justified by the chance that the IBC might use this language in 2021?

RB81 simply fails to address what is an unsubstantiated problem in residential applications and would fail to make glass guards and the built environment any safer. Furthermore the language is not technically consistent with the IBC but even more restrictive. Please vote to disapprove RB81.

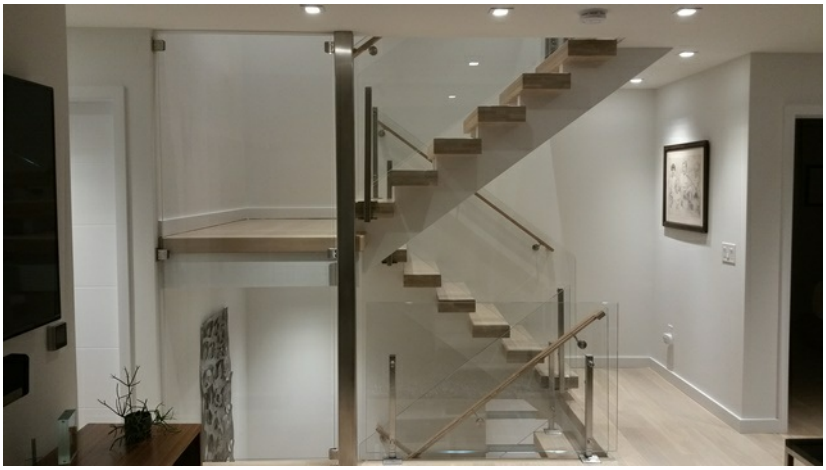

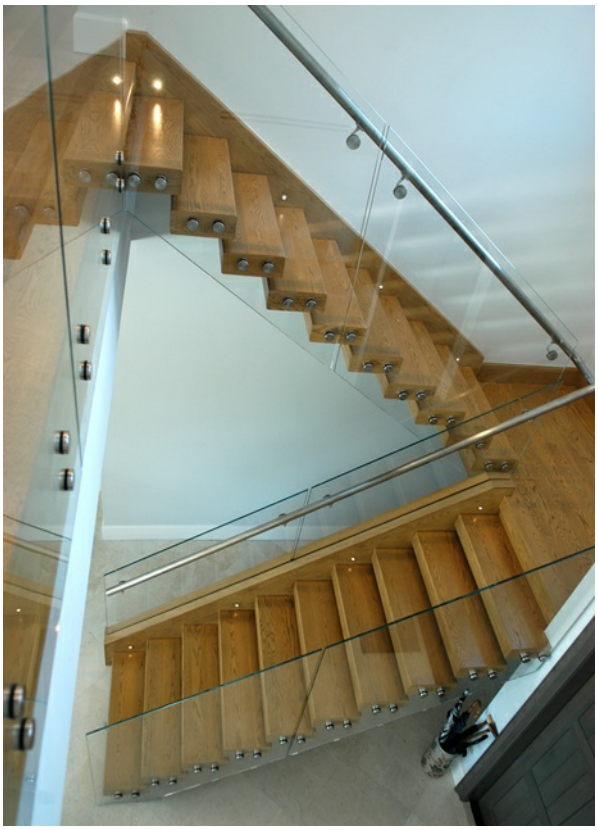

RB81-16

RB89-16
IRC: R310.1.

Proposed Change as Submitted

Proponent : Jeffrey Shapiro, representing Self (jeff.shapiro@intlcodeconsultants.com)

2015 International Residential Code

Revise as follows:

R310.1 Emergency escape and rescue opening required. *Basements,habitable attics* and every sleeping room shall have not less than one operable emergency escape and rescue opening. Where *basements* contain one or more sleeping rooms, an emergency escape and rescue opening shall be required in each sleeping room. Emergency escape and rescue openings shall open directly into a public way, or to a *yard* or court that opens to a public way.

~~**Exception**~~ **Exceptions:** 1. Storm shelters and *basements* used only to house mechanical *equipment* not exceeding a total floor area of 200 square feet (18.58 m^2).

2. Where the *dwelling* or *townhouse* is equipped with an automatic sprinkler system installed in accordance with Section P2904, sleeping rooms in *basements* shall not be required to have emergency escape and rescue openings provided that the *basement* has one of the following:

2.1. One means of egress complying with Section R311 and one emergency escape and rescue opening.

2.2. Two means of egress complying with Section R311.

Reason: This proposal was approved in the Group A cycle for inclusion in 2018 IBC Section 1030.1, applying to Group R-3 and R-4 dwelling units (as well as R-2). Approval by the IBC Means of Egress Committee was by a margin of 13-1, and the proposal survived 3 public comments from industry groups seeking disapproval. It is inconceivable that the IRC would not want to accept the same proposal, given that rejection of this proposal would make the IRC more restrictive on means of escape from dwelling units than the IBC.

It is of interest to note that the IBC also allows Group R-1 and all Group I occupancies to have sleeping rooms in basements of a sprinkler buildings without any emergency escape and rescue openings in the basement. Nevertheless, rather than seeking full equivalency with these higher risk occupancies when sprinklers are provided, this proposal and the companion proposal already approved for the IBC only seek a reduction in the number of basement escape openings. Under the proposal, a minimum of one basement escape window or door plus a means of egress will still be required. Plus, it is important to remember that both sprinklers and hard-wired interconnected smoke alarms installed throughout the dwelling will be required to qualify for the proposed exception. This combination of sprinklers and smoke alarms is well established by the NFPA 101 - Life Safety Code as a basis for eliminating all required means of escape openings from sprinklered one- and two-family dwellings, hotels, motels, apartments and similar uses.

As further justification, note that the states of New Hampshire and Virginia have amended their statewide code adoptions by eliminating all requirement for means of escape openings when sprinklers are provided. Minnesota adopted a similar amendment, but the allowance was limited to exempting all basement escape windows, and the State of Washington just adopted this proposal as a statewide IRC amendment.

From a technical perspective, there is less value to a basement means of escape because the dynamics of a basement fire differ from fires above grade. In a nonsprinklered fire event, it might be possible for an occupant to be rescued or escape using an above-grade window because the lower portion of the window may initially draw fresh air. However, a basement window well will quickly and entirely fill with smoke and heated gases if there's an uncontrolled fire in the basement, and the importance of having fire sprinklers in providing extra egress time in such cases cannot be overstated. Likewise, by the time firefighters arrive, rescuing an occupant from a developed basement fire through a means of escape window or using such window as an escape route for a firefighter would be highly unlikely. Firefighter and occupant safety is far better assured by sprinklers.

Looking at the value of this incentive, the cost savings associated with eliminating even one basement escape window and the associated ladder and window well can be significant. Combine this with the benefit of eliminating leakage and maintenance issues and tripping/fall hazards that may be associated with window wells, and the incentive grows. Finally, recognize the enormous benefit that this change will offer for builders, who will now be allowed to locate sleeping rooms in lot-constrained below-grade areas of walk-out basements, and to homebuyers, who will gain the option of finishing an unfinished basement without the contsraint of having to locate sleeping rooms based on existing window locations or having to add windows to an existing basement (which might lead to avoiding the issue by doing unpermitted work using an unlicensed contractor).

Considering that a number of states have legislatively preempted adoption of the IRC's residential sprinkler requirements for

one- and two-family dwellings, it is important to provide reasonable incentives to strongly encourage the installation of sprinkler systems. It is also fair to offer the same incentives to builders and homebuyers in states and jurisdictions where sprinklers are required. This single incentive might be valuable enough to encourage voluntary sprinkler installations, and still, the level of safety will equal or exceed what is required by the IBC for residential and institutional occupancies and by NFPA 101 Life Safety Code, which entirely deletes the requirement for ANY escape or rescue openings from one- and two-family dwellings that are equipped with NFPA 13D sprinkler systems [NFPA 101, Section 24.2.2.1.2(2)]

Cost Impact: Will not increase the cost of construction
The proposal adds an option to the code. There is no requirement to utilize this option; however, if it is used, the cost of construction may decrease.

Analysis: A review of the standard(s) proposed for inclusion in the code, ASTM C518, with regard to the ICC criteria for referenced standards (Section 3.6 of CP#28) will be posted on the ICC website on or before April 1, 2015.

RB89-16 : R310.1-SHAPIRO13328

Public Hearing Results

Committee Action: **Approved as Submitted**

Committee Reason: This proposal encourages design options and might even encourage sprinklers. In the past we have had sprinkler issues where there were give backs where a sprinkler system is provided. While this proposal is acceptable, these kinds of things seem to grow and we need to make sure that we have not gone too far. This is a minimum code and we should make sure it is not a code that requires compliance with the best that we can possible achieve.

Assembly Action: **None**

Individual Consideration Agenda

Proponent : Jeff Inks, representing Window & Door Manufacturers Association (jinks@wdma.com) requests Disapprove.

Commenter's Reason: WDMA is urging disapproval of this proposal because it is simply a compromise in occupant safety. This is not a market issue nor is that a concern. Occupant safety, and not just from fire, is fundamental to window, door and skylight manufacturers. While the exception is limited and there is no dispute the combination of compliant smoke alarms and fire sprinklers provides a high level of safety from fire, it does not eliminate the need for sleeping rooms to have EERO's as they serve a broader purpose than just escape or rescue from fire. That is clearly indicated by the I-code definition of EERO's -- E*MERGENCY ESCAPE AND RESCUE OPENING. An operable window, door or other similar device that provides for a means of escape and access for rescue in the event of an emergency* -- and the companion requirements for them so as to help ensure the purpose of the codes regarding occupant safety is met.
Regarding the allowance of a similar exception by NFPA 101 as part of the substantiation for this exception to be included in the IRC, the purpose of NFPA 101 is to "minimize danger to life from the effects of fire," while that of the IRC is much broader to include ".....safety to life and property from fire **and other hazards** attributed to the built environment....."

In addition to the fact that fire is not the only emergency that may be experienced by occupants where these openings may be needed to provide for escape and rescue, it must also be noted that the sprinkler systems permitted to allow this exception are intended to prevent flashover (total involvement), not necessarily extinguish a fire. Regardless, the area of fire origin or involvement could be between the sleeping rooms this exception would be applied to and the only other alternative means of egress, requiring the occupant to pass through or in proximity to it, something an occupant may be unable to do, shouldn't do for safety reasons or is simply too afraid to do.

With respect to approval of this exception in for IBC, we likewise disagree with that action for the same reasons and do not believe that justifies the far greater applicability of the exception that will result if approved for the IRC.

We understand and appreciate the value of residential fire sprinklers but do not believe exceptions to EERO requirements because of them or to incentivize the installation of them is a justified compromise in safety and we strongly urge disapproval of this proposal.

Proponent : Julie Ruth, representing American Architectural Manufacturers Association (julruth@aol.com) requests Disapprove.

Commenter's Reason: RB89 significantly reduces the safety of residential construction, without adequate compensation. The proponent of RB89 argues that a residential, NFPA 13D sprinkler system, provides a sufficient level of safety in residential basements to reduce the requirement for Emergency Escape and Rescue Openings. His argument is flawed for a few basic reasons:

1. His proposal is based upon the use of an NFPA 13D system. The level of coverage provided by such a system, the regulations with regards to oversight, location of sprinkler heads, inspection and water supply are all significantly less than they are for an NFPA 13 or NFPA 13R system. Therefore any argument based upon the relative safety and reliability of sprinkler systems in general is not relevant to the proposal.

2. His discussion focuses entirely upon possible basement fire scenarios. It does not address other possible hazardous situations in a basement, such as a build-up of toxic, hazardous chemicals, carbon monoxide, etc.

3. The proponent clearly states that his intent is to increase incentives for the installation of spinkler systems. Encouraging the installation of sprinkler systems to increase life safety is one thing. Pushing to reduce overall life safety for the sake of increasing spinkler installation is another.

RE89 should be Disapproved.

RB89-16

RB95-16
IRC: R310.2.3.3 (New).

Proposed Change as Submitted

Proponent : Homer Maiel, PE, representing ICC Tri-Chapter (Peninsula, East Bay and Monterey Bay) (hmaiel@gmail.com)

2015 International Residential Code

Add new text as follows:

R310.2.3.3 Window well fall protection. Window wells with a vertical depth greater than 30 inches shall have guards on all sides. The guards shall be provided in accordance with Section R312.1. Window well grates are not allowed. Where gates are installed for exit at window wells and the depth of the window well is greater than 30 inches, gates shall be installed with a permanent lock to prevent access by unauthorized persons. The gates shall be equipped to accommodate a locking device. The gates shall open outward away from the well, and shall be self-closing and have a self-latching device. Where the release mechanism of the self-latching device is located less than 54 inches from the bottom of the gate, the release mechanism shall be located on the well side of the gate not less than 3 inches below the top of the gate. The gate and guards shall have no opening larger than ½ inch within 18 inches of the release mechanism. Openings, in other parts of gates, shall comply with Section R312.1.3. Access ladders shall comply with Section R310.2.3.1 and shall extend from the bottom of the well to the top of the guard.

Reason: This new proposal is needed to prevent any accidental falls into the window wells. The 30-inch provision is taken from Section R312.1.1. Placements of grates on top of window wells are not allowed since it is shown, over time, that either boxes can be stored on top of the grates or even a car can be parked on the grates. Also the weight of the grate can be a factor in removing it in case of an emergency. Installation of gates is not mandatory. However, when the gates are used certain safety provisions are introduced. These provisions are immulated from Section 305 of 2015 ISPSC.

Cost Impact: Will increase the cost of construction

The increase will vary depending on the size and number of window wells and whether they choose to install gate(s).

RB95-16 :
R310.2.3.3 (NEW)-
MAIEL11568

Public Hearing Results

Committee Action: **Disapproved**

Committee Reason: While the language may be appropriate for an urban setting, where window wells could be quite deep, the committee fears this would mandate a solution that may not be appropriate for a less urban setting. For example, where you have a larger window well, the grade slopes, and not all sides are 30 inches. The proposed requirements should be limited to adjacent walking surfaces. The reason statement is confusing regarding gates and whether they are needed.

Assembly Action: **None**

Individual Consideration Agenda

Proponent : Homer Maiel, PE, representing ICC Tri-Chapter (Peninsula, East Bay, Monterey Bay (hmaiel@gmail.com) requests Approve as Submitted.

Commenter's Reason: In Louisville, the committee stated that "the committee fears this would mandate a solution that may not be appropriate for a less urban setting. For example, where you have a larger window well, the grade slopes, and not all sides are 30 inches." What do we do in case of decks? where the deck is elevated higher than 30 inche, the guards are required. Where it is less than 30 inches, guards are not required. In regard to to mandating the gates, the proposal is not mandating gates. It says " Where gates are installed..." It simply implies that IF one chooses to install gates, then certain requirements will kick in.

RB95-16

RB96-16

IRC: R310.3, R310.3.2, R310.3.2.1, R310.3.2.1 (New).

Proposed Change as Submitted

Proponent : Stephen Thomas, Colorado Code Consulting, LLC, representing Colorado Chapter ICC (sthomas@coloradocode.net)

2015 International Residential Code

Revise as follows:

R310.3 Emergency escape and rescue doors. Where a door is provided as the required emergency escape and rescue opening, it shall be permitted to be a side-hinged door or a slider. Where the opening is below the adjacent ~~ground elevation~~ grade, it shall be provided with ~~a bulkhead enclosure~~ an area well.

Delete and substitute as follows:

R310.3.2 ~~Bulkhead enclosures~~ Area Wells. ~~Bulkhead enclosures shall provide direct access from the *basement*. The bulkhead enclosure shall provide the minimum net clear opening equal to the door in the fully open position.~~
Area wells shall have a width of not less than 36 inches (914 mm). The area of the area well shall allow the emergency escape and rescue door to be fully opened.

Add new text as follows:

R310.3.2.1 Ladder and steps. Area wells with a vertical depth greater than 44 inches (1118 mm) shall be equipped with a permanently affixed ladder or steps usable with the door in the fully open position. Ladders or steps required by this section shall not be required to comply with Sections R311.7 and R311.8. Ladders or rungs shall have an inside width of not less than 12 inches (305 mm), shall project not less than 3 inches (76 mm) from the wall and shall be spaced not more than 18 inches (457 mm) on center vertically for the full height of the exterior stairwell.

Revise as follows:

~~R310.3.2.1~~ R310.3.2.2 Drainage. ~~Bulkhead enclosures~~
Area wells shall be designed for proper drainage by connecting to the building's foundation drainage system required by Section R405.1 or by an *approved* alternative method.

> **Exception:** A drainage system for ~~bulkhead enclosures~~ area wells is not required where the foundation is on well-drained soil or sand-gravel mixture soils in accordance with the United Soil Classification System, Group I Soils, as detailed in Table R405.1.

Reason: The language "bulkhead enclosure" has caused confusion for the users of the IRC. There are too many different definitions of what they are. The common use of the term enclosure can be interpreted that the bulkhead must be covered similar to bulkhead enclosures used for storm shelters. We do not believe this was the original intent. The purpose of this change is to clarify the intent of the code and remove the reference to the bulkhead enclosure. We have removed the term and replaced it with area well. The access requirements for an emergency escape and rescue door should not be any different than emergency escape and rescue windows. So, we have duplicated the requirements from the window section to the door section. They are used for the same purpose and should have identical requirements.

Cost Impact: Will not increase the cost of construction
This change will actually reduce the cost of construction since the actual enclosure over the bulkhead would not be required.

RB96-16 : R310.3-THOMAS11439

Public Hearing Results

Committee Action: **Approved as Submitted**

Committee Reason: A term that is less regional would be more appropriate. The term is confusing. What is a bulkhead? Are these basement stairs? Is this a doorway below grade?

Assembly Action: **None**

Individual Consideration Agenda

Public Comment 1:

Proponent : Stephen Thomas, Colorado Code Consulting, LLC, representing Colorado Chapter ICC (sthomas@coloradocode.net) requests Approve as Modified by this Public Comment.

Modify as Follows:

2015 International Residential Code

R310.4 Bars, grilles, covers and screens. Bars, grilles, covers, screens or similar devices are permitted to be placed over emergency escape and rescue openings, ~~bulkhead enclosures~~ area wells, or window wells that serve such openings, provided that the minimum net clear opening size complies with Sections R310.1.1 to R310.2.3, and such devices shall be releasable or removable from the inside without the use of a key, tool, special knowledge or force greater than that required for the normal operation of the escape and rescue opening.

Commenter's Reason: The original change was intended to remove the requirement that you had to have a bulkhead enclosure over any access from the basement. The committee agreed with this position and approved the item as submitted. After the committee hearing, we went back and found another section that needs to correlate with the original change. Section R310.4 talks about covers over the egress wells, etc. It also required covers over a bulkhead enclosure to comply. A bulkhead enclosure is a cover. So, that makes no sense. Therefore, we have removed 'bulhead enclosure' from the section to make it more sensible. We also added the language 'area well' to the section as well to coordinate with the revised section that was approved. The purpose of this modification is to just correlate the two sections.

RB96-16

RB113-16

IRC: R311.7.13 (New), R311.8.4 (New).

Proposed Change as Submitted

Proponent : Ali Fattah, City of San Diego Development Services Department, representing City of San Diego Development Services Department

2015 International Residential Code

Add new text as follows:

R311.7.13 Location on lot Exterior stairways serving the primary exit on habitable levels of a dwelling, including habitable attics, shall have a minimum fire separation distance of 5 feet measured at right angles from the exterior edge of the stairway, including landings, to:

1. Adjacent lot lines.
2. Other buildings on the same lot not accessory to the dwelling.

Exception: Exterior stairways fully supported on grade or stairways serving habitable levels located not more than 30 inches above adjacent grade shall not be required to comply with this section.

R311.8.4 Location on lot Exterior ramps providing serving the primary exit on habitable levels of a dwelling, including habitable attics, shall have a minimum fire separation distance of 5 feet measured at right angles from the exterior edge of the ramp, including landings, to:

1. Adjacent lot lines.
2. Other buildings on the same lot not accessory to the dwelling.

Exception: Exterior ramps fully supported on grade or stairways serving habitable levels located not more than 30 inches above adjacent grade shall not be required to comply with this section.

Reason: The IRC includes limited guidance for the application of fire separation distance when determining the location of exterior ramps and stairways providing egress from habitable spaces. This code change seeks to add a clarification based on existing requirements to require a fire separation distance of 5 ft. Exterior stairways and ramps are located exterior to the building envelope and as such are not protected with fire sprinklers. The new proposed requirements apply to exterior stairways whether or not they are required to comply with Section R311.4.

The proposed code change is being added to the IRC for consistency with the action taken by the Means of Egress Committee when they approved code change E 126-15 to require a fire separation distance of 5 ft when exterior stairways and ramps are associated with Group R-3 occupancies. The code change also exempted exterior exit stairways and ramps from being separated from the building they were associated with in Group R-3.

This code change is to correlate the IRC with modifications approved in Section 1027.5 of the IBC.

Cost Impact: Will not increase the cost of construction

The cost of construction will not be increased since stairways will be located beyond zoning set backs required by most jurisdictions. Exterior stairways and ramps are not protected with fire sprinklers.

RB113-16 :
R311.7.13 (NEW)-
FATTAH10990

Public Hearing Results

Committee Action: **Disapproved**

Committee Reason: This would make it more difficult to build stairs in the vicinity of lot lines. This is already adequately addressed by the IRC under projections in Sections R301.1 and R301.2.

Assembly Action: **None**

Individual Consideration Agenda

Proponent : Ali Fattah, City of San Diego Development Services Department, representing City of San Diego Development Services Department requests Approve as Submitted.

Commenter's Reason: We were proponents of the original code change and appreciate the feedback provided by the committee and speakers in opposition.

The proposed code change is meant to address the safety of occupants descending down exterior stairways providing the only means of egress to grade from an upper occupied level of a building regulated under the scope of the IRC. The code change as proposed adds to Section R311 for means of egress requirements and not Section R302 the fire resistant construction requirements.

Residential buildings designed under the scope of the IRC include limited fire resistive protection, notification and fire protection. Notification is through interconnected smoke alarms that notify occupants in the dwelling unit so a fire in a closely situated building or a dwelling unit below will not notify occupants in an upper unit. As a result notification may occur when the fire department arrives or a neighbor sarts shouting to wake up sleeping occupants in the upper unit.

We appreciate that some users of the code argue that any construction that is attached to the exterior wall of a building can be considered a projection since projection is not a defined term. We also accept that attached accessory structures such as decks or patio covers are included in the defined term "building" and therefore fire separation distance can be measured to their face. However it is the proponents belief that an exterior stairway required for the means of egress is not an accessory structure since it has to be present and functional at the time of final inspection, an accessory structure is optional and can be scoped out. The IRC does not require fire protection for occupants in the means of egress system since in most cases the vertical means of egress is within the same dwelling unit

If this code change is not approved exterior stairways can be located at zero fire separation distance or at best 2 ft fire separation distance with one hour protection under the stairway.

[RB] BUILDING. Building shall mean any one- and two-family dwelling or portion thereof, including *townhouses*, that is used, or designed or intended to be used for human habitation, for living, sleeping, cooking or eating purposes, or any combination thereof, and shall include *accessory structures t*hereto.

[RB] FIRE SEPARATION DISTANCE. The distance measured from the building face to one of the following:

1. To the closest interior *lot line*.
2. To the centerline of a street, an alley or public way.
3. To an imaginary line between two buildings on the *lot*.

The distance shall be measured at a right angle from the face of the wall.

RB113-16

RB114-16
IRC: R311.8, R311.8.1 (New).

Proposed Change as Submitted

Proponent : Charles Bajnai, Chesterfield County, VA, representing Virginia Building Code Officials Association (VBCOA), and Chesterfield County, VA (bajnaic@chesterfield.gov)

2015 International Residential Code

R311.8 Ramps.

Add new text as follows:

R311.8.1 Width. Ramps, including landings, shall be not less than 36 inches in clear width at all points above the permitted handrail height. Handrails shall not project more than 4-1/2 inches on either side of the ramp and the clear width of the ramp at and below the handrail height shall not be less than 31-1/2 inches where the handrail is installed on one side and 27 inches where handrails are provided on both sides.

Reason:

WHAT: This code change proposal provides prescriptive language for minimum ramp widths.

WHY: The current code specifies stair width (R311.7.1) and specifies stair landing width (R311.7.6) but does not specify the minimum width for ramps and ramp landings. While ramp slope (R311.7.8.1) is important, it is not the only critical dimension for ramps.

We have always been interpreting the code to infer that ramps and ramp landings should follow the width of stairs, and this proposed code change prescriptively codifies our assumptions.

Cost Impact: Will not increase the cost of construction

There should not be any increase in the cost of ramps because the width has always been accepted to be 36 inches.

RB114-16 :
R311.8 (NEW)-
BAJNAI10518

Public Hearing Results

Committee Action: **Disapproved**

Committee Reason: A width for ramps alone might have been acceptable. Ramps are generally provided for people that can't walk and are confined to a wheelchair or use a walker, etc. A minimum clear width of 32 inches would accomplish this.

Assembly Action: **None**

Individual Consideration Agenda

Public Comment 1:

Proponent : Charles Bajnai, representing Chesterfield County, VA (bajnaic@chesterfield.gov) requests Approve as Modified by this Public Comment.

Modify as Follows:

2015 International Residential Code

R311.8.1 Width. Ramps, including landings, shall ~~be not less than 36 inches in~~ have at least 32 inch clear width ~~at all points~~

~~above~~ inside the ~~permitted handrail height.~~ required ~~Handrails shall not project more than 4-1/2 inches on either side of the ramp and the clear width of the ramp at and below the handrail height shall not be less than 31-1/2 inches where the handrail is installed on one side and 27 inches where handrails are provided on both sides~~ handrail(s).

Commenter's Reason: The committee asked me what the width requirements were for ramps in ANSI-117. I told them that the IRC did not invoke any of the requirements of ASNI-117.

The denial was based on the following committee remarks:

"A width for ramps alone might have been acceptable. Ramps are generally provided for people that can't walk and are confined to a wheelchair or use a walker, etc. A minimum clear width of 32 inches would accomplish this."

I changed the dimension of ramp width to 32 inches inside the handrail(s) in deference to the committee's comments: "Ramps, including landings, shall have at least 32 inchin clear width inside the required handrail(s)."

RB114-16

RB119-16
IRC: R311.7.10.1.

Proposed Change as Submitted

Proponent : David Cooper, representing Stairbuilders and Manufacturers Association (coderep@stairways.org)

2015 International Residential Code

Revise as follows:

R311.7.10.1 Spiral stairways. Spiral stairways are permitted, provided that the clear width at and below the handrail is not less than 26 inches (660 mm) and the walkline radius is not greater than $24^{1}/_{2}$ inches (622 mm). Each tread shall have a depth of not less than $6^{3}/_{4}$ inches (171 mm) at the walkline. All treads shall be identical, and the rise shall be not more than $9^{1}/_{2}$ inches (241 mm). Open risers shall not be prohibited. Headroom shall be not less than 6 feet 6 inches (1982 mm).

Reason: The added text aids in understanding that open risers are permitted for Spiral Stairways as cited in:
311.7.5.1 Risers. (text of requirement omitted)

Exception 1. The opening between adjacent treads is not limited on spiral stairways.

Cost Impact: Will not increase the cost of construction
The change does not add material or labor to fabrication or construction.

RB119-16 :
R311.7.10.1-
COOPER12609

Public Hearing Results

Committee Action: **Disapproved**

Committee Reason: it is a mistake to have the language in multiple locations. There also is a problem with the formatting of the language.

Assembly Action: **None**

Individual Consideration Agenda

Public Comment 1:

Proponent : David Cooper, representing Stairbuilders and Manufacturers Association (coderep@stairways.org) requests Approve as Modified by this Public Comment.

Modify as Follows:

2015 International Residential Code

R311.7.5.1 Risers. The riser height shall be not more than $7^{3}/_{4}$ inches (196 mm). The riser shall be measured vertically between leading edges of the adjacent treads. The greatest riser height within any flight of stairs shall not exceed the smallest by more than $^{3}/_{8}$ inch (9.5 mm). Risers shall be vertical or sloped from the underside of the nosing of the tread above at an angle not more than 30 degrees (0.51 rad) from the vertical. Open risers are permitted provided that the openings located more than 30 inches (762 mm), as measured vertically, to the floor or grade below do not permit the passage of a 4-inch-diameter (102 mm) sphere.

Exceptions:

1. ~~The opening between adjacent treads is not limited on spiral stairways.~~
2. The opening between adjacent treads of spiral stairways shall be in accordance with Section R311.7.10.1
3. The riser height of spiral stairways shall be in accordance with Section R311.7.10.1.

R311.7.10.1 Spiral stairways. Spiral stairways are permitted, provided that the clear width at and below the handrail is not less than 26 inches (660 mm) and the walkline radius is not greater than $24^{1}/_{2}$ inches (622 mm). Each tread shall have a depth of not less than $6^{3}/_{4}$ inches (171 mm) at the walkline. All treads shall be identical, and the rise shall be not more than $9^{1}/_{2}$ inches (241 mm). Open risers are permitted. The opening between adjacent treads shall not be ~~prohibited~~ limited. Headroom shall be not less than 6 feet 6 inches (1982 mm).

Commenter's Reason: This public comment has addresses the committee's concern and the intent of the original proposal by replacing the current language in exception 1 of **R311.7.5.1 Risers** with a reference to **R311.7.10.1 Spiral stairways** where

the requirement will be more readily recognized and understood. The parallel language of both of the exceptions to the Risers section is now consistent. This modification is needed as the current location has already proven to be difficult to find by both industry and enforcement. This is not a technical change, is only editorial in nature, and will provide for better understanding of the code.

RB119-16

RB121-16
IRC: R312.1.5 (New).

Proposed Change as Submitted

Proponent : Christopher Jensen, Town of Canandaigua, NY, representing Town of Canandaigua (cjensen@townofcanandaigua.org)

2015 International Residential Code

Add new text as follows:

R312.1.5 Cable guards Cable guard rail systems shall have not less than one-eighth inch diameter cables spaced at not more than three inches on center. Required guard openings shall be in accordance with Section R312.1.3 under inspection loading. Inspection loading shall consist of suspending a 50 pound weight from a cable at the central point between supporting structures. Supporting structures shall not deflect during tensioning or inspection load testing. The cables shall have a tamper resistant system that allows for tension to be added to cables.

Reason: Cable rail system use has increased due to home owner's desire to minimize the visual impact of a rail system from their decks and porches.
Existing Section **R312.1.3, Opening Limitations,** does not detail load being placed on the sphere during inspection. A 4" sphere can easily pass through an under-tensioned cable rail system. The intent of the 4" sphere test was to approximate the size of a child's head and to prevent entrapment and suffocation.

Adding this section provides for a standard means to perform an inspection of these systems.

Cost Impact: Will increase the cost of construction
Currently, cable rail systems are permitted to have cable spacing and cable size which do not allow the passage of a 4" sphere (under no loading or pressure) per Section **R312.1.3, Opening Limitations.** Under loading these existing cable systems can deflect to allow for passage of a 4" sphere.
With approval of this new code section, the rail systems may require additional cables, heavier gauge cables, and additional support structures.

RB121-16 :
R312.1.5 (NEW)-
JENSEN10460

Public Hearing Results

Committee Action: **Disapproved**

Committee Reason: Building officials would be required to carry 50 pound weights to test cables if this proposal were approved. That is not practical.

Assembly Action: **None**

Individual Consideration Agenda

Public Comment 1:

Proponent : Edward Robison, representing self (elrobison@narrows.com) requests Approve as Modified by this Public Comment.

Modify as Follows:

2015 International Residential Code

R312.1.5 Cable or wire rope infill guards. Guards constructed using cable as infill panels shall comply with this section. Cable ~~guard rail systems~~ used for infill shall have a diameter of not less than one-eighth inch ~~diameter cables~~ (1/8") and be of corrosion resistant wire where exposed to wetting, with a minimum tensile strength of 1,800 lbs. spaced ~~at~~ not more than ~~three inches on center~~ 2-7/8" clear between cables and between cable and any adjacent rails. ~~Required guard openings~~ The cable infill may be installed horizontally, vertically or diagonally except where used as a swimming pool or spa enclosure or in other locations where climbing elements must be avoided the cables shall be installed vertically only. The frame shall be ~~in accordance~~ capable of safely supporting the pretension loads from the cable infill and guard live loads concurrently. Individual cables shall be able to safely support a two hundred pound (200 lb) load vertically at any location without any permanent

deformation to the supporting frame or cable anchors. Unless demonstrated otherwise by testing or analysis cables shall be installed with ~~Section R312.1.3 under inspection loading.~~ not less than ~~Inspection loading shall consist of suspending a 50 pound weight from a cable at the central point between supporting structures. Supporting structures~~ two hundred pounds (200 lbs) and not more than four hundred pounds (400 lbs) tension, shall not ~~deflect during tensioning or inspection load testing. The~~ free span over three feet (3ft) and individual cables shall not exceed sixty-five feet (65 ft) total length. Each cable shall have a ~~tamper resistant system~~ tamper-resistant tensioning device that allows for increasing cable tension ~~to be added to~~ or retensioning cables as necessary.

R312.1.5.1 Inspection. The cables shall be tensioned so there is no visible sag in the cables. Cables shall be able to resist a twenty-five pound (25 lb) load applied perpendicular to any cable in any direction with not more than one-half inch (1/2 in) deflection.

Commenter's Reason: The code in its current form is overly ambiguous about what the requirements for use of cable (wire rope) infill in constructing guards. This creates confusion as widely different requirements are imposed by code officials and inspectors. It also has lead to installations that are unsafe because of overspanning or undertensioning of the cables will allow a child to slip between them.
The proposal as written will cause problems with inspections as it will be difficult to hang a 50# weight on a cable and misses some of the other issues associated with designing and installing cable infill. Hanging a 50 lb load at the center of a single cable is not consistent with the 50 lb load on one square foot required for guard infills.

This will impose a very different test load than would be applied to pickets, bars, wire fencing or similar open infill material.
A 50 lb load on a single cable will cause a smaller opening between two adjacent cables than 25 lb opposing loads on the two adjacent cables.
No small child would be able to exert a 50 lb force on the cables, a child would need to be heavier than 50 lbs minimum.
There is no limitation indicated on how much the cable can deflect when loaded.
I assume the intent is to still prevent the 4" sphere from fitting through but this needs to be clearly stated or a cable deflection limit specified.
The hanging 50 lb loading requirement also won't work for non-horizontal configurations which may be used.
It can also be difficult to hang a 50 lb weight on the cables because of interference from the other cables.
I typically design systems so that a 16.7 lb load won't deflect the cable over 1/2". This is based on the 3" cable spacing will require the 50 lb on 1 SF load to be supported by 3 cables.
I assume two adjacent cables will be pushed in opposite directions so that 1/2" for each cable would then open to 4" center to center.

Also of concern is the clause "Supporting structures shall not deflect during tensioning or inspection load testing" as this would imply an infinitely rigid system.
Some deflection of the supporting frame must occur as the cables are tensioned because loads are being applied to it by the cables.
When the cables are loaded the increased cable load always causes some deflection in the frame that is partially balanced by reduced tension in the adjacent cables.
The frame deflections will be inherently limited by the need to support the cables and keep them tensioned. If it has inadequate stiffness it won't be able to support the cables during tightening.

I also verify that the cable and frame will safely support a 200 lb load as I expect someone will step on it. I see this as a safety issue that should be included in the code. The recommended rewrite of the proposed section will remove the current ambiguities and provide safe cable infill installations.

I suggest revising it to :
R312.1.5 Cable ((wire rope) infill guards: Guards constructed using cable as infill panels shall comply with this section. Cable used for infill shall have a minimum diameter of one-eighth inch (1/8") and be of corrosion resistant wire where exposed to wetting, with a minimum tensile strength of 1,800 lbs. spaced no more than 2-7/8" clear between cables and between cable and any adjacent rails. The cable infill may be installed horizontally, vertically or diagonally except where used as a swimming pool or spa enclosure or other locations that climbing elements must be avoided the cables must be installed vertically only. The frame shall be capable of safely supporting the pretension loads from the cable infill and guard live loads concurrently.
Individual cables shall be able to safely support a two hundred pound (200 lb) load vertically at any location without any permanent deformation to the supporting frame or cable anchors. Unless demonstrated otherwise by testing or analysis cables shall be installed with a minimum of two hundred pounds (200 lbs) and maximum of four hundred pounds (400 lbs) tension, shall not free span over three feet (3ft) and individual cables shall not exceed sixty-five feet (65 ft) total length. Each cable shall have a tamper-resistant tensioning device that allows for increasing cable tension or retensioning cables as necessary.

R312.1.5.1 Inspection: The cables shall be tensioned so there is no visible sag in the cables. Cables must be able to resist a twenty-five pound (25 lb) load applied perpendicular to any cable in any direction with no more than one-half inch (1/2 in) deflection.

RB121-16

RB129-16

IRC: R313, R313.1, R313.1.1, R313.2, R313.2.1.

Proposed Change as Submitted

Proponent : William Rodgers, City of Petal, representing Gulf Coast Region IX

2015 International Residential Code

Revise as follows:

SECTION ~~R313~~ APPENDIX X AUTOMATIC FIRE SPRINKLER SYSTEMS

(The provisions contained in this appendix are not mandatory unless specifically referenced in the adopting ordinance.)

SECTION X101
AUTOMATIC FIRE SPRINKLER SYSTEMS

~~R313.1~~ X101.1 Townhouse automatic fire sprinkler systems. An automatic residential fire sprinkler system shall be installed in *townhouses*.

Exception: An automatic residential fire sprinkler system shall not be required where *additions* or *alterations* are made to existing *townhouses* that do not have an automatic residential fire sprinkler system installed.

~~R313.1.1~~ X101.1.1 Design and installation. *No change to text.*

~~R313.2~~ X101.2 One- and two-family ~~dwellings~~ dwelling automatic fire sprinkler systems. An automatic residential fire sprinkler system shall be installed in one- and two-family *dwellings*.

Exception: An automatic residential fire sprinkler system shall not be required for *additions* or *alterations* to existing buildings that are not already provided with an automatic residential sprinkler system.

~~R313.2.1~~ X101.2.1 Design and installation. *No change to text.*

Reason: Since so many states have removed or edited the residential fire sprinklers, a great deal of effort is required to edit the IRC each time it is adopted. Moving the residential sprinkler requirement back to the appendix allows jurisdictions to adopt the IRC without editing on a case by case basis. Those few jurisdictions that wish to adopt the fire spinklers can simply adopt the appropriate appendix number.

Cost Impact: Will not increase the cost of construction
Residential fire sprinklers are allready required by the IRC. Moving the requirement back to the appendix does not require construction costs that are not required by the code.

RB129-16 : R313-RODGERS9808

Public Hearing Results

Committee Action: **Disapproved**

Committee Reason: There is no compelling technical justification for removing the automatic fire sprinkler requirements from the body of the IRC. Removing these requirements would create a yo-yo effect that would create confusion in the political arena for many jurisdictions and compromise the integrity of the IRC. The IRC needs to be consistent on this issue.

Jurisdictions are finding ways to deal with the issue when they decide to amend the code upon adoption. Some remove the sprinkler requirements. We have found ways to deal with this issue in the IRC, such as by creating requirements based on whether sprinklers are actually provided in each IRC building. For the most part, it is working.

Jurisdictions rely on ICC and the IRC to give them proper guidance, and requiring sprinklers is the proper guidance.

Sprinkler requirements have worked in states that have adopted them. The cost impact statement appears to be exaggerated based on experience in states that have adopted the sprinkler requirements.

Assembly Motion: **As Submitted**
Online Vote Results: **Failed**
Support: 15.82% (131) Oppose: 84.18% (697)
Assembly Action: **None**

Individual Consideration Agenda

Proponent : Joseph Crum, City of Winter Springs Florida, representing City of Winter Springs Florida (jcrum@winterspringsfl.org) requests Approve as Submitted.

Commenter's Reason: The codes are supposed to be minimum codes to create a safe structure. When this section was added to the body of the code there was no valid reason provided and it creates additional cost for residential construction unless the State or juristiction opts to create a State or local technical amendment to remove this requirement from the code requirements. It also adds additional cost for the State or Jurisdiction to remove this requirement when adopting the codes which is just the opposite of what it should be which is to add additional requirements to a minimum code if desired.
One of the committee reasons was "Jurisdictions are finding ways to deal with the issue when they dedide to amend the code upon adoption. Some remove the sprinkler requirements." This is just the opposite of what should occur as the jurisdictions should only need to go through the process of amending the code and expense expense involved to add additional requirements to a minimum code and not need to remove something from a minimum code that goes above and beyond the requirements to create a safe, habitable structure. The required smoke detector systems should be the minimum requirement as it was for many years and the addition of the fire sprinkler system should be in an appendix for adoption if desired for added protection.

This should not be a fire service vs building issue however, I was present when this provision was approved to be placed in the body of the code due to the fire service busing in members just to vote on this one proposal and then leaving after the vote.

This change will place the additional layer of protection in the appendix of the base MINIMUM code for anyone to adopt if desired and will not add cost to the construction but would actually reduce cost of construction if not chosen and would also reduce unnecessary cost for State and local governments to create and process a State or local amendment to remove this requirement from the adopted code.

Proponent : Blake Steiner, representing International Code Council Gulf Coast Region IX requests Approve as Submitted.

Commenter's Reason: The purpose of the International Residential Code is to set a minimum standard for the construction of one- and two-family dwellings. The committee action stated, "Jurisdictions rely on ICC and the IRC to give them proper guidance, and the requiring sprinklers is the proper guidance." While Region IX agrees that jurisdictions should rely on ICC and IRC, it believes this particular guidance should be reconsidered. The vast majority of jurisdictions have specifically amended this requirement out of the IRC, and the mandate to install fire sprinkler systems is not being widely implemented across the U.S. In fact, 48 states currently do not have the fire sprinkler mandate in their state codes for one- and two-family dwellings. Most of those states are not allowing local jurisdictions to adopt stricter requirements than those at the state level. Region IX believes that this requirement which goes beyond what should be considered a minimum standard has made local implementation difficult. In order to justify a minimum standard, there must be a cost/benefit threshold. Residential fire sprinklers should not be part of the IRC code's requirements because the cost of fire sprinklers is not justified by the benefits of their use, especially in newer homes where the risk of fire is lower and the use of smoke alarms is sufficient.

The age of the home should be considered when interpreting fire data, and newer homes do not have the same risk of fire that older homes have. The National Fire Incident Reporting System (NFIRS) data does not distinguish the age of the home involved in the fire, thus greatly reducing the value of this data for building codes that target new construction. In states where the National Association of Homebuilders (NAHB) has matched the fire data with the age of affected homes, data shows that fatalities are heavily concentrated in older homes, regardless of the usage of fire sprinklers. According to NFPA's U.S. Home Structure Fire Face Sheet, the leading causes of unintentional home structure fires are cooking equipment, heating equipment, and electrical distribution and lighting equipment. Newer homes are much less likely to experience cooking and heating equipment fires due to new appliances with safety features, clearances, vents, and chimneys that comply with current code. The efficiency of newer heating systems reduce the use of supplemental heaters, which also reduces the risk of fire in newer homes. As far as electrical fires are concerned: "A strong relationship between housing age and the rate of electrical fires has been observed, with the housing over 40 years old having the strongest association with electrical distribution fires. As of 2013, the median age of one- and two- family housing was over 35 years. With more than half of the housing stock older than 35 years, electrical issues become an increasingly larger player in residential fires," (See FEMA's One- and Two-Family Residential Building Fires 2011-2014, page 4).

Data shows that the most effective fire protection requirement in the IRC is smoke alarms. Since the time that smoke alarms have been required in dwellings, there has been a significant drop in the number of reported fires, injuries, and fatalities in the United States. Since 1980, the numbers of fires has dropped by 50% and fatalities have dropped by about the same margin, all

during the same time period that the population increased and smoke alarms were required in model codes but sprinklers were not (See Michael J. Karter Jr., Fire Loss in the United States During 2014 and NFPA, Quincy, MA, September 2014). According to NFPA, three out of five home fire deaths resulted from fires in properties without at least one working, battery-operated smoke alarm. Ensuring every home in the U.S. has at least one working smoke alarm would save close to 900 lives each year (Marty Ahrens, Smoke Alarms in U.S. House Fires, NFPA, Quincy, MA September 2015). Smoke alarms continue to become more effective with ongoing technical advances which have greatly reduced false alarms and can be expected to further reduce the number of fatalities. Hardwired, interconnected smoke alarms are installed in new homes, which are more likely to operate and alert occupants to a fire.

Since newer homes have less risk of fire and have smoke alarms, the cost of installing a fire sprinkler system is simply not worth the benefits of use. The report Home Fire Sprinkler Cost Assessment from the *Fire Protection Research Foundation* shows that the average cost of a sprinkler to a builder is $6,000 – more than many home-buyers can afford. In fact, just a $1,000 increase in home prices keeps more than 200,000 households out of the market nationally.

It has been generally stated that fire sprinklers reduce property damage by 70%; however, this is inconsistent with NFIRS data, which, depending on the year, shows slightly greater loss of property in homes that have sprinklers. Even so, this supposed reduction of property damage is largely irrelevant, given how much sprinklers cost. Any conceivable reduction in property losses can at best go a small way to offsetting the costs of sprinklers (see Using NIST's New Web Tool to Compare Sprinkler Costs and Benefits). However, since some will choose to build above and beyond what is required, code officials should have guidance on how such fire sprinkler systems should be installed by consulting the appendix.

While the requirement for residential sprinklers is well-meaning, the IRC should be focused on those provisions of the code which are most effective. The benefits of residential sprinklers are not significant enough to warrant its existence outside the appendix. Families who cannot qualify to purchase homes due to the increased cost from well-meant but expensive and ultimately unnecessary safety features will remain in housing that is less safe because it's built to less stringent code requirements. These older homes can have outdated appliances, space heaters, faulty wiring, or lack of safety features such as smoke alarms and egress windows installed to today's code requirements. Requiring new one- and two-family dwellings to have costly sprinkler systems does not meet the cost/benefit threshold to justify a requirement in the code.

Respefully Submitted,

Blake J. Steiner, CBO

ICC Gulf Coast Region IX, Vice President

Building Official's Association of Louisiana, President

Rapides Area Planning Commission, Chief Building Official

RB129-16

RB140-16
IRC: R315.2.2.

Proposed Change as Submitted

Proponent : Kevin McOsker, representing Southern Nevada Chapter of ICC (ktm@ClarkCountyNV.gov)

2015 International Residential Code

R315.2.2 Alterations, repairs and additions. Where *alterations*, repairs or *additions* requiring a permit occur, or where one or more sleeping rooms are added or created in existing *dwellings*, the individual *dwelling unit* shall be equipped with carbon monoxide alarms located as required for new *dwellings*.

Exceptions:

1. Work involving the exterior surfaces of *dwellings*, such as the replacement of roofing or siding, or the addition or replacement of windows or doors, or the addition of a porch or deck, is exempt from the requirements of this section.
2. Installation, alteration or repairs of plumbing or mechanical systems not involving a fuel fired applicance are exempt from the requirements of this section.
3. Replacement of fuel fired mechanical systems with an input rating not greater than the original mechanical system.

Reason: The code appears to have been changed to match the verbiage of section R314.2.2 Smoke Alarms, without taking into account the differences. Common sources of Carbon Monoxide in a residence includes furnaces or boilers, gas stoves and ovens, fireplaces, both gas and wood burning, water heaters, clothes, wood stoves, power generators, motor vehicles (attached garages), etc. To exempt the installation, alteration or repair of those items from the requirements of the code appears counterproductive to the intent of the base code. The replacement of a fuel fired mechanical systems of the same or lower input rating is exempted in this proposal due to the additional language in Exception 2. When larger fuel fired mechanical systems are replaced, this would be the code trigger to require Carbon Monoxide Alarms.

Cost Impact: Will increase the cost of construction
The cost is relatively minor requiring the installation of Carbon Monoxide Alarms.

RB140-16 :
R315.2.2-
MCOSKER12180

Public Hearing Results

Committee Action: **Disapproved**

Committee Reason: If we are replacing kind for kind, the hazard still exists. If the hazard still exists, this provides an opportunity to provide the protection.

Assembly Action: **None**

Individual Consideration Agenda

Public Comment 1:

Proponent : Kevin McOsker, representing Southern Nevada Chapter of ICC (ktm@ClarkCountyNV.gov) requests Approve as Modified by this Public Comment.

Modify as Follows:

2015 International Residential Code

R315.2.2 Alterations, repairs and additions. Where *alterations*, repairs or *additions* requiring a permit occur, or where one or more sleeping rooms are added or created in existing *dwellings*, the individual *dwelling unit* shall be equipped with carbon monoxide alarms located as required for new *dwellings*.

Exceptions:

1. Work involving the exterior surfaces of *dwellings*, such as the replacement of roofing or siding, or the addition or replacement of windows or doors, or the addition of a porch or deck, is exempt from the requirements of this section.
2. Installation, alteration or repairs of plumbing or mechanical systems not involving a fuel fired ~~applicance~~ appliance are exempt from the requirements of this section.
3. ~~Replacement of fuel fired mechanical systems with an input rating not greater than the original mechanical system.~~

Commenter's Reason: The majority of the objections to this code proposal was the additional language contained in Exception #3. The committee commented that the carbon monoxide hazard still exists, so waiving the installation of the alarm was the basis for disapproval. Therefore, deleting the 3rd exception from the proposal eliminates the objectionable language. The revised language that remains would require a Carbon Monoxide Alarm when a permitted repair, alternation, or installation of a mechanical system that includes a fuel fired appliance. This appears to be a reasonable code trigger to require the installation of a Carbon Monoxide Alarm. The current code would allow any and all mechanical systems, including those involving a fuel-fired appliance, to be installed without a Carbon Monoxide Alarm.

RB140-16

RB147-16
IRC: R316.4.

Proposed Change as Submitted

Proponent : Marcelo Hirschler, representing GBH International (gbhint@aol.com)

2015 International Residential Code

Revise as follows:

R316.4 Thermal barrier. Unless otherwise allowed in Section R316.5, foam plastic shall be separated from the interior of a building by an *approved* thermal barrier of not less than $^{1}/_{2}$-inch (12.7 mm) gypsum wallboard, ~~$^{23}/_{32}$-inch (18.2 mm) wood structural panel~~ heavy timber in accordance with Section 602.4 of the International Building Code or a material that is tested in accordance with and meets the acceptance criteria of both the Temperature Transmission Fire Test and the Integrity Fire Test of NFPA 275.

Reason: Thermal barriers are materials that comply with NFPA 275. In order to comply with NFPA 275 thermal barrier materials (in combination with the foam plastic insulation they are supposed to protect) are supposed to resist flashover after exposure to a room-corner test (using a test specimen that covers 3 walls and the ceiling of an 8 ft. by 12 ft. by 8 ft. room) such as NFPA 286, as well as comply with a number of other requirements (peak heat release rate of no more than 800 kW, flames that don't reach the extremities of the test specimen, total smoke release of no more than 1,000 m^2).
As an alternative to testing to NFPA 286 the thermal barriers are allowed to be tested to FM 4880, UL 1040 or UL 1715, all severe large scale tests.

Beyond the test just mentioned, thermal barriers must also be able to pass a fire resistance test using a time-temperature curve like the one in ASTM E119 for 15 minutes.

It is clear (and fire test data have shown this) that thin wood panels materials will not comply with these requirements, because if a thin wood panel, covering a foam plastic insulation material, is exposed to the fire source in NFPA 286, it will reach flashover well before the end of the 15 minute test period.

Wood is a combustible material and its thickness is critical in determining its ease of ignition and capability to transmit heat. Just like it is easy to ignite kindling in a camp fire but difficult to ignite heavy logs, heavy timber can be assumed to be equivalent to a thermal barrier.

Discussions held during the IRC hearings for the 2015 edition addressed the interest by some proponents that a wood material be permitted to be used as a thermal barrier without testing and that led to the present IRC code language. The 2015 IBC consent agenda includes the addition of heavy timber as a thermal barrier material in that code (from acdepted proposal FS172-15) and, therefore, this proposal suggests that heavy timber is a wood material that could safely be used as a thermal barrier, while thin wood panels would not be appropriate.

Cost Impact: Will not increase the cost of construction
It is likely that heavy timber will be more costly than thin plywood, if used as a thermal barrier. However, the alternate thermal barrier materials, including 1/2 inch gypsum board, are still acceptable and thus the cost of thermal barriers will not need to change.

RB147-16 :
R316.4-
HIRSCHLER11664

Public Hearing Results

Committee Action: **Disapproved**

Committee Reason: By the time a fire burns through 3/4 inch of OSB your problems are probably far greater than the thermal barrier catching fire. Requiring heavy timber as a thermal barrier seems excessive.

Assembly Action: **None**

Individual Consideration Agenda

Public Comment 1:

Proponent : Marcelo Hirschler, representing GBH International (gbhint@aol.com) requests Approve as Modified by this Public Comment.

Modify as Follows:

2015 International Residential Code

R316.4 Thermal barrier. Unless otherwise allowed in Section R316.5, foam plastic shall be separated from the interior of a building by an *approved* thermal barrier of not less than $^{1}/_{2}$-inch (12.7 mm) gypsum wallboard~~, heavy timber in accordance with Section 602.4 of the International Building Code~~ or by a material that is tested in accordance with and meets the acceptance criteria of both the Temperature Transmission Fire Test and the Integrity Fire Test of NFPA 275.

Commenter's Reason: The section indicates that the thermal barrier can be composed of three types of materials, two of which are equivalent in fire performance: 0.5 inch gypsum and a material that meets the requirements of NFPA 275. However, the third material mentioned is not equivalent to the other two: 23/32 inch wood structural panel will burn and reach flashover in less than 15 minutes and fail the test requirements of NFPA 275. It is, therefore, not an aceptable thermal barrier.
The proposal recommended the use of heavy timber as an acceptable thermal barrier alternate if a wood product is desired (as is used in the IBC) and the committee thought that was excessive, although it is, actually, roughly equivalent to the other acceptable thermal barriers. The objective of a thermal barrier is to ensure that the fire does not reach the foam plastic insulation behind it before at least 15 minutes have elapsed and 23/32 inch wood structural panel does not offer that protection.

RB147-16

RB152-16

IRC: R316.5.14 (New).

Proposed Change as Submitted

Proponent : Avery Lindeman, Green Science Policy Institute, representing Green Science Policy Institute (avery@greensciencepolicy.org); Marjorie Smith, representing Siegel & Strain Architects (Msmith@siegelstrain.com); Tom Neltner, Environmental Defense Fund, representing Environmental Defense Fund (tneltner@edf.org); Veena Singla, representing Natural Resources Defense Council (vsingla@nrdc.org); Tom Lent, Healthy Building Network, representing Healthy Building Network (tlent@healthybuilding.net); Suzanne Drake, Perkins+Will, representing Perkins+Will (suzanne.drake@perkinswill.com); Vytenis Babrauskas (vytob@doctorfire.com); Donald Lucas, representing Lawrence Berkeley National Laboratory (d_lucas@lbl.gov); Tony Stefani, representing San Francisco Firefighters Cancer Prevention Foundation (stefanit@sbcglobal.net); Dennis Murphy, representing USGBC California (dennis@usgbc-california.org); Jen Jackson, representing TBD (cynthia.jackson@sfgov.org); Jonathan Wilson, representing National Center for Healthy Housing (jwilson@nchh.org); Andrea Traber, representing Integral Group (atraber@integralgroup.com); Martin Hammer, Martin Hammer, Architect, representing Martin Hammer, Architect (mfhammer@pacbell.net); Russ Pitkin, SERA Architects, representing SERA Architects, Inc (russp@serapdx.com); Stacia Miller, International Living Future Institute, representing International Living Future Institute (advocacy@living-future.org); David Eisenberg, Development Center for Appropriate Technology, representing Development Center for Appropriate Technology; Jan Willemse, representing Zimmer Gunsul Frasca Architects LLP

2015 International Residential Code

Add new text as follows:

R316.5.14 Below grade use. Foam plastic insulation shall not be required to meet the flame spread index and smoke-developed index criteria of Section R316.3 and shall not be subject to oxygen index limits provided that it is marked for below grade use only and is installed in accordance with one of the following:

1. The insulation is located between a concrete slab on grade and its subgrade.
2. The insulation is separated from the building interior by a masonry or concrete wall or foundation. Such insulation installed vertically shall be not less than 6 inches (152 mm) below finished exterior grade. Where installed horizontally, it shall be protected in accordance with Section R403.3.2.

Reason: This proposal creates a new sub-section in R316.5 which enables the voluntary use of foam plastic insulation that is not subject to flame spread, smoke-developed, and oxygen index requirements in certain installations below grade. This proposed code section creates an option whereby foam plastic insulation without flame retardants can be safely used below grade; it does not mandate any alteration to current building practice. It maintains the same level of fire safety provided under the current code and increases consumer choice of insulation products for unexposed or buried applications.
Figures 1 and 2 depict examples of installations where the proposed code section could be applied. These include insulation between a concrete slab on grade and its subgrade and exterior insulation for basement and foundation walls and frost-protected shallow foundations.

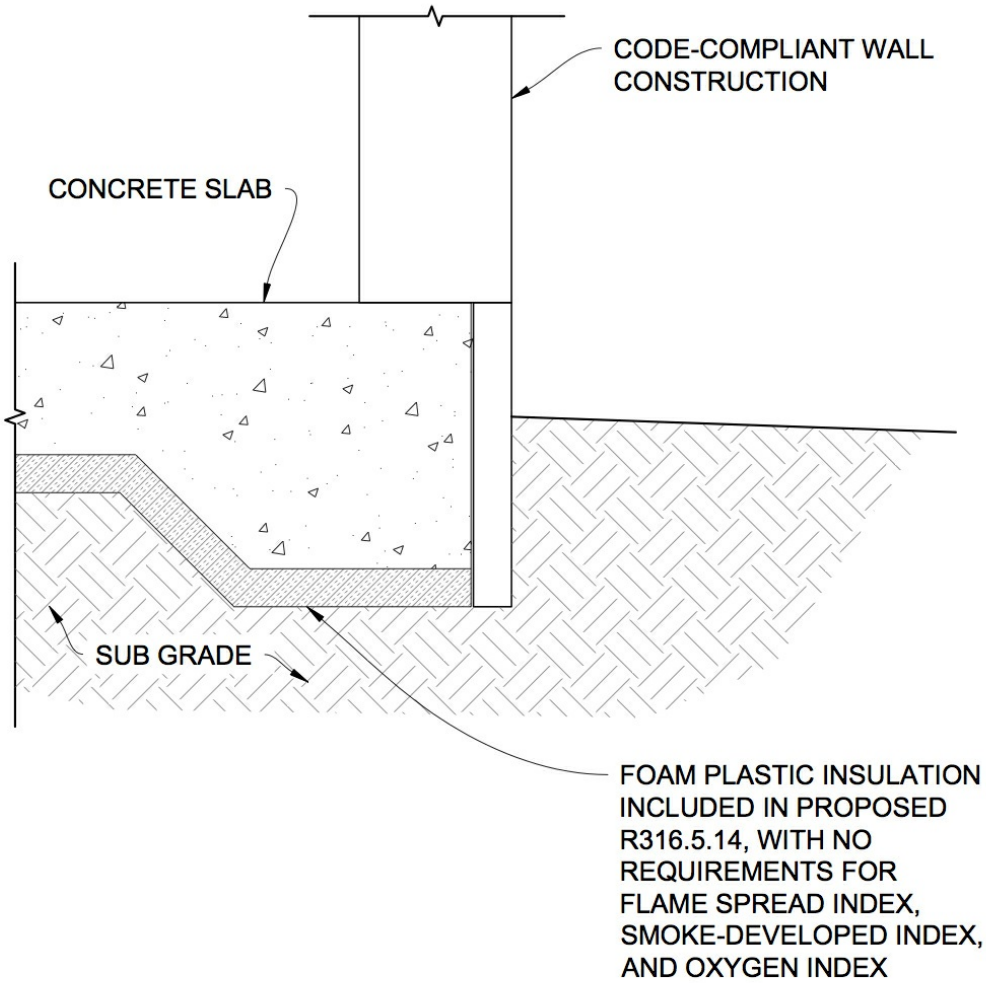

Figure 1: UNDER-SLAB BELOW-GRADE INSULATION

Proposed Code Section R316.5.14

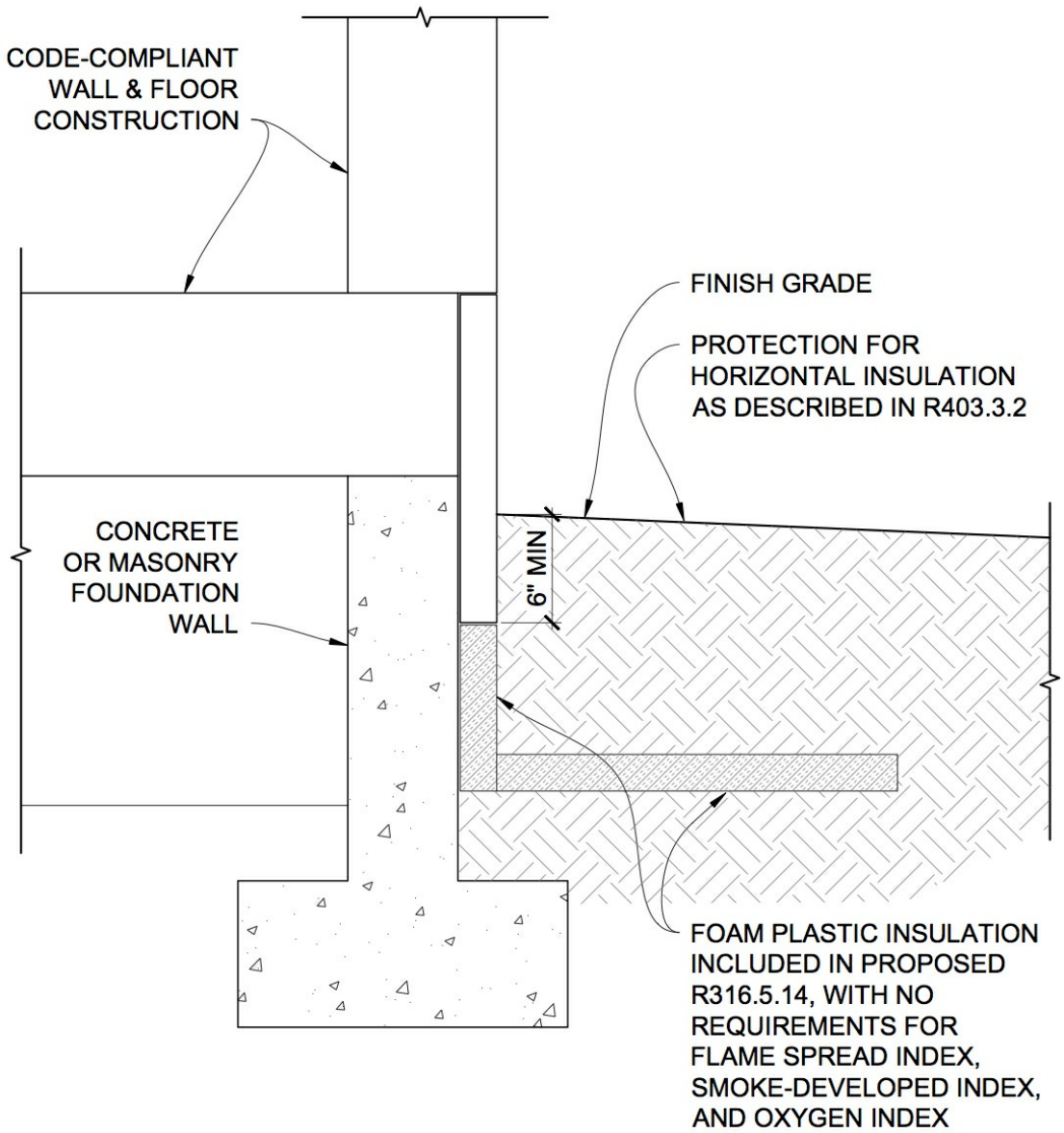

Figure 2: EXTERIOR BELOW-GRADE INSULATION

Proposed Code Section R316.5.14

The proposed code section maintains fire safety in the following ways:

- Insulation installed in accordance with this proposed code change is completely separated from the building interior.
- Insulation installed in accordance with this proposal has no exposure to a realistic source of ignition. It is protected either by a concrete slab having a minimum thickness of 3.5 inches (89 mm) as specified in IRC Section **R506 Concrete Floors (On Ground)**; or by a minimum of 6 inches of soil for exterior vertical insulation; or by a minimum of 12 inches of soil for horizontal exterior insulation unless additionally protected by concrete or asphalt as described in IRC Section **R403.3.2**

Protection of horizontal insulation below ground. These proposed protection requirements are based on existing code requirements for insulation protection and ensure that insulation covered by this proposal would not become exposed during the course of use. **Table 1** provides further details and references for proposed protection requirements.

- Insulation installed in accordance with this proposal does not have access to adequate oxygen to sustain a fire, as demonstrated by results from fire tests of below-grade foam plastic insulation. Fire testing is not regularly conducted on materials which are limited to buried applications only; however, the proponents conducted tests to address comments on similar proposals from the 2015 IBC-Fire Safety code committee that no fire test data had been submitted. These tests are described below.
  - **Description of Tests:** There is no established fire test method for the configurations covered by this proposed code section. The co-proponents are unaware of data on flame spread or smoke-developed between concrete and sub-grade material for foams of various material properties. Therefore, in response to requests for fire test data of relevant assemblies, Dr. David Rich at Reax Engineering Inc., and Dr. Donald Lucas (Lawrence Berkeley National Laboratory) and Avery Lindeman (Green Science Policy Institute), conducted tests to evaluate how different foam plastic insulation materials installed below grade would react when subjected to a range of fire spread scenarios.

    The insulation materials were sandwiched between concrete pavers (2 inches thick) and earth or other non-combustible surface. Tests were conducted with and without an externally applied radiant heat flux comparable to a post-flashover fire condition. Two types of insulation were tested: one that complied with the requirements of International Residential Code (IRC) Section **316.3 Surface burning characteristics**; and a similar below-grade insulation material that did not comply with Section 316.3 requirements. Ignition was achieved at an opening in the pavers to observe fire spread beneath the simulated concrete slab. This was necessary because when there were no openings between the pavers, neither sample of foam plastic insulation ignited, even at conditions where melting occurred. When there were significant openings (16 square inches) or gaps (2.5 inches) between the concrete pavers, and insulation was subjected to an open flame ignition source and an external heat flux, both samples ignited and burned comparably; however, without an external heat flux, ignition of insulation was followed by limited flame spread, and flames self-extinguished due to restricted access to oxygen as the flame burned away from the opening in the pavers.
- Insulation installed in accordance with this proposed code change is still subject to the labeling and identification requirements of Section **R316.2 Labeling and identification** which ensures that foam plastic insulation is labeled with the product identification and sufficient information to determine that the end use complies with code requirements. This proposal would additionally require that materials for use in the allowed below-grade applications be clearly labeled for below grade use only as specified in the proposed Section R316.5.14.

Table 1: Comparison of existing codes and standards with proposed provisions for insulation protection.

Existing Code Section	Description of Protection Requirements	Relevance for Proposed Section R316.5.14
IECC Section C303.2.1	"Insulation applied to the exterior of basement walls, crawlspace walls and the perimeter of slab-on-grade floors shall have a rigid, opaque and weather-resistant protective covering to prevent the degradation of the insulation's thermal performance. The protective covering shall cover the exposed exterior insulation and extend a minimum of 6 inches (153 mm) below grade."	IECC Section **C303.2.1 Protection of exposed foundation insulation** and ASCE 32-01: Design and Construction of Frost Protected Shallow Foundations require that an "opaque and weather-resistant protective covering" for exterior foundation wall insulation extend at least 6 inches below exterior finished grade. This covering is intended to protect against ultraviolet radiation, physical damage, or other sources of deterioration. At depths greater than 6 inches, no protective covering is required. Thus, a minimum depth of 6 inches below finished exterior grade will ensure that exterior vertical insulation installed using this proposed code section remains protected throughout the course of use.
IRC Section R403.3.2	"Horizontal insulation placed less than 12 inches (305 mm) below the ground surface or that portion of horizontal insulation extending outward more than 24 inches (610 mm) from the foundation edge shall be protected against damage by use of a concrete slab or asphalt paving on the ground surface directly above the insulation or by cementitious board, plywood rated for below-ground use, or other *approved* materials placed below ground, directly above the top surface of the insulation."	According to the 2015 IRC Code Commentary, "*this protection for the insulation prevents damage due to excavating (e.g., for landscaping purposes)*." Thus, the proposed protection of insulation as described in Section **R403.3.2Protection of horizontal insulation below ground** is sufficient to ensure protection of the insulation throughout the course of use.

Oxygen index is not currently limited in Chapter 3 of the IRC. However, testing to ASTM C578, which limits the permitted oxygen index of polystyrene insulation materials, is required by Section **R403.3 Frost-protected shallow foundations** for materials used below grade for the purpose of insulating footings against frost. In addition, the acceptance criteria for certain types of foam plastic insulation (AC12: Acceptance Criteria for Foam Plastic Insulation) require testing to ASTM C578. The purpose of this index is to measure the percent of oxygen in air needed to sustain combustion in a candle-like fire. As described

in the standard:

> "The values obtained by the oxygen index test...do not necessarily indicate or describe the fire risk of the materials and are used in this specification primarily to distinguish between insulations formulated with flame retardants and those not so formulated." (ASTM C578-14)

Oxygen index is not indicative of actual fire performance or safety of these materials. In the below grade applications covered by this proposal, the oxygen index of insulation materials is irrelevant. The proposed code section therefore does not limit the permitted oxygen index for insulation installed as specified.

The proponents are aware of concerns that this proposed code change may increase the fire hazard of foam plastic insulation materials during the transportation, storage, and installation stages of the product lifecycle. It is important to note that foam plastics are currently manufactured, transported, stored, and used safely in large quantities without added flame retardants in many other applications. In addition, current practices will maintain fire safety throughout these stages as described below:

- **Transportation:** The U.S. Department of Transportation does regulate the transportation of foam plastics. Special safety measures are not required for the bulk shipment of foam plastics, including food-grade materials and other foam plastics with varying material properties. Approval of the proposed code section will not create a new transportation fire hazard or increase the transportation fire hazards for foam plastic insulation materials.
- **Storage and Installation:** As stated in a 2003 Technical Bulletin from the Alliance for the Polyurethanes Industry, "All organic foam insulations, regardless of whether they contain fire retardants, should be considered combustible and handled accordingly. Certain precautions must be taken to minimize any potential for fire through accidental ignition in handling, storage, and use." The surface burning characteristics required in Section R316.3 are not sufficient to provide fire safety. Approval of the proposed code section will not create new storage and installation fire hazards, and the following practices – which pertain to any combustible or flammable material, not just foam plastics – should be followed regardless of the flame spread index and smoke-developed index of insulation materials on the jobsite
  - In accordance with OSHA Regulations for Occupational Safety and Heath and Construction, worksite storage of foam plastics and other flammable materials should be done safely and in a way that does not block exits. The Alliance for the Polyurethanes Industry recommends that foam boardstock be stored "in limited quantities, in an accessible location, and free from ignition hazards."
  - OSHA regulations also require that hot work adhere to NFPA 51B, which stipulates that activities like welding and cutting should only be performed when appropriate precautions are taken. These include removal or proper protection from sparks, heat, or hot metal of any flammable materials in the vicinity of the work.

The proposed code section is similar in scope to two code change proposals submitted during the 2015 Code Development Cycle (designated FS 170-15 and FS 171-15) that were disapproved by the 2015 IBC-Fire Safety code committee. The proponents have addressed that committee's reasons for disapproval as discussed below:

1. **Committee Reason for disapproval of FS 170-15 and FS 171-15**: Hazards can increase based on misuse of products on the jobsite and during storage and handling of the material to get it manufactured, stored, and delivered to the jobsite. **Response:** This proposal explicitly requires insulation materials manufactured for use under the proposed code section to be labeled for below grade use only. This will enable inspectors and workers to identify foam plastic insulation materials for use with this code section and prevent the accidental installation or misuse of such materials in other, unapproved applications. Furthermore, as discussed above, existing specifications for the safe storage and handling of foam plastics do not differentiate between materials with and without flame retardant chemicals. Flame retardants used in foam plastic insulation may provide only a limited benefit against a narrow range of possible ignition sources. Once ignited, foam plastics with and without flame retardants behave similarly.
2. **Committee Reason for disapproval of FS 170-15 and FS 171-15**: No fire test data has been submitted on the product used in this application – fire can get below ground and protection by the slab or by masonry or concrete wall or foundation may not always be enough.

   Response: This reason statement provides fire test data for the proposed applications. It is important to note that there is no established fire test method for insulation in the configurations covered by this proposed code section. There is also no fire loss history to indicate that these configurations pose a particular fire hazard. As stated in the code commentary for the 2015 IRC Section **R316.5.13 Floors**, "*...in the event of an interior fire, the floor is typically the last building element to be significantly exposed by the fire*." Nevertheless, fire tests were conducted and the results confirmed that protection of insulation by a concrete slab or by a masonry or concrete wall or foundation is more than sufficient to provide fire safety for inhabitants and first responders. The results further demonstrated that insulation installed as allowed by this proposed code section behaved comparably with and without added flame retardants, confirming that current levels of fire safety will be maintained.
3. **Committee Reason for disapproval of FS 170-15 and FS 171-15:** Proposed provision for insulation depth is arbitrary and may allow insulation to become exposed after occupancy, which could then increase flame spread to other portions of the exterior of the building

Response: This proposal provides references for the proposed insulation protection requirements. Depths below grade and additional protection requirements are based on existing standards for protection of below-grade insulation which have already been approved and incorporated into the IRC as adequate for protecting insulation throughout the course of use.

4. **CommitteeReason for disapproval of FS 170-15 and FS 171-15**: Proponents raised a perceived toxicity problem with fire retardant-treated foam plastic but provided no data showing the health risks of fire retardant-treated products.
   Response: This proposal does not ask the code committee to evaluate or to make a decision based on possible health risks of fire retardant-treated products. Rather, it describes specific installation conditions for below-grade foam plastic insulation where fire retardants are not needed to provide fire safety. Because there is no fire safety benefit from the use of flame retardants in insulation in these applications, the code should allow for a choice of insulation materials without flame retardants that can be used safely.

The proposed code section does not prohibit the use of foam plastic insulation that meets the requirements of Section R316.3, nor does it prohibit the use of foam plastic insulation that contains flame retardants. It does not mandate any change to current building practice. Instead, it describes specific applications below-grade where foam plastic insulation that does not contain flame retardants, and therefore does not meet the requirements of Section R316.3, can be safely used if desired. This proposed code section would maintain current levels of fire safety.

Cost Impact: Will not increase the cost of construction
The proposed code change will not require any action that increases construction costs since it does not mandate any change from current practice. Utilizing the proposed code change woul be optional: it would not require any alteration to design or construction practices. The proposed change would enable voluntary manufacture and use of alternative foam plastic insulation products that do not contain flame retardant chemicals. The cost of using these alternative insulation products may be higher, lower, or the same as the cost of using currently available insulation depending on formulation costs, production volumes, consumer demand, and level of competition.

RB152-16 :
R316.5.14 (NEW)-
LINDEMAN12127

Public Hearing Results

Committee Action: **Disapproved**

Committee Reason: The committee is concerned that the lack of labeling requirements in the proposal and the reason statement creates a possibility that similar foam products could be mixed up in the field. Those working in the field need to be able to readily pick the right product for each application. In addition, testing by a third party accredited laboratory should be required. That said, the committee encourages the proponents to continue to develop these requirements.

Assembly Action: **None**

Analysis: This code change proposal was initially placed on the ballot for an assembly motion. Upon further review, it was discovered that the motion did not receive a second. Therefore the proposal was removed from the ballot.

Individual Consideration Agenda

Public Comment 1:

Proponent : Avery Lindeman, Green Science Policy Institute, representing Green Science Policy Institute (avery@greensciencepolicy.org); David Eisenberg, DCAT, representing Development Center for Appropriate Technology; Martin Hammer, representing Martin Hammer, Architect (mfhammer@pacbell.net); Donald Lucas, Lwrence Berkeley National Laboratory (d_lucas@lbl.gov); Paul Wermer, representing self (paul@pw-sc.com); Vytenis Babrauskas, representing Fire Science and Technology Inc.; Veena Singla, representing Natural Resources Defense Council (vsingla@nrdc.org); Tom Lent, representing Healthy Building Network (tlent@healthybuilding.net); Jonathan Wilson (jwilson@nchh.org); Tom Neltner, Environmental Defense Fund (tneltner@edf.org); Suzanne Drake, representing Perkins+Will (suzanne.drake@perkinswill.com); Dennis Murphy, representing US Green Building Council California (dennis@usgbc-california.org); Russ Pitkin, representing SERA Architects, Inc. (russp@serapdx.com); Jan Willemse, representing ZGF Architects LLP; Marjorie Smith, Siegel & Strain Architects, representing Siegel & Strain Architects (Msmith@siegelstrain.com); Tony Stefani, San Francisco Firefighters Cancer

Prevention Foundation, representing San Francisco Firefighters Cancer Prevention Foundation (stefanit@sbcglobal.net); Andrea Traber, representing Integral Group (atraber@integralgroup.com) requests Approve as Modified by this Public Comment.

Modify as Follows:

2015 International Residential Code

R316.5.14 Below grade use. Foam plastic insulation board for use below grade shall not be required to meet the flame spread index and smoke-developed index criteria of Section R316.3 and shall not be subject to oxygen index limits provided that ~~it is marked for below grade use only and is installed in accordance with one~~ all of the following are satisfied:

~~1. The insulation is located between a concrete slab on grade and its subgrade.~~

~~2. The insulation is separated from the building interior by a masonry or concrete wall or foundation. Such insulation installed vertically shall be not less than 6 inches (152 mm) below finished exterior grade. Where installed horizontally, it shall be protected in accordance with Section R403.3.2.~~

1. The insulation is tested in accordance with ASTM C578, ASTM C1289, ASTM C591, or other standard specification for physical properties of foam plastic insulation boards. Testing for flame spread, smoke-developed, and limiting oxygen indexes shall not be required.
2. In addition to the requirements of Section R316.2, the words "FOR BELOW-GRADE USE ONLY - Not Tested for Flame Spread Index or Smoke-Developed Index" shall be printed on both faces in red lettering not less than 1 inch (25 mm) in height, repeated continuously across the panel, with not more than 12 inches (305mm) between lines of text.
3. The insulation is installed in accordance with one of the following:
   - 3.1. The insulation is located between a concrete slab-on-grade and its subgrade,
   - 3.2. The insulation is installed horizontally, separated from the building interior by a masonry or concrete wall or foundation, and protected as described in Section R403.3.2, or
   - 3.3. The insulation is installed vertically not less than 6 inches (152 mm) below finished exterior grade and is separated from the building interior by a masonry or concrete wall or foundation.

Commenter's Reason: This Public Comment modifies the original proposal to address feedback from the 2016 IRC-Building Code Committee and stakeholders. If approved, it would maintain fire safety and increase consumer choice of insulation products for safe use below-grade. This proposal would not require any change to current building practice. It would instead enable voluntary manufacture and use of insulation without flame retardants in the specified below-grade applications.

While this modified proposal is similar in scope to previous proposals for the IRC and IBC that have been disapproved, the 2016 IRC-Building Code Committee encouraged the continued development of this proposal, as documented in the Report of the Committee Action Hearing. The proponents have addressed that committee's reasons for disapproval, as discussed below:

- **Committee Reason for disapproval of RB 152-16**: There is a lack of labeling requirements in the proposal, leading to the possibility that similar foam products could be mixed up in the field. Those working in the field need to be able to readily pick the right product for each application.**v**

  Response: This Public Comment adds a new subsection to the proposal (R316.5.14.2) which explicitly requires insulation materials to be extensively labeled for below grade use only. The proposed labeling will make it easy for workers and inspectors to identify foam plastic insulation materials for use with this code section and therefore prevent the accidental installation or misuse of such materials in other (unapproved) applications. The proposed labeling will not conflict with other, existing labeling and identification requirements and practices for foam plastic insulation board.

- **Committee Reason for disapproval of RB 152-16**: Testing by a third-party accredited laboratory should be required.

  Response: This Public Comment adds a new subsection to the proposal (R316.5.14.1) which requires that materials manufactured for use with this section be tested to existing standards for foam plastic insulation to characterize physical properties such as compressive strength, density, thermal resistance, water absorption, and others important for the specified below-grade applications. Materials already in use in these applications are routinely tested to these same standards as part of the Acceptance Criteria for Foam Plastic Insulation (AC12). Adding subsection R316.5.14.1 to this proposal clarifies the appropriate testing and characterization of foam plastic insulation materials for use with this code section, which in turn enables the safe and proper use of foam plastic insulation without flame retardants below grade.

  This proposal maintains the existing expectations of appropriate labeling and listing. The language in IRC **R316.2 Identification and labeling**, together with the definition of "*listed and approved agency"* in Chapter 2 of the IRC, is unambiguous in requiring that the material be tested by an approved agency and found suitable for a specified purpose.

Testing for Flame Spread Index, Smoke-Developed Index, and Limiting Oxygen Index are not required for the applications covered in this proposal for the following reasons:

- There is no fire loss history to indicate that the configurations covered by this proposal pose a fire hazard. As stated in the code commentary for the 2015 IRC Section **R316.5.13 Floors**, "*...in the event of an interior fire, the floor is typically the*

last building element to be significantly exposed by the fire." Similarly, insulation installed below grade and separated from the building interior by a masonry or concrete wall or foundation poses no reasonable fire hazard.

- IRC **Section R316.6 Specific Approval** allows for the use of insulation that does not comply with the Flame Spread or Smoke-Developed Index requirements of R316.3 provided that it has been approved based on "fire tests related to actual end-use configurations." Because there is no fire loss history or reasonable expectation of a fire hazard for the configurations covered by this proposal, no accepted fire test methods exist for these end-use configurations. However, fire tests simulating these applications have been conducted, and the results confirm that protection of insulation by a concrete slab, masonry or concrete wall or foundation, or as specified by R403.3.2 provides sufficient fire safety for inhabitants and emergency responders. Furthermore, test results were comparable for insulation with and without flame retardants when installed as allowed by this proposal. Protocols and results of this testing are summarized in an accompanying document (Lindeman 2016).
- Oxygen index is not currently limited in Chapter 3 of the IRC. However, testing to ASTM C578 would be required for the applications outlined in proposed section R316.5.14.3 when this code section is voluntarily utilized. Testing to ASTM C578 is already required by Section **R403.3 Frost-protected shallow foundations** for materials used below grade for the purpose of insulating footings against frost – a possible application of this proposal. In addition, the acceptance criteria for certain types of foam plastic insulation (AC12: Acceptance Criteria for Foam Plastic Insulation) require testing to ASTM C578. ASTM C578 limits the permitted oxygen index of polystyrene insulation materials. The purpose of this index is to measure the percent of oxygen in air needed to sustain combustion in a candle-like fire. Oxygen index is not indicative of actual fire performance or safety of insulation materials. In the below grade applications covered by this proposal, the oxygen index of insulation materials is irrelevant. The proposed code section therefore does not limit the permitted oxygen index for insulation installed as specified, and this enables polystyrene insulation without flame retardants to be among the materials suitable for use in these applications.As described in the standard:

  > "The values obtained by the oxygen index test...do not necessarily indicate or describe the fire risk of the materials and are used in this specification primarily to distinguish between insulations formulated with flame retardants and those not so formulated." (ASTM C578-14)

Additional Considerations:

- Foam plastic insulation without added flame retardants is currently manufactured in Europe and approved for use in a number of applications including those covered by this proposal. Flame spread and smoke developed indexes can and have been measured for some of these materials. Flame spread index was measured at approximately 200, and smoke-developed index was measured in the range of approximately 700 – 850 (Lindeman 2016). To the commenters' knowledge, the availability and widespread use of such materials in Scandinavia has not resulted in an increase in fire incidents on the job site or throughout the product lifecycle.
- Opponents have commented that the availability of below-grade foam plastic insulation would significantly increase hazards during storage and transportation of these materials. However, foam plastic without added flame-retardants is used extensively in other applications in the U.S., such as for food-contact materials and cushioning for packaging. Our research found no evidence of unresolved safety issues pertaining to the storage and transportation of such materials.
  - **A significant portion of foam plastic polystyrene manufactured in the U.S. does not contain flame-retardants.** In June we contacted a number of different food service and other packaging companies about whether or not their products contained flame retardants. Seven companies responded that their foam polystyrene products do not contain flame retardants, including all of the food service packaging companies. We also screened samples of 14 different kinds of polystyrene foam packaging and food service products from eight different brands, none of which were found to contain flame retardants. This suggests that most – if not all – polystyrene foam food service and many packaging products in the U.S. do not contain flame retardant chemicals. In 2015, an estimated 1.3 billion pounds of extruded polystyrene (XPS) and expanded polystyrene (EPS) (40% of the North American polystyrene foam market) were manufactured for use as packaging and food service and based on our research were unlikely to contain flame-retardants (Forman 2015).
  - **Foam polystyrene without flame retardants is already considered safe to store and transport in large quantities.** We also contacted manufacturers who transport and store flame retardant-free foamed polystyrene products in large quantities (e.g., 25 million pound/year at a single facility). After manufacturing and conditioning to reduce concentrations of the blowing agent (e.g., pentane), the materials are not considered hazardous to transport. The U.S. Department of Transportation does not restrict shipping of such materials, and shipments from factories to regional distribution centers are done in fully loaded semi-trailer trucks. Other codes already include requirements for proper rack clearances and sizing of sprinkler systems for high-rack storage of foam plastics. The Fire Code covers appropriate storage of foam plastic insulation on-site and considers a wide range of combustible materials. The existing Fire Code requirements are sufficient even in the event that foam plastic insulation board without flame retardants is present on site.
- Proposed insulation protection requirements (including depths below grade) are based on existing standards for protection of below-grade insulation which have already been approved and incorporated into the IRC. These requirements are

considered adequate for protecting insulation throughout the course of use, and are described in detail in the original Reason Statement for RB152-16 submitted in January 2016. **Figures 1 and 2** depict examples of installations where the proposed code section could be applied. These include insulation between a concrete slab-on-grade and its subgrade and exterior insulation for basement and foundation walls and frost-protected shallow foundations.

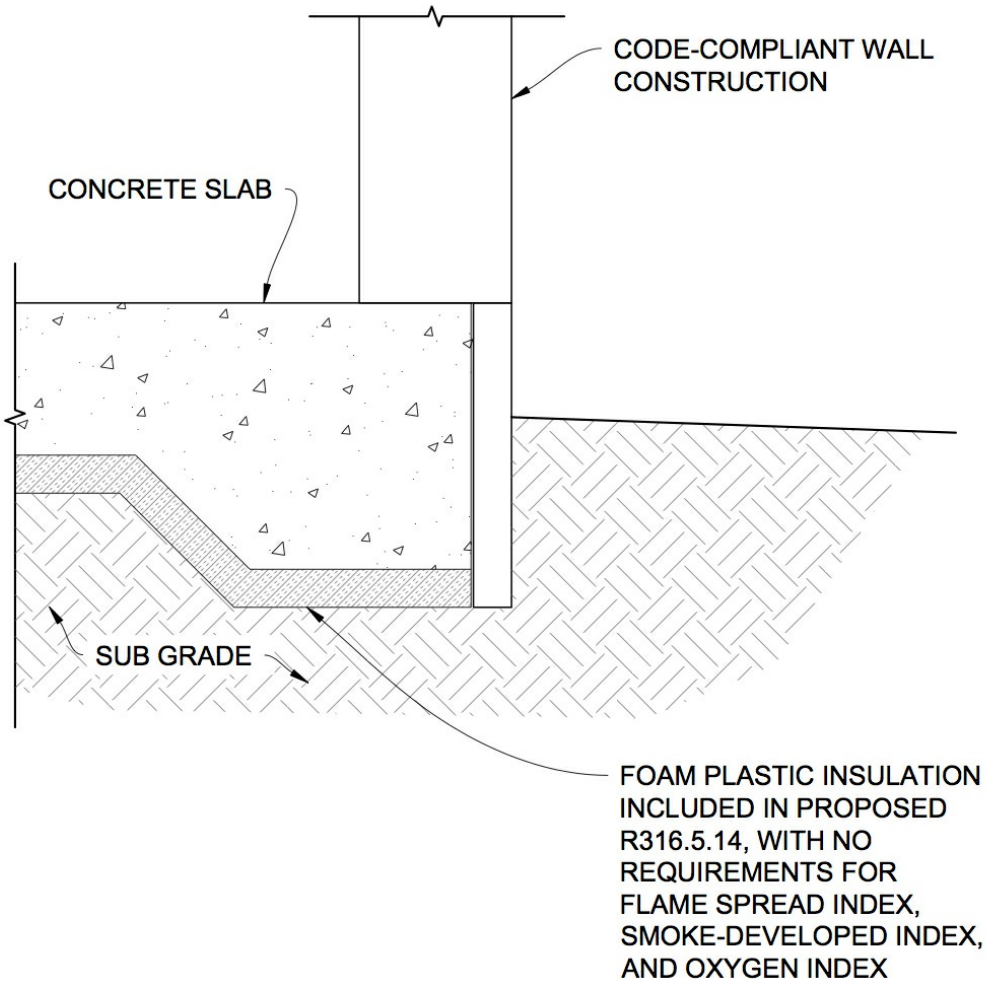

Figure 1: UNDER-SLAB BELOW-GRADE INSULATION

Proposed Code Section R316.5.14

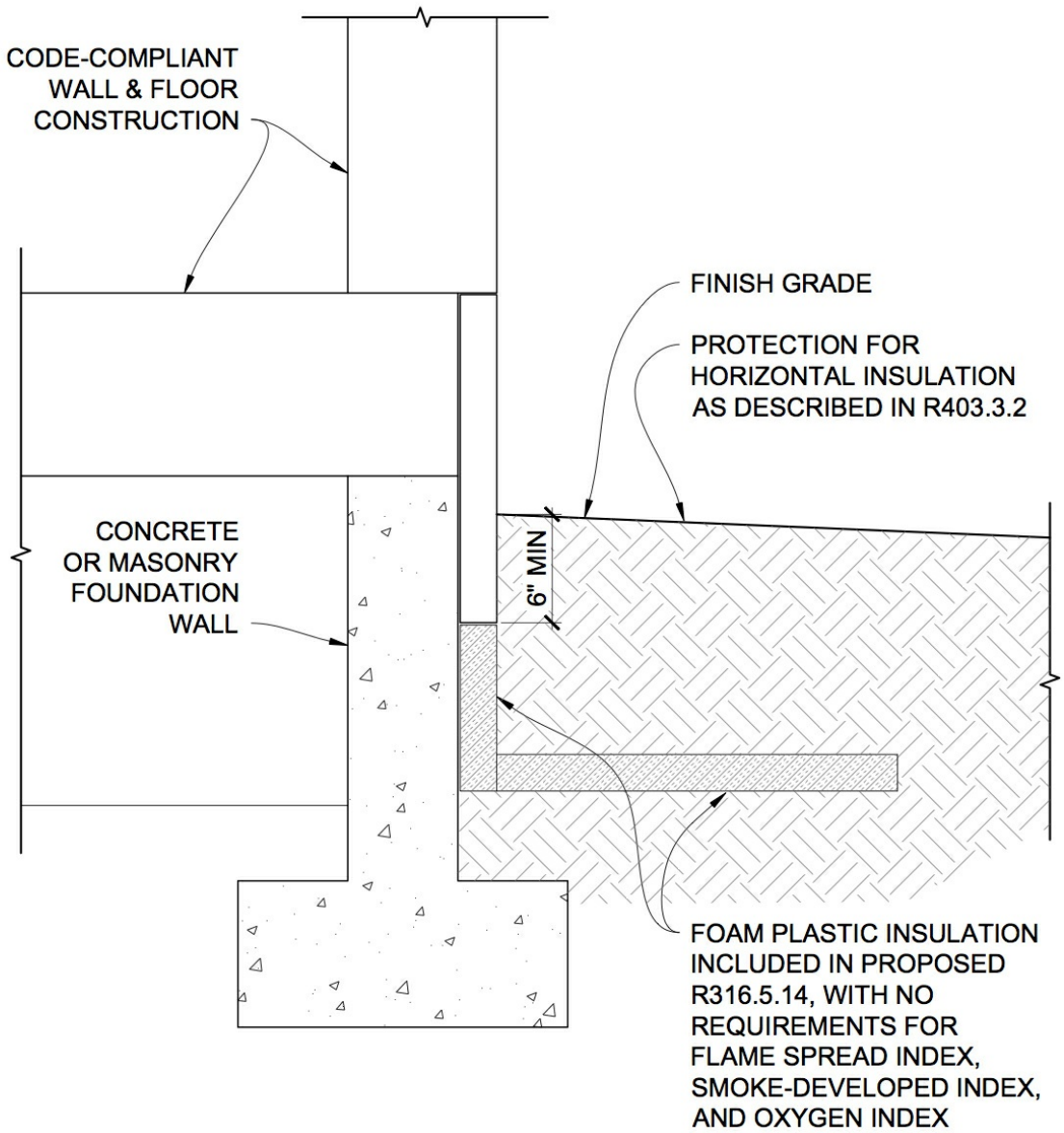

Figure 2: EXTERIOR BELOW-GRADE INSULATION

Proposed Code Section R316.5.14

This proposal does not ask for an evaluation of possible health risks of fire retardant-treated products. Rather, it describes specific installation conditions for below-grade foam plastic insulation where fire retardants are not needed to provide fire safety. Because there is no fire safety benefit from the use of flame retardants in insulation in these applications, the code should allow for a choice of insulation materials without flame retardants.

This proposal further provides comprehensive testing and labeling requirements for below-grade insulation produced without flame retardants to ensure that such materials possess the necessary properties for below-grade use and that improper use can be easily identified and corrected or prevented in the field.

Bibliography: Lindeman A., Lucas D., and Rich D. (2016) *Can foam plastic insulation without flame retardants be used safely below grade?* Accessible at: http://saferinsulation.org/wp-content/uploads/2016/07/RB152-16_Public-Comment_White-Paper.pdf
Forman C. (2015) *Polymeric Foams.* BCC Research, Report Code PLS008H. Accessed through University of California Library.

Proponent : Jay West, representing American Chemistry Council requests Disapprove.

Commenter's Reason: The Energy Efficient Foam Coalition supports the results of the Committee Action Hearing to disapprove RB 152-16. The proposal would reduce fire safety during transportation, storage, and construction. As noted multiple times in testimony, there are significant concerns around the potential misuse of non-flame retarded insulation when both certified and non-flame retarded foam insulation products are on the same job site. In fact, proponents' schematics fail to differentiate clearly between foam insulation that would be exempt from the requirements of R316 and those that would not (see Figure A). Furthermore, the International Association of Building Officials testified that the proposal fails to provide sufficient information for code officials to conduct proper inspections. Finally, the fire demonstrations described by the proponents showed instances where the non-fire retarded foam ignited and the fire-retarded foam did not ignite, despite proponents' assurances that there is no fire safety issue in a below-grade scenario. The demonstrations were not conducted in an accredited, third-party testing environment and were not representative of the broad range of fire safety risks the proposal could introduce.

Figure A. ***Proponents' schematics do not clearly and unambiguously show where to use flame-retarded and non-flame retarded insulation. RB 152-16 mixes foam plastic insulation products that meet the basic 75 flame spread index/450 smoke developed index (shown vertically) with foam insulation products with UNLIMITED flame spread/smoke developed indices. Foam insulation in the locations noted by the arrows below MUST meet the 75/450 ASTM E84 requirements.***

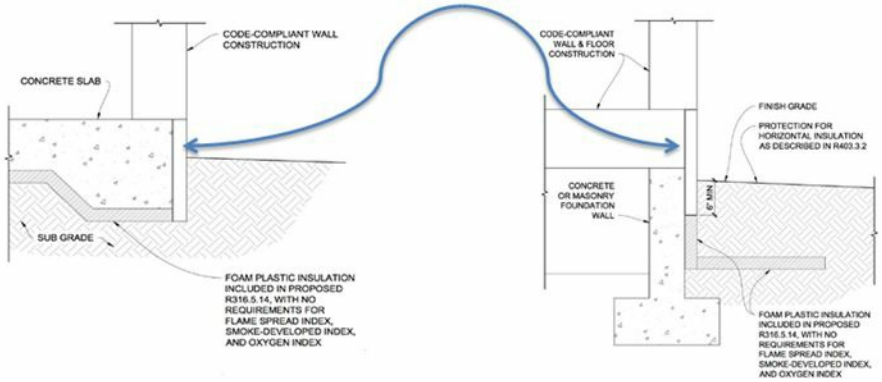

Figure 1 on page RB 281 and Figure 2 on page RB 282. Excerpted from IRC-Building: 2016 Group B Committee Action Hearing; Copyright 2016, Washington, DC: International Code Council. Reproduced with permission. All rights reserved. www.ICCSAFE.org.

RB152-16

RB157-16

IRC: R301.2.4, R301.2.4.1, R322.1, R322.1.1, R322.3, R322.3.1, R322.3.2, R322.3.3, R322.3.4, R322.3.5, R322.3.5.1, R322.3.6, R322.3.7.

Proposed Change as Submitted

Proponent : Gregory Wilson (gregory.wilson2@fema.dhs.gov); Rebecca Quinn, representing Federal Emergency Management Agency (rcquinn@earthlink.net)

2015 International Residential Code

Revise as follows:

R301.2.4 Floodplain construction. Buildings and structures constructed in whole or in part in flood hazard areas (including A or V Zones) as established in Table R301.2(1), and substantial improvement and restoration of substantial damage of buildings and structures in flood hazard areas, shall be designed and constructed in accordance with Section R322. Buildings and structures that are located in more than one flood hazard area shall comply with the provisions associated with the most restrictive flood hazard area. Buildings and structures located in whole or in part in identified floodways , coastal high hazard areas, and Coastal A Zones shall be designed and constructed in accordance with ASCE 24.

R301.2.4.1 Alternative provisions. As an alternative to the requirements in Section ~~R322~~ R322.2, ASCE 24 is permitted subject to the limitations of this code and the limitations therein.

R322.1 General. Buildings and structures constructed in whole or in part in flood hazard areas, including A or V Zones and Coastal A Zones, as established in Table R301.2(1), and substantial improvement and restoration of substantial damage of buildings and structures in flood hazard areas, shall be designed and constructed in accordance with the provisions contained in this section. Buildings and structures that are located in more than one flood hazard area shall comply with the provisions associated with the most restrictive flood hazard area. Buildings and structures located in whole or in part in identified floodways , coastal high hazard areas, and Coastal A Zones shall be designed and constructed in accordance with ASCE 24.

R322.1.1 Alternative provisions. As an alternative to the requirements in Section ~~R322~~ R322.2, ASCE 24 is permitted subject to the limitations of this code and the limitations therein.

R322.3 Coastal high-hazard areas (including V Zones and Coastal A Zones, where designated). Areas that have been determined to be subject to wave heights in excess of 3 feet (914 mm) or subject to high-velocity wave action or wave-induced erosion shall be designated as coastal high-hazard areas. Flood hazard areas that have been designated as subject to wave heights between $1^1/_2$ feet (457 mm) and 3 feet (914 mm) or otherwise designated by the jurisdiction shall be designated as Coastal A Zones. Buildings and structures constructed in whole or in part in coastal high-hazard areas and coastal A Zones, where designated, shall be designed and constructed in accordance with ~~Sections R322.3.1 through R322.3.7~~ the applicable requirements of R322.1, ASCE 24, and this section.

Delete without substitution:

~~**R322.3.1 Location and site preparation.**~~

1. ~~New buildings and buildings that are determined to be substantially improved pursuant to Section R105.3.1.1 shall be located landward of the reach of mean high tide.~~
2. ~~For any alteration of sand dunes and mangrove stands, the *building official* shall require submission of an engineering analysis that demonstrates that the proposed *alteration* will not increase the potential for flood damage.~~

~~**R322.3.2 Elevation requirements.**~~

1. ~~Buildings and structures erected within coastal high-hazard areas and Coastal A Zones, shall be elevated so that the bottom of the lowest horizontal structural members supporting the lowest floor, with the exception of piling, pile caps, columns, grade beams and bracing, is elevated to or above the base flood elevation plus 1 foot (305 mm) or the design flood elevation, whichever is higher.~~
2. ~~Basement floors that are below *grade* on all sides are prohibited.~~
3. ~~The use of fill for structural support is prohibited.~~
4. ~~Minor grading, and the placement of minor quantities of fill, shall be permitted for landscaping and for drainage purposes under and around buildings and for support of parking slabs, pool decks, patios and walkways.~~
5. ~~Walls and partitions enclosing areas below the design flood elevation shall meet the requirements of Sections R322.3.4 and R322.3.5.~~

~~**R322.3.3 Foundations.** Buildings and structures erected in coastal high-hazard areas and Coastal A Zones shall be supported on pilings or columns and shall be adequately anchored to such pilings or columns. The space below the elevated building shall be either free of obstruction or, if enclosed with walls, the walls shall meet the requirements of Section R322.3.4. Pilings shall have adequate soil penetrations to resist the combined wave and wind loads (lateral and uplift). Water-loading values used shall be those associated with the design flood. Wind-loading values shall be those required by this code. Pile embedment shall include consideration of decreased resistance capacity caused by scour of soil strata surrounding the piling.~~

~~Pile systems design and installation shall be certified in accordance with Section R322.3.6. Spread footing, mat, raft or other foundations that support columns shall not be permitted where soil investigations that are required in accordance with Section R401.4 indicate that soil material under the spread footing, mat, raft or other foundation is subject to scour or erosion from wave-velocity flow conditions. If permitted, spread footing, mat, raft or other foundations that support columns shall be designed in accordance with ASCE 24. Slabs, pools, pool decks and walkways shall be located and constructed to be structurally independent of buildings and structures and their foundations to prevent transfer of flood loads to the buildings and structures during conditions of flooding, scour or erosion from wave-velocity flow conditions, unless the buildings and structures and their foundations are designed to resist the additional flood load.~~

- ~~**Exception:** In Coastal A Zones, stem wall foundations supporting a floor system above and backfilled with soil or gravel to the underside of the floor system shall be permitted provided the foundations are designed to account for wave action, debris impact, erosion and local scour. Where soils are susceptible to erosion and local scour, stem wall foundations shall have deep footings to account for the loss of soil.~~

~~**R322.3.4 Walls below design flood elevation.** Walls and partitions are permitted below the elevated floor, provided that such walls and partitions are not part of the structural support of the building or structure and:~~

1. ~~Electrical, mechanical and plumbing system components are not to be mounted on or penetrate through walls that are designed to break away under flood loads; and~~
2. ~~Are constructed with insect screening or open lattice; or~~
3. ~~Are designed to break away or collapse without causing collapse, displacement or other structural damage to the elevated portion of the building or supporting foundation system. Such walls, framing and connections shall have a resistance of not less than 10 (479 Pa) and not more than 20 pounds per square foot (958 Pa) as determined using allowable stress design; or~~
4. ~~Where wind loading values of this code exceed 20 pounds per square foot (958 Pa), as determined using allowable stress design, the *construction documents* shall include documentation prepared and sealed by a registered *design professional* that:~~
   - ~~4.1. The walls and partitions below the design flood elevation have been designed to collapse from a water load less than that which would occur during the base flood.~~
   - ~~4.2. The elevated portion of the building and supporting foundation system have been designed to withstand the effects of wind and flood loads acting simultaneously on structural and nonstructural building components. Water-loading values used shall be those associated with the design flood. Wind-loading values shall be those required by this code.~~
5. ~~Walls intended to break away under flood loads as specified in Item 3 or 4 have flood openings that meet the criteria in Section R322.2.2, Item 2.~~

~~**R322.3.5 Enclosed areas below design flood elevation.** Enclosed areas below the design flood elevation shall be used solely for parking of vehicles, building access or storage.~~

~~**R322.3.5.1 Protection of building envelope.** An exterior door that meets the requirements of Section R609 shall be installed at the top of stairs that provide access to the building and that are enclosed with walls designed to break away in accordance with Section R322.3.4.~~

Revise as follows:

R322.3.6 Construction documents. The *construction documents* shall include documentation that is prepared and sealed by a registered *design professional* that the design and methods of construction to be used meet the applicable criteria of ~~this section~~ ASCE 24.

R322.3.7 Tanks. Underground tanks shall be anchored to prevent flotation, collapse and lateral movement under conditions of the base flood. Above-ground tanks shall be installed at or above the elevation required in ~~Section R322.3.2~~ ASCE 24. Where elevated on platforms, the platforms shall be cantilevered from or knee braced to the building or shall be supported on foundations that conform to the requirements of ~~Section R322.3~~ ASCE 24.

Reason: The IRC Section R322.3.6 requires documentation signed and sealed by registered design professionals that dwellings in coastal high hazard areas (Zone V) and Coastal A Zones (if the Limit of Moderate Wave Action is delineated on the Flood Insurance Rate Map or otherwise designed by the community) meet the applicable criteria. ASCE 24 Flood Resistant Design and Construction is the standard of practice for construction in flood hazard areas.
ASCE 24 already is a referenced standard in the IRC: Section R301.2.4.1 and R322.1.1 permit use of ASCE 24 as an alterative to the prescriptive provisions of R322, and Section R322.3.3 requires spread footings, mats, rafts, or other foundation sthat support columns to be designed in accordance with ASCE 24.

The IRC requires engineering design or prescriptive engineering-based referenced standards for other high-hazard areas such as some high wind regions and areas where seismic design category E is identified. This proposal is similar in that it replaces the specific design requirements of R322.3 with reference to ASCE 24. A side-by-side comparison of the two sets of requirements was prepared, with the conclusion the differences are not substantive, in large part because several changes

approved for the 2015 IRC were based on consistency with the 2014 edition of ASCE 24. One clear difference is ASCE 24 specifies shear walls, which are not permitted by Section R322.3.3 but may be appropriate for some townhomes to resist lateral loads in areas with seismic or high wind conditions.

Two subsections are proposed to be retained -- and renumbered (renumbering not shown in proposal). Section R322.3.6 Construction documents (renumbr to R322.3.2) is retained to meet the NFIP requirement that dwellings in coastal high hazard areas be designed and sealed by registered design professionals (renumber to R322.3.1). Section R322.3.7 Tanks (renumber to R322.3.3), is retained because it has the an option to cantilever or knee-brace platforms to the building is not explicit in ASCE 24 (nor it is precluded).

NOTE: six sections are proposed to be deleed without substitution; however, those sections have notes "No change to text."

Cost Impact: Will not increase the cost of construction
The IRC already requires dwellings in coastal high hazard areas and Coastal A Zones to be prepared by registered design professionals. ASCE 24 provides more flexibility in design and that flexibility may result in some cost savings for some dwellings.

RB157-16 : R301.2.4-WILSON12101

Public Hearing Results

Committee Action: **Disapproved**

Committee Reason: Coastal V Zones, through the last 15 years, through all of the hurricanes and flooding, the prescriptive that currently exist were great.

Assembly Action: **None**

Individual Consideration Agenda

Proponent : Scott Campbell, representing Portland Cement Association (scampbell@cement.org) requests Approve as Submitted.

Commenter's Reason: This proposal explicitly brings Coastal A Zones and coastal high hazard areas under the requirements of ASCE 24 and Section R322.1 of the IRC. With the expected increase in hurricane and other coastal flooding activity, properly designing structures in all affected regions is critical. By replacing the current prescriptive language in the IRC with the corresponding requirements in ASCE 24 the proposed change is ensuring that the IRC reflects the properly technically vetted design provisions for flooding developed in the ANSI accredited ASCE standards development process.

RB157-16

RB158-16
IRC: R301.2.4.1, R322.1.1.

Proposed Change as Submitted

Proponent : Gregory Wilson (gregory.wilson2@fema.dhs.gov); Rebecca Quinn, representing Federal Emergency Management Agency (rcquinn@earthlink.net)

2015 International Residential Code

Revise as follows:

R301.2.4.1 Alternative provisions. As an alternative to the requirements in Section R322, ASCE 24 is permitted subject to the limitations of this code and the limitations therein. ASCE 24 is permitted as an alternative in alluvial fan flooding areas, as defined in ASCE 24.

R322.1.1 Alternative provisions. As an alternative to the requirements in Section R322, ASCE 24 is permitted subject to the limitations of this code and the limitations therein. ASCE 24 is permitted as an alternative in alluvial fan flooding areas, as defined in ASCE 24.

Reason: This proposal clarifies a specific situation in which both communities and applicants may want to use ASCE 24 instead of the prescriptive provisions of Section R322 because alluvial fan flooding areas are consisted especially high risk areas.
Alluvial fans are fan-shaped deposits of sediment eroded from steep slopes and watersheds and deposited on valley floors. Flooding on alluvial fans typically does not have a well-defined flow path, typically has rapid onset, usually has high velocity flows, and is usually accompanied with large amounts of sediment and debris. Most alluvial fans are found along the base of mountain fronts in the western states where infrequent but intense storms typical of arid and semi-arid climates combine with abrupt changes in topography to create formation of alluvial fans. Areas subject to alluvial fan flooding are hazardous, especially when the processes that form alluvial fans are active. On Flood Insurance Rate Maps, areas subject to alluvial fan flooding are identified as Zone AO and both anticipated depth of water and velocity are specified.

ASCE 24 Section 3.2 allows construction in portions areas subject to alluvial fan flooding that are not at the apex of alluvial fans, not in the active meandering flow path, and not where there is evidence of active processes, including braided channels, erratic flow paths, and sediment transport. ASCE 24 commentary notes other characteristics of active processes and indicates active areas are identified by reviewing physical features, topographic data, aerial photography, historical event data, personal observations, and the experience and knowledge of local officials.

In areas where construction is allowed, in addition to the requirements of ASCE 24 Chapter 1 and Chapter 2, ASCE 24 Section 3.2 requires foundations to be designed and constructed to resist all flood loads, including the effects of scour based on the higher of the velocity identified on the flood hazard map or five feet per second. Because of high velocity, scour, and sediment and debris load, it is appropriate that foundations in these high-risk areas be designed to account for site-specific conditions.

Cost Impact: Will increase the cost of construction
The increased cost is balanced by reduction in vulnerability to future alluvial fan flooding, shifting supporting soils, and heavy sediment loads. Design of foundations requires the services of a registered design professional to determine site-specific conditions and to account for those conditions in the design. Designed foundations likely have deeper footings and more robust foundation walls than if prescriptive foundation specifications are allowed. Some cost savings may be gained by use of piers with deep footings, rather than perimeter walls. Pier foundations have the added benefit of avoiding build-up of transported sediment against perimeter walls.

RB158-16 :
R301.2.4.1-
WILSON12786

Public Hearing Results

Committee Action: **Disapproved**

Committee Reason: This adds additional references to ASCE 24. This should be a stand alone code. In the areas where there are issues, the engineers know where to go for information. This is redundant information.

Assembly Action: **None**

Individual Consideration Agenda

Proponent : Scott Campbell, representing Portland Cement Association (scampbell@cement.org) requests Approve as Submitted.

Commenter's Reason: This proposal clarifies the ability to use ASCE 24 in alluvial fan flooding areas. The code currently allows for use of ASCE 24 in lieu of the requirements of Section R322. The proposal makes it explicit that the alternative of ASCE 24 is allowed in alluvial fan flooding areas, which are generally considered to be high risk.

RB158-16

RB159-16
IRC: R322.3.3.

Proposed Change as Submitted

Proponent : Gregory Wilson (gregory.wilson2@fema.dhs.gov); Rebecca Quinn, representing Federal Emergency Management Agency (rcquinn@earthlink.net)

2015 International Residential Code

Revise as follows:

R322.3.3 Foundations. Buildings and structures erected in coastal high-hazard areas and Coastal A Zones shall be supported on pilings or columns and shall be adequately anchored to such pilings or columns and comply with the following:
1. The space below the elevated building shall be either free of obstruction or, if enclosed with walls, the walls shall meet the requirements of Section R322.3.4.
2. Pilings shall have adequate soil penetrations to resist the combined wave and wind loads (lateral and uplift)~~. Water-loading values used shall be those associated with the design flood. Wind-loading values shall be those required by this code. Pile~~ and pile embedment shall include consideration of decreased resistance capacity caused by scour of soil strata surrounding the piling.~~ Pile systems design~~
3. Columns and ~~installation~~ their supporting foundations shall be ~~certified in accordance with Section R322.3.6~~ designed to resist combined wave and wind loads (lateral and uplift) and shall include consideration of decreased capacity caused by scour of soil strata surrounding the column. Spread footing, mat, raft or other foundations that support columns shall not be permitted where soil investigations that are required in accordance with Section R401.4 indicate that soil material under the spread footing, mat, raft or other foundation is subject to scour or erosion from wave-velocity flow conditions. If permitted, spread footing, mat, raft or other foundations that support columns shall be designed in accordance with ASCE 24.
4. Flood and wave loads shall be those associated with the design flood. Wind loads shall be those required by this code.
5. Foundation designs and construction documents shall be prepared and sealed in accordance wtih Section R322.3.6.
6. Slabs, pools, pool decks and walkways shall be located and constructed to be structurally independent of buildings and structures and their foundations to prevent transfer of flood loads to the buildings and structures during conditions of flooding, scour or erosion from wave-velocity flow conditions, unless the buildings and structures and their foundations are designed to resist the additional flood load.

> **Exception:** In Coastal A Zones, stem wall foundations supporting a floor system above and backfilled with soil or gravel to the underside of the floor system shall be permitted provided the foundations are designed to account for wave action, debris impact, erosion and local scour. Where soils are susceptible to erosion and local scour, stem wall foundations shall have deep footings to account for the loss of soil.

Reason: Section R322.3.3 allows the use of pilings or columns, but specific requirements are identified only for pilings, without equivalent specificity for columns. The primary object of this proposal is to provide that specificity. Second, the current text is long, so the proposal breaks it into distinct numbered items which makes it easier to read.

Cost Impact: Will not increase the cost of construction
No cost impact associated with the added text for columns because the text is clarifying only and column foundations already are required to be designed by registered design professionals

RB159-16 :
R322.3.3-
WILSON12102

Public Hearing Results

Committee Action: **Disapproved**

Committee Reason: The use of language such as "suspect" and "erosion areas" is undesirable.

Assembly Action: **None**

Individual Consideration Agenda

Proponent : Scott Campbell, representing Portland Cement Association (scampbell@cement.org) requests Approve as Submitted.

Commenter's Reason: This proposal clarifies language in the code to include columns as originally intended, and reorganizes the provision using a numbered list to improve clarity. The Committee Reason statement objects to wording such

as "suspect" and "erosion area" that are part of the current provision and are not changed by the proposal. There are no actual technical changes or impacts on construction costs as part of this proposal, but the clarification provided will be beneficial to users of the code.

Proponent : Gregory Wilson, FEMA (gregory.wilson2@fema.dhs.gov); Rebecca Quinn, representing Federal Emergency Management Agency requests Approve as Submitted.

Commenter's Reason: The motion to disapprove objected to "scour and erosion" which, along with the requirement to consider decreased resistance capacity caused by scour, has been in this section since the first edition IRC. This proposal does not change it. In flood hazard areas subject to waves, it is critical that scour and erosion be anticipated by piling and column designs. Section R322.3.3 allows the use of pilings or columns, but specific requirements are identified only for pilings, without equivalent specificity for columns – it does not create new requirements for columns. The primary object of this proposal is to provide that specificity. Second, the current text is long, so the proposal breaks it into distinct numbered items which makes it easier to read.

RB159-16

RB160-16

IRC: R322.3.3, R322.3.4 (New).

Proposed Change as Submitted

Proponent : Gregory Wilson (gregory.wilson2@fema.dhs.gov); Rebecca Quinn, representing Federal Emergency Management Agency (rcquinn@earthlink.net)

2015 International Residential Code

Revise as follows:

R322.3.3 Foundations. Buildings and structures erected in coastal high-hazard areas and Coastal A Zones shall be supported on pilings or columns and shall be adequately anchored to such pilings or columns. The space below the elevated building shall be either free of obstruction or, if enclosed with walls, the walls shall meet the requirements of Section R322.3.4. Pilings shall have adequate soil penetrations to resist the combined wave and wind loads (lateral and uplift). Water-loading values used shall be those associated with the design flood. Wind-loading values shall be those required by this code. Pile embedment shall include consideration of decreased resistance capacity caused by scour of soil strata surrounding the piling. Pile systems design and installation shall be certified in accordance with Section R322.3.6. Spread footing, mat, raft or other foundations that support columns shall not be permitted where soil investigations that are required in accordance with Section R401.4 indicate that soil material under the spread footing, mat, raft or other foundation is subject to scour or erosion from wave-velocity flow conditions. If permitted, spread footing, mat, raft or other foundations that support columns shall be designed in accordance with ASCE 24. ~~Slabs, pools, pool decks and walkways shall be located and constructed to be structurally independent of buildings and structures and their foundations to prevent transfer of flood loads to the buildings and structures during conditions of flooding, scour or erosion from wave-velocity flow conditions, unless the buildings and structures and their foundations are designed to resist the additional flood load.~~

Exception: In Coastal A Zones, stem wall foundations supporting a floor system above and backfilled with soil or gravel to the underside of the floor system shall be permitted provided the foundations are designed to account for wave action, debris impact, erosion and local scour. Where soils are susceptible to erosion and local scour, stem wall foundations shall have deep footings to account for the loss of soil.

Add new text as follows:

R322.3.4 Concrete slabs Concrete slabs used as parking pads, enclosure floors, landings, decks, walkways, patios and similar uses that are located beneath or immediately adjacent to structures shall be designed and constructed in accordance with one of the following:

1. To be structurally independent of the foundation system of the structure, to not transfer flood loads to the main structure, and to be frangible and break away under flood conditions prior to base flood conditions. Reinforcing of concrete slabs, including welded wire reinforcement, shall not be used so as to minimize the potential for concrete slabs being a source of debris. Slabs shall not have turned down edges and slab thickness shall be not more than 4 inches.
2. To be self-supporting, structural slabs capable of remaining intact and functional under base flood conditions, including expected erosion and local scour, and the main structure shall be capable of resisting any added flood loads and effects of local scour due to the presence of the slabs.

Reason: Coastal high hazard areas (Zone V) and Coastal A Zones are portions of flood hazard areas along open shorelines where wave action will occur. Concrete slabs beneath or immediately adjacent to dwellings are affected by flooding, erosion and local scour. The presence of concrete slabs can increase damage to elevated buildings, in part by shifting such that added loads or increased scour occurs on the building foundation. In the 2015 cycle when a similar proposal was submitted, it was noted that specifications for concrete slabs may be appropriate for Zone V. The IRC now treats Coastal A Zones, if delineated or designated, like Zone V.

This proposal helps clarify what is intended by the requirement in R322.3.3 that the area below elevated buildings shall be free of obstructions. It is based on the requirements of referenced standard ASCE 24-14, Flood Resistant Design and Construction, and best practices documented in several publications issued by the Federal Emergency Management Agency (especially Technical Bulletin 5, Free-of-Obstruction Requirements). The proposed text has two alternatives. One requires concrete slabs in coastal high hazard areas and Coastal A Zones to be frangible (means "easily broken") and to break away under flood conditions. The expectation is this will minimize the size of debris and thus minimize the likelihood of causing significant damage to structures. For many years, many local floodplain management ordinances adopted by coastal communities have used the term "frangible."

The limitation on turned-down edges is based on FEMA's post-disaster field experience that identified damage to foundations when slabs intended to breakaway have turned-down edges which inhibit the slabs from cleanly breaking away when undermined by wave scour or erosion. In Zone V and Coastal A Zones concrete slabs are not permitted to be used as structural foundation elements, thus it is not problematic to limit turned-down edges and thickness for nonstructural slabs used for the stated purposes.

The proposal includes an alternative, also based on ASCE 24-14, to have slabs not intended to break away provided the slabs and the adjacent building are designed to resist flood loads.

[note on format – renumber subsequent sections]

Cost Impact: Will not increase the cost of construction
The free of obstruction requirement has been enforced by communities that participate in the National Flood Insurance Program and FEMA guidance has long advised the requirement can be satisfied by requiring concrete slabs to meet the proposed specifications.

RB160-16 : R322.3.3-WILSON12108

Public Hearing Results

Committee Action: **Disapproved**

Committee Reason: The proposed language is unenforceable. In addition, there is no test to determine whether local scour is occurring or not. It is not proper to assume the worst case scenario and require this all across America.

Assembly Motion: **As Submitted**
Online Vote Results: **Failed**
Support: 13.69% (33) Oppose: 86.31% (208)
Assembly Action: **None**

Individual Consideration Agenda

Public Comment 1:

Proponent : Rebecca Quinn, RCQuinn Consulting, Inc., representing Federal Emergency Management Agency (rcquinn@earthlink.net); Glenn Overcash, representing FEMA (glenn.overcash@aecom.com) requests Approve as Modified by this Public Comment.

Modify as Follows:

2015 International Residential Code

R322.3.4 Concrete slabs Concrete slabs used as parking ~~pads, enclosure~~ floors of enclosures, landings, decks, walkways, patios and similar uses that are located beneath or immediately adjacent to structures shall be designed and constructed in accordance with one of the following:

~~1. To be structurally independent of the foundation system of the structure, to not transfer flood loads to the main structure, and to be frangible and break away under flood conditions prior to base flood conditions. Reinforcing of concrete slabs, including welded wire reinforcement, shall not be used so as to minimize the potential for concrete slabs being a source of debris. Slabs shall not have turned down edges and slab thickness shall be not more than 4 inches.~~

1. To be structurally independent of the foundation system of the structure, to not transfer flood loads to the main structure, and to be frangible and break away under flood conditions prior to base flood conditions prior to base flood conditions. Slabs shall be a maximum of 4 inches in thickness, shall not have turned down edges, shall not contain reinforcing, shall have isolation joints at pilings and columns, and shall have control or construction joints in both directions spaced not more than 4 feet apart.
2. To be self-supporting, structural slabs capable of remaining intact and functional under base flood conditions, including ~~expected~~ erosion and local scour, and the main structure shall be capable of resisting any added flood loads and effects of local scour due to the presence of the slabs.

Commenter's Reason: The existing language applies to any and all concrete slabs regardless of location on a site. The original proposal narrows it to slabs beneath buildings and "immediately adjacent" to buildings. Objections to "immediately adjacent" were raised. We considered modifying the proposal to restore the original, applying it to all slabs. While there is no definition of "immediately adjacent," it is preferable to requiring all slabs on a site to meet the requirements.
The existing language for concrete slabs, found at the end of Section R322.3.3, already requires consideration of scour for ALL slabs. During deliberation, opposition was expressed about including scour, and yet that was not changed. Plus, after coastal storm FEMA observes damage associated with slabs that do not take into account scour so it is reasonable to account for scour in areas with erodible soils. This proposal has two options. The first is prescriptive – slabs built as specified will break up

when undermined by scour and erosion thus site-specific consideration of scour is not required. The second retains the requirement to consider erosion and local scour (removing the word "expected"), which is necessary for slabs to actually function as self-supporting slabs.

Public Comment 2:

Proponent : Gregory Wilson, FEMA, representing Federal Emergency Management Agency (gregory.wilson2@fema.dhs.gov) requests Approve as Modified by this Public Comment.

Modify as Follows:

2015 International Residential Code

R322.3.4 Concrete slabs

Concrete slabs used ~~as~~ for parking ~~pads~~, ~~enclosure~~ floors of enclosures, landings, decks, walkways, patios and similar uses that are located beneath structures, or ~~immediately adjacent to structures~~ that are located such that if undermined or displaced during base flood conditions the foundations could sustain structural damage, shall be designed and constructed in accordance ~~with~~ wtih one of the following:

1. ~~To be structurally independent of the foundation system of the structure, to not transfer flood loads to the main structure, and to be frangible and break away under flood conditions prior to base flood conditions. Reinforcing of concrete slabs, including welded wire reinforcement, shall not be used so as to minimize the potential for concrete slabs being a source of debris. Slabs shall not have turned down edges and slab thickness shall be not more than 4 inches.~~
2. ~~To be self-supporting, structural slabs capable of remaining intact and functional under base flood conditions, including expected erosion and local scour, and the main structure shall be capable of resisting any added flood loads and effects of local scour due to the presence of the slabs.~~

1. To be structurally indipendent of the foundation system of the structure, to not transfer flood loads to the main structure, and to be frangible and break away under flood conditions prior to base flood conditions. Slabs shall be a maximum of 4 inches in thickness, shall not have turned-down edges, shall not contain reinforcing, shall have isolation joints at pilings and columns, and shall have control or construction joints in both directions spaced not more than 4 feet apart.
2 To be self-supporting, structural slabs capable of remaining intact and fuctional under base flood conditions, including erosion and local scour, and the main structure shall be capable of resisting any added flood loads and effects of local scour due to the prsence of the slabs.

Commenter's Reason: The existing language applies to any and all concrete slabs regardless of location on a site. The original proposal would have narrowed it to slabs beneath buildings and "immediately adjacent" to buildings. Objections to "immediately adjacent" were raised. We considered modifying the proposal to restore the original, applying it to all slabs. Instead, this public comment replaces it with a performance statement which would require assessment as to whether damage would result if slabs were displaced.
The existing language for concrete slabs, found at the end of Section R322.3.3, already requires consideration of scour for ALL slabs. During deliberation, opposition was expressed about including scour, and yet that was not changed. Plus, after coastal storm FEMA observes damage associated with slabs that do not take into account scour so it is reasonable to account for scour in areas with erodible soils. This proposal has two options. The first is prescriptive – slabs built as specified will break up when undermined by scour and erosion thus site-specific consideration of scour is not required. The second retains the requirement to consider erosion and local scour (removing the word "expected"), which is necessary for slabs to actually function as self-supporting slabs.

Proponent : Scott Campbell, representing Portland Cement Association (scampbell@cement.org) requests Approve as Submitted.

Commenter's Reason: This proposal clarifies the provisions for concrete slabs in coastal areas subjected to flooding. The provisions are in line with current practice in jurisdictions participating in the National Flood Insurance Program, and reflect current state of the art design practice.

RB160-16

RB161-16
IRC: R322.3.6 (New).

Proposed Change as Submitted

Proponent : Gregory Wilson (gregory.wilson2@fema.dhs.gov); Rebecca Quinn, representing Federal Emergency Management Agency (rcquinn@earthlink.net)

2015 International Residential Code

Add new text as follows:

R322.3.6 Stairways and ramps. Stairways and ramps that are located below the lowest floor elevations specified in Section R322.3.2 shall comply with at least one of the following:
1. Be designed and constructed to resist flood loads and minimize transfer of flood loads to the building or structure, including foundation; or
2. Break away during design flood conditions without causing damage to the building or structue, including foundaton; or
3. Be retractable, or able to be raised to or above the lowest floor elevation, provided the ability to be retracted or raised prior to the onset of flooding is not contrary to the means of egress requirements of the code.

Reason: Coastal high hazard areas (Zone V) and Coastal A Zones are portions of flood hazard areas along open shorelines where wave action will occur. Stairways and ramp for dwellings are affected by flooding, erosion and scour and the presence of stairways and ramps can increase damage to elevated buildings. In the 2015 cycle when a similar proposal was submitted, it was noted that specifications for stairways and ramps may be appropriate for Zone V. The IRC now treats Coastal A Zones, if delineated or designated, like Zone V.
This proposal helps clarify what is intended by the requirement in R322.3.3 that the area below elevated buildings shall be free of obstructions. It is based on the requirements of referenced standard ASCE 24-14, Flood Resistant Design and Construction and best practices documented in several publications issued by the Federal Emergency Management Agency (especially Technical Bulletin 5, Free-of-Obstruction Requirements). Post-disaster investigations reveal stairways do break away; if properly detailed, they can break away with no significant damage to the remaining building.

ASCE 24 commentary and FEMA guidance advises satisfying the requirement to resist flood-related loads can be best achieved by using railings and treads that are open to the extent allowed by code to facilitate the passage of floodwater. Massive stairs, especially masonry stairs, do not meet the requirement in R322.3.3 that the area below elevated buildings is free of obstruction (obstructions divert waves onto the foundation or adjacent buildings and can exacerbate scour). Ramps should be positioned to avoid alignment with approaching waves, which would allow floodwater to surge up the ramps perhaps even higher than the peak flood elevation, thus flowing into buildings.

Stairways and ramps must be designed to carry normal loads required by the IRC, which must be considered when evaluating the alternative to provide stairways and ramps that are designed to breakaway under flood loads.

Cost Impact: Will not increase the cost of construction
The requirement to avoid obstructions and to have elements below elevated buildings breakaway has been enforced by communities that participate in the NFIP, whether by enforcement of the IRC or local floodplain management regulations. FEMA guidance has long advised the requirement can be satisfied by requiring stairways and ramps to meet the proposed specifications.

RB161-16 :
R322.3.6 (NEW)-
WILSON12116

Public Hearing Results

Committee Action: **Approved as Modified**

Modification:

R322.3.6 Stairways and ramps. Stairways and ramps that are located below the lowest floor elevations specified in Section R322.3.2 shall comply with at least one of the following:
1. Be designed and constructed with open or partially open risers and railings to allow the free passage of floodwater and waves under the builidng and structure andto resist flood loads and minimize transfer of flood loads to the building or structure, including foundation; or
2. Break away during design flood conditions without causing damage to the building or structue, including foundaton; or
3. Be retractable, or able to be raised to or above the lowest floor elevation, provided the ability to be retracted or raised prior to the onset of flooding is not contrary to the means of egress requirements of the code.

Committee Reason: In the modification, Section R322.3.6 Item 1 went from language that is wide open and vague to something that is concrete, which is very helpful in the code. The proposal adds needed clarity.

Assembly Action: **None**

Individual Consideration Agenda

Public Comment 1:

Proponent : Gary Ehrlich, National Association of Home Builders, representing National Association of Home Builders (gehrlich@nahb.org) requests Approve as Modified by this Public Comment.

Further Modify as Follows:

2015 International Residential Code

R322.3.6 Stairways and ramps. Stairways and ramps that are located below the lowest floor elevations specified in Section R322.3.2 shall comply with at least one of the following:
1. Be designed and constructed with open or partially open risers and ~~railings to allow the free passage of floodwater and waves under the building and structure and to resist flood loads and minimize transfer of flood loads to the building or structure, including foundation~~ guards; or
2. ~~Break~~ Stairways and ramps not part of a required means of egress shall be designed and constructed to break away during design flood conditions without causing damage to the building or ~~structue~~ structure, including ~~foundaton~~ foundation; or
3. Be retractable, or able to be raised to or above the lowest floor elevation, provided the ability to be retracted or raised prior to the onset of flooding is not contrary to the means of egress requirements of the code; or
4. Be designed and constructed to resist flood loads and minimize transfer of flood loads to the building or structure, including foundation.

Areas below stairways and ramps shall not be enclosed with walls below the design flood elevation, unless such walls are constructed in accordance with Section R322.3.4.

Commenter's Reason: The purpose of this public comment is to revise and expand the guidance on stairways and ramps added by this proposal. The original proposal brings over language from ASCE 24-14 into the IRC. However, the ASCE 24 provisions contains two significant flaws. First, the ASCE 24 provisions are written in performance language, whereas the IRC is intended as a prescriptive code. Second, the provisions fall short in bringing forward all of the guidance and recommendations on stairways and ramps available in FEMA TB-5.
NAHB agrees with the concept of constructing stairs with open (or partially open) treads and open guards, as recommended in FEMA TB-5, as one option for dealing with access to and egress from a building in Zone V. While doing so may result in additional costs if the stair needs to be extended to meet the 4" tread height limit, nonetheless open treads and guards are probably the most cost-effective solution for stairs and ramps. The proposal as modified by the committee is amended to separate the prescriptive specification from performance language, introduce the performance language as its own Option #4, and remove commentary language. Code terminology is also corrected ("guards" instead of "railings").

NAHB members building in coastal regions (including Zone V) have expressed concern about ASCE 24 and the IRC and endorsing the construction of a breakaway stair that also acts as the means of egress from the dwelling. Such a stair could potentially fail in a non-flood event, or even in a flood event before occupants have evacuated, presenting a significant life safety issue. FEMA TB-5 hints that breakaway stairs should not be constructed where such stairs would be part of a means of egress. Language similar to that used in R311 (see Sections R311.7.10.2 and R311.7.12 is adapted to modify Option #2 to clarify the point.

Significant damage has occurred to stairs where solid walls extended from the bottom of stair/stringer down to grade. Technically, this would be considered a violation of the "free-of-obstruction" rule under the NFIP, as such construction would not allow the free passage of floodwater and waves under the building and stair. Such enclosures under stairs and ramps are generally discouraged and negatively affect flood insurance rates, but if desired the requirements in IRC Section R322.3.4 for open lattice or breakaway walls must be followed for such construction. A provision is added to clarify this requirement, and would apply regardless of which option or options are selected from the numbered list above.

Proponent : Scott Campbell, representing Portland Cement Association (scampbell@cement.org) requests Approve as Submitted.

Commenter's Reason: The proposed change as modified requires stairs to be both open and designed to resist flood loads. This prevents the use of properly designed mass stairs and ramps.

RB162-16
IRC: R322.3.6 (New).

Proposed Change as Submitted

Proponent : Gregory Wilson (gregory.wilson2@fema.dhs.gov); Rebecca Quinn, representing Federal Emergency Management Agency (rcquinn@earthlink.net)

2015 International Residential Code

Add new text as follows:

R322.3.6 Decks and porches. Attached decks and porches shall meet the elevation requirements of Section R322.3.2 and shall either meet the foundation requirements of this section or shall be cantilevered from or knee braced to the building or structure. Self-supporting decks and porches that are below the elevation required in Section R322.3.2 shall not be enclosed by solid, rigid walls, including walls designed to break away. Self-supporting decks and porches shall be designed and constructed to remain in place during base flood conditions or shall be frangible and break away under base flood conditions.

Reason: Coastal high hazard areas (Zone V) and Coastal A Zones are portions of flood hazard areas along open shorelines where wave action will occur. Decks and porches attached to or adjacent to dwellings are affected by flooding, erosion and scour. The presence of decks and porches can increase damage to elevated buildings unless they are constructed in ways intended to minimize damage. In the 2015 cycle when a similar proposal was submitted, it was noted that specifications for decks and porches may be appropriate for Zone V. The IRC now treats Coastal A Zones, if delineated or designated, like Zone V.

This proposal clarifies how decks and porches are treated and is based on the requirements of referenced standard ASCE 24-14, Flood Resistant Design and Construction and best practices documented in several publications issued by the Federal Emergency Management Agency (especially Technical Bulletin 5, Free-of-Obstruction Requirements). Attached decks must be at or above the same elevation as dwellings because they are, in effect, extensions of the dwellings. Also, if attached and lower than the elevation of a dwelling, a deck or porch would be an obstruction and thus not permitted by the free-of-obstruction requirement in R322.3.3.

Self-supporting decks and porches are separate structures. If permitted below the elevation required for dwellings, they must not be enclosed by walls because decks enclosed with walls are buildings that must meet all requirements for buildings in flood hazard areas. Whether self-supporting decks and porches are elevated or below the require elevation, they must either be designed to resist flood loads or to break away under flood and wave conditions associated with the base flood. The term frangible means "easily broken," the expectation is this will minimize the size of debris and thus minimize the likelihood of causing significant damage to structures by the presence of water-borne debris. For many years, many local floodplain management ordinances adopted by coastal communities have used the term "frangible."

Cost Impact: Will not increase the cost of construction

The elevation requirement and free of obstruction requirement have been enforced by communities that participate in the National Flood Insurance Program and FEMA guidance has long advised the requirement can be satisfied by requiring decks and porches to meet the proposed specifications.

RB162-16 :
R322.3.6 (NEW)-
WILSON12118

Public Hearing Results

Committee Action: **Approved as Submitted**

Committee Reason: This proposal gives better guidance regarding decks and porches.

Assembly Action: **None**

Individual Consideration Agenda

Public Comment 1:

Proponent : Charles Bajnai, representing Deck Code Coalition and Chesterfield County, VA; and North American Deck and Railing Association (NADRA) (bajnaic@chesterfield.gov) requests Approve as Modified by this Public Comment.

Modify as Follows:

2015 International Residential Code

R322.3.6 Decks and porches. Attached decks and porches shall meet the elevation requirements of Section R322.3.2 and shall either meet the foundation requirements of this section or shall be cantilevered from or knee braced to the building or structure. ~~Self-supporting~~ Freestanding decks and porches that are below the elevation required in Section R322.3.2 shall not be enclosed by solid, rigid walls, including walls designed to break away. ~~Self-supporting~~ Freestanding decks and porches shall be designed and constructed to remain in place during base flood conditions or shall be frangible and break away under base flood conditions.

Commenter's Reason: The Deck Code Coalition is submitting this public comment to be consistent with the terminology used in the deck section, R507.

RB162-16

RB167-16
IRC: R325.3.

Proposed Change as Submitted

Proponent : Maureen Traxler, representing City of Seattle Dept of Construction & Inspections (maureen.traxler@seattle.gov)

2015 International Residential Code

Revise as follows:

R325.3 Area limitation. The aggregate area of a mezzanine or mezzanines shall be not greater than one-third of the floor area of the room or space in which they are located. The enclosed portion of a room shall not be included in a determination of the floor area of the room in which the *mezzanine* is located.
Exception: The aggregate area of a mezzanine located within a dwelling unit equipped with a fire sprinkler system in accordance with Section P2904 shall not be greater than one-half of the floor area of the room, provided:
1. Except for enclosed closets and bathrooms, the mezzanine shall be open to the room in which such mezzanine is located;
2. The opening to the room shall be unobstructed except for walls not more than 42 inches (1067 mm) in height, columns and posts, and
3. The exceptions to Section R325.5 are not applied.

Reason: This exception was added to the IBC in Group A by proposal G 138-15. (As of the code change submittal date, the proposal was subject to online governmental consensus vote.) The rationale for that proposal was to provide design flexibility without impacting safety. The exception trades the ability to enclose the mezzanine for a slight increase in floor area. The openness of the mezzanine gives occupants increased awareness of hazardous conditions developing in the dwelling unit. This rationale applies equally to IRC buildings.

Cost Impact: Will not increase the cost of construction
This proposal has potential to reduce the cost of construction by allowing larger mezzanines in dwellings.

RB167-16 :
R325.3-
TRAXLER12275

Public Hearing Results

Committee Action: **Approved as Submitted**

Committee Reason: This proposal adds design flexibility.

Assembly Action: **None**

Individual Consideration Agenda

Public Comment 1:

Proponent : Stephen Thomas, Colorado Code Consulting, LLC, representing Colorado Chapter ICC (sthomas@coloradocode.net) requests Approve as Modified by this Public Comment.

Further Modify as Follows:

2015 International Residential Code

R325.3 Area limitation. The aggregate area of a mezzanine or mezzanines shall be not greater than one-third of the floor area of the room or space in which they are located. The enclosed portion of a room shall not be included in a determination of the floor area of the room in which the *mezzanine* is located.
Exception: The aggregate area of a mezzanine located within a dwelling unit equipped with a fire sprinkler system in accordance with Section P2904 shall not be greater than one-half of the floor area of the room, provided:
1. Except for enclosed closets and bathrooms, the mezzanine shall be open to the room in which such mezzanine is located;
2. The opening to the room shall be unobstructed except for walls not more than ~~42~~ 36 inches (1067 mm) in height, columns and posts, and
3. The exceptions to Section R325.5 are not applied.

Commenter's Reason: This public comment is editorial in nature. Item 2 of the exception limits walls to not more than 42 inches. The current code language per the erratta is 36 inches. We believe that the original propopent intended to bring the same language into this change. This would be consistent with what was in the 2012 edition.

RB168-16

IRC: , R202 (New), R327 (New), R327.1 (New).

Proposed Change as Submitted

Proponent : Richard Davidson, representing Self

2015 International Residential Code

Add new definition as follows:

SECTION R202 DEFINITIONS

Loft. A room or space directly under the roof of a small house that is open to the floor below and is used for accomodations or storage.

SECTION R202 DEFINITIONS

Small house. A building containing one dwelling unit and having a floor area, excluding lofts, of not more than 500 square feet.

Add new text as follows:

SECTION R327 SMALL HOUSES

R327.1 General. Small houses shall comply with the requirements of this code except as follows:

1. Access to basements, underfloor spaces, and lofts shall be by means of alternating tread devices, ladders or any means that complies with Section R311.
2. The minimum floor areas of Section R304 shall not apply.
3. The minimum ceiling height requirements of Section R305 shall not apply.
4. Lofts used as sleeping areas shall not be required to comply with Section R310 provided that the loft opens to a floor containing an emergency escape and rescue opening.
5. Basements and underfloor areas shall not be required to comply with Section R310 provided that the basement or underfloor area does not contain sleeping rooms.
6. The minimum door sizes of Section R311.2 shall not apply.
7. The hallway width requirements of Section R311.6 shall not apply.
8. The guard Requirements of Section R312 shall not apply to lofts.
9. The automatic fire sprinkler requirements of Section R313 shall not apply.

Reason: From Wikipedia:

In the United States the average size of new single family homes grew from 1,780 square feet in 1978 to 2,479 square feet in 2007 and to 2,662 square feet in 2013, despite a decrease in the size of the average family. Reasons for this include increased material wealth and prestige.

The small house movement is a return to houses of less than 1,000 square feet. Frequently the distinction is made between small (between 400 square feet and 1,000 square feet), and tiny houses (less than 400 square feet, with some as small as 80 square feet. Sarah Susanka has been credited with starting the recent countermovement toward smaller houses when she published The Not So Big House (1997). Earlier pioneers include Lloyd Kahn, author of Shelter (1973). Henry David Thoreau, and the publication of his book "Walden" is also quoted as early inspiration.

Tiny houses on wheels were popularized by Jay Shafer who designed and lived in a 96 sq ft house and later went on to offer the first plans for tiny houses on wheels, initially founding Tumbleweed Tiny House Company, and then Four Lights Tiny House Company (September 6, 2012).

In 2005, after Hurricane Katrina, Marianne Cusato developed Katrina Cottages that start at 308 square feet as an alternative to FEMA trailers. Though these were created to provide a pleasant solution to a disaster zone, Cusato received wider interest in her design from developers of resorts, for example.

With the financial crisis of 2007–08, the small house movement attracted more attention as it offers housing that is more affordable and ecologically friendly. Overall, however, it represents a very small part of real estate transactions. Thus only 1% of home buyers acquire houses of 1,000 square feet or less. Small houses are also used as accessory dwelling units (or ADUs), to serve as additional on-property housing for aging relatives or returning children, as a home office, or as a guest house. Typical costs are about $20,000 to $50,000 as of 2012.

In Oakland, California, Gregory Kloehn builds small houses out of found materials, for an estimated cost of $40.
Small and tiny houses have received increasing media coverage including a television show, Tiny House Nation, in 2014 and Tiny House Hunters. The possibility of building one's own home has fueled the movement, particularly for tiny houses on wheels. However, tiny houses are built to last as long as traditional homes. They use traditional building techniques and materials and they are aesthetically similar to larger homes.

This increase in popularity of tiny houses, and particularly the rapid increase in the number of both amateur and professional builders, has led to concerns regarding safety among tiny house professionals. In 2013, an Alliance of tiny house builders was formed to promote ethical business practices and offer guidelines for construction of tiny houses on wheels. This effort was carried on in 2015 by the American Tiny House Association. In 2015, the nonprofit American Tiny House Association was formed to promote the tiny house as a viable, formally acceptable dwelling option and to work with local government agencies to discuss zoning and coding regulations that can reduce the obstacles to tiny living.

One of the biggest obstacles to growth of the tiny house movement is the difficulty in finding a place to live in one. Zoning regulations typically specify minimum square footage for new construction on a foundation, and for tiny houses on wheels, parking on one's own land may be prohibited by local regulations against "camping." In addition, RV parks do not always welcome tiny houses. DIYers may be turned away, as many RV parks require RVs be manufactured by a member of the Recreational Vehicle Industry Association "(RVIA)".

Tiny houses on wheels are considered RVs and not suitable for permanent residence, according to the RVIA. From RVBusiness, "The RVIA will continue to shy away from allowing members who produce products that are referred to as 'tiny houses' or 'tiny homes. (However, the RVIA does allow "tiny home" builders to join as long as their units are built to park model RV standards.)"

In 2014, the first "tiny house friendly town" was declared in Spur, Texas, however it was later clarified that a tiny house may not be on wheels but must be secured to a foundation.

The IRC needs to catch up with the latest and hottest trend in residential construction, small houses. Smaller homes are less expensive than larger ones in terms of taxes and building, heating, maintenance, and repair costs. The typical size of a small home seldom exceeds 500 square feet. Small houses emphasize design over size, utilize dual purpose features and multi-functional furniture, and incorporate technological advances of space saving equipment and appliances. Vertical space optimization is also a common feature of small houses and apartments.

While people interested in building a small home may face opposition from local zoning ordinances and neighborhood groups, that opposition should not be used as a reason to ignore the need for regulating the construction of these structures where they are permitted. Whether small houses are permitted or not should be left to local jurisdictions and should not be part of the discussion for construction code debate.

It can be argued that small houses can be built with current building regulations and that is partly true. However, it can also be argued that the size of a structure makes certain requirements more or less important and the smaller size of small houses makes occupants more familiar with their surroundings giving credence to reducing the need for certain requirements.

This proposal limits the size of a small house to 500 square feet. It permits a loft with access by as little as a ladder to save space and does not require a guard similar to an oversized bunk bed. Because these homes are often occupied by one or two people and furniture often consists of built-ins, floor areas, hallway widths, and ceiling heights are less important. And, since these are often built as a single room with a loft and separate bathroom, lofts opening into the main room should not be required to have an emergency escape and rescue opening if the room it opens to contains such an opening. Because of the small size of basements or under floor spaces, they are less likely to be used in the same way that traditional basements may be used and should not be required to have emergency escape and rescue openings unless the space is used for a sleeping room(s).

While small houses may typically be thought of as a primary residence, they may also be used as a lake cabin, hunting cabin, or other recreational use that should be regulated but are often exempted from permitting because of the problems of applying current rules to these small structures.

There have been no reports that small houses are unsafe in any way. It is time that the IRC catches up with this new building design.

Cost Impact: Will not increase the cost of construction
This proposal will not increase the cost of construction as it will provide direction and relief from current codes for small houses.

RB168-16 : R327 (NEW)-DAVIDSON10897

Public Hearing Results

Committee Action: **Disapproved**

Committee Reason: The issue of small houses and apartments is important. However, there are problems that must be addressed, such as safety issues related to basements and attics. The proposal should not be approved as written. There needs to be a more comprehensive approach. The proposal seems to simply point out how small houses do not meet the code, which may not be appropriate. It is also important to realize that the current code's provisions, including, but not limited to, those for manufactured houses, do not disallow many types of small houses. A small house with a loft or mezzanine, for example, is possible in the IRC right now. The concept of smaller houses may be more suited for an appendix. Small houses are a growing concern, the demand for them is increasing, the IRC needs to address them in some fashion, and the committee encourages the proponent to further develop the proposal.

Assembly Action: **None**

Individual Consideration Agenda

Public Comment 1:

Proponent : Andrew Morrison, representing Tiny House Enterprises, LLC (Andrew@TinyHouseBuild.com); Martin Hammer, representing Martin Hammer, architect (mfhammer@pacbell.net); Macy Miller, representing self (Mizacy@gmail.com); Chris Keefe, representing OrganicForms Design (chris@organicformsdesign.com); Brandon Marshall, representing FOG Studio (brandon@fogprojects.com); Gabriella Morrison, representing Tiny House Enterprises, LLC (Gabriella@TinyHouseBuild.com); James Herndon, representing self (jamesmherndon@gmail.com); Tiffany Redding, representing FOG Studio (tiffany@fogprojects.com); Nabil Taha, representing Precision Structural Engineering, Inc. (bill@structure1.com) requests Approve as Modified by this Public Comment.

Replace Proposal as Follows:

2015 International Residential Code

APPENDIX V TINY HOUSES

CHAPTER PART AV101— GENERAL

AV101.1 Scope. This appendix shall be applicable to tiny houses used as single dwelling units. Tiny houses shall comply with this code except as otherwise stated in this appendix.

CHAPTER PART AV102— DEFINITIONS

AV102.1 General. The following words and terms shall, for the purposes of this appendix, have the meanings shown herein. Refer to Chapter 2 of this code for general definitions.

EGRESS ROOF ACCESS WINDOW. A skylight or roof window designed and installed to satisfy the emergency escape and rescue opening requirements in Section R310.2.

LANDING PLATFORM. A landing provided as the top step of a stairway accessing a loft.

LOFT. A floor level located more than 30 inches (762 mm) above the main floor and open to it on at least one side with a ceiling height of less than 6 feet 8 inches (2032 mm), used as a living or sleeping space.

TINY HOUSE. A dwelling that is 400 square feet (37 m^2) or less in floor area excluding lofts.

CHAPTER PART AV103— CEILING HEIGHT

AV103.1 Minimum ceiling height. Habitable space and hallways in tiny houses shall have a ceiling height of not less than 6 feet 8 inches (2032 mm). Bathrooms, toilet rooms, and kitchens shall have a ceiling height of not less than 6 feet 4 inches (1930 mm). Obstructions shall not extend below these minimum ceiling heights including beams, girders, ducts, lighting and other obstructions.

Exception: Ceiling heights in lofts are permitted to be less than 6 feet 8 inches (2032 mm).

CHAPTER PART AV104— LOFTS

AV104.1 Minimum loft area and dimensions. Lofts used as a sleeping or living space shall meet the minimum area and dimension requirements of Sections AV104.1.1 through AV104.1.3.

AV104.1.1 Minimum area. Lofts shall have a floor area of not less than 35 square feet (3.25 m^2).

AV104.1.2 Minimum dimensions. Lofts shall be not less than 5 feet (1524 mm) in any horizontal dimension.

AV104.1.3 Height effect on loft area. Portions of a loft with a sloping ceiling measuring less than 3 feet (914 mm) from the finished floor to the finished ceiling shall not be considered as contributing to the minimum required area for the loft.

Exception: Under gable roofs with a minimum slope of 6:12, portions of a loft with a sloping ceiling measuring less than 16 inches (406 mm) from the finished floor to the finished ceiling shall not be considered as contributing to the minimum required area for the loft.

AV104.2 Loft access. The access to and primary egress from lofts shall be any type described in Sections AV104.2.1 through AV104.2.4.

AV104.2.1 Stairways. Stairways accessing lofts shall comply with this code or with Sections AV104.2.1.1 through AV104.2.1.5.

AV104.2.1.1 Width. Stairways accessing a loft shall not be less than 17 inches (432 mm) in clear width at or above the handrail. The minimum width below the handrail shall be not less than 20 inches (508 mm).

AV104.2.1.2 Headroom. The headroom in stairways accessing a loft shall be not less than 6 feet 2 inches (1880 mm), as measured vertically, from a sloped line connecting the tread or landing platform nosings in the middle of their width.

AV104.2.1.3 Treads and risers. Risers for stairs accessing a loft shall be not less than 7 inches (178 mm) and not more than 12 inches (305 mm) in height. Tread depth and riser height shall be calculated in accordance with one of the following formulas:
1. The tread depth shall be 20 inches (508 mm) minus 4/3 of the riser height, or

2. The riser height shall be 15 inches (381 mm) minus 3/4 of the tread depth.

AV104.2.1.4 Landing platforms. The top tread and riser of stairways accessing lofts shall be constructed as a landing platform where the loft ceiling height is less than 6 feet 2 inches (1880 mm) where the stairway meets the loft. The landing platform shall be 18 inches to 22 inches (457 to 559 mm) in depth measured from the nosing of the landing platform to the edge of the loft, and 16 to 18 inches (406 to 457 mm) in height measured from the landing platform to the loft floor.

AV104.2.1.5 Handrails. Handrails shall comply with Section R311.7.8.

AV104.2.1.6 Stairway guards. Guards at open sides of stairways shall comply with Section R312.1.

AV104.2.2 Ladders. Ladders accessing lofts shall comply with Sections AV104.2.1 and AV104.2.2.

AV104.2.2.1 Size and capacity. Ladders accessing lofts shall have a rung width of not less than 12 inches (305 mm) and 10 inches (254 mm) to 14 inches (356 mm) spacing between rungs. Ladders shall be capable of supporting a 200 pound (75 kg) load on any rung. Rung spacing shall be uniform within 3/8-inch (9.5 mm).

AV104.2.2.2 Incline. Ladders shall be installed at 70 to 80 degrees from horizontal.

AV104.2.3 Alternating tread devices. Alternating tread devices accessing lofts shall comply with Sections R311.7.11.1 and R311.7.11.2. The clear width at and below the handrails shall be not less than 20 inches (508 mm).

AV104.2.4 Ships ladders. Ships ladders accessing lofts shall comply with Sections R311.7.12.1 and R311.7.12.2. The clear width at and below handrails shall be not less than 20 inches (508 mm).

AV104.2.5 Loft Guards. Loft guards shall be located along the open side of lofts. Loft guards shall not be less than 36 inches (914 mm) in height or one-half of the clear height to the ceiling, whichever is less.

CHAPTER PART AV105— EMERGENCY ESCAPE AND RESCUE OPENINGS

AV105.1 General. Tiny houses shall meet the requirements of Section R310 for emergency escape and rescue openings.

> **Exception:** Egress roof access windows in lofts used as sleeping rooms shall be deemed to meet thre requirements of Section R310 where installed such that the bottom of the opening is not more than 44 inches (1118 mm) above the loft floor, provided the egress roof access window complies with the minimum opening area requirements of Section R310.2.1.

Commenter's Reason: During the Committee Action Hearings in Kentucky, IRC Committee members explained their disapproval of RB168-16, but also their support for addressing the issue of small houses. In the published reasons the Committee stated "The issue of small houses and apartments is important," and that "The IRC needs to address them in some fashion." They encouraged further development of the proposal, stating "There needs to be a more comprehensive approach", and that "The concept of smaller houses may be more suited for an appendix."

This Public Comment follows the Committee's advice by replacing the original piecemeal proposal with a proposed appendix that takes a "more comprehensive approach". It also reduces the 500 square foot threshold for "small houses" in the original proposal to the widely accepted threshold of 400 square feet for "tiny houses". At that smaller size there is increased difficulty in meeting certain dimensional requirements of the IRC; however, through years of practice by tiny house advocates and years of extensive use of comparably sized "recreational park vehicles" governed by ANSI A119.5, safe alternative dimensions and other requirements have been established that are included in the proposed appendix.

In the published reasons the Committee finally noted that "Small houses are a growing concern, [and] the demand for them is increasing." The reasons for that growing demand are both environmental and financial in nature. Below are statistics illustrating problematic housing trends, the environmental impacts of construction, the cost of home ownership, and how tiny houses can be a part of the solution. That is followed by specific reasons for the code language in the proposed appendix.

- The average home size in the U.S. increased 61% since 1973 to over 2600 square feet. In that time period the average household size decreased, leading to a 91% increase in home square footage per inhabitant (1000 SF per person) (source: US Census Bureau).
- The average house in the U.S. uses approximately 17,300 board feet of lumber and 16,000 square feet of other wood products. A 200 square foot tiny house uses only 1,400 board feet of lumber and 1,275 square feet of additional wood products. The lifetime conditioning costs can be as low as 7% of a conventionally sized home.
- United States Green Building Council (USGBC), the California Energy Commission (CEC), and other entities are working hard to increase energy efficiency in the construction industry. This is a great start, however a reduction in home size is the easiest way to lower energy consumption.
- National home ownership fell to 63.7% in 2015, the lowest level in two decades. Increased housing cost is cited as the main reason for low ownership rate. (source: Joint Center for Housing Studies (JCHS) at Harvard University)
- The average home in the United States costs approximately $358,000 to build, an increase of roughly $200,000 since 1998, whereas the average annual income in the United States has remained unchanged for the last several years, lingering near $52,000. (source: US Census Bureau)
- The average American spends roughly 27% of their annual income on housing (nearly 11 hours of every 40-hour work week). 48% of households making less than $30,000 annually pay more than half of their income on housing, leaving these households less than $15,000 a year to purchase food, health care, education, clothing, and anything else. (source: JCHS)
- The cost of new construction for a 200 square foot tiny house can be as low as $35,000. A typical down payment on an average-sized house is $72,000, more than twice the full cost of a tiny house.
- Cities benefit from tiny house ordinances. With significant need for affordable housing, cities are hard-pressed to find solutions that quickly expand their low-income housing stock without burdening an already burdened system. Tiny houses can be quickly installed in municipalities and set up at little or no cost to the cities.
- Although not addressed in the proposed code language of this public comment, it is important to recognize the need for codes pertaining specifically to movable tiny houses. For some people, homeownership is heavily impacted by the cost of land and even the construction of a fixed tiny house becomes unattainable. For those individuals, the presence of movable tiny houses in the building code may create their only path to home ownership. The flexibility of a movable tiny house allows individuals to locate their homes in areas of community living or on ancillary home sites, without the burdensome cost of a single-family lot. It also allows them to take their home with them should they need to relocate, thus eliminating many typical costs of moving.

Tiny houses can play an important role in minimizing the environmental impacts of housing while providing safe and healthy homes at affordable prices. Pride of ownership improves neighborhoods and community morale. Tiny houses enable more people to become homeowners and contribute to their communities.

REASONS FOR DEFINITIONS:

EGRESS ROOF ACCESS WINDOW. Most manufacturers use this term for their skylights and roof windows that are designed to satisfy the dimensional requirements of emergency escape and rescue openings in U.S. building codes.

LANDING PLATFORM: Landing platforms have been demonstrated in practice to allow for the safe transition between stairways and lofts. (See photos)

LOFT. This definition is a modified version of the definition of loft area in Section 1-3 of ANSI A119.5 Recreational Park Trailer Standard.

TINY HOUSE. This definition is based on the widely accepted maximum square footage for tiny houses in the construction

industry.

REASONS PER SECTION:

AV103. CEILING HEIGHT: The minimum ceiling height for non-loft habitable spaces in this proposed appendix is 6 feet 8 inches. Though lower than the 7 foot minimum for habitable spaces in the IRC, it is higher than the minimum of 6 feet 6 inches in Section 5-3.5.4 of ANSI A119.5 Recreational Park Trailer Standard, that has proven to provide safe and adequate head room during the extended occupancy of recreational park trailers.

AV104 LOFT: Tiny houses have considerably smaller footprints and building height than conventional houses. As such, lofts are essential to maximize the use of space in tiny houses and make them viable shelter for many individuals and families.

It is common knowledge to many building inspectors that spaces labeled "non-habitable storage" in dwellings of all sizes are sometimes used for sleeping or other habitable purposes once the final inspection is complete. Rather than being unable to enforce a falsely stated use, building departments could regulate the health and safety of those spaces for their intended use with the proposed appendix, ensuring health and safety with minimum loft dimensions, requirements for access and egress, and proper emergency escape and rescue openings.

MINIMUM AREA and **MINIMUM DIMENSIONS**: Lofts in tiny houses are small by necessity; however, minimum dimensions are required for lofts used as a living or sleeping space, so as to not impose a risk to occupant health and safety.

HEIGHT EFFECT ON LOFT AREA: For most roof designs in tiny houses, a minimum ceiling height of 3 feet has proven adequate in sleeping lofts for consideration of their required floor area. For gable roofs with moderate to high slopes, the slope has an aggressive impact on the loss of ceiling height but makes up for it with higher areas under the ridge. Thus lofts under gable roofs with a minimum 6:12 slope have a lesser minimum ceiling height when calculating their required floor area.

STAIRWAY WIDTH: These dimensional requirements are identical to those in Section 5-10.4.1.1 of ASNI A119.5. This provision is considered and proven safe for extended occupancy of recreational park trailers.

STAIRWAY HEADROOM: Because tiny houses are limited in square footage and height, IRC compliant head heights for stairs serving lofts are often not achievable. Therefore the stair headroom requirement has been reasonably reduced to 6 feet 2 inches.

STAIRWAY TREAD/RISER: This is identical to the requirements for treads/risers in Section 5-10.4.1.1 of ANSI A119.5. This provision is considered and proven safe for extended occupancy of recreational park trailers.

LANDING PLATFORMS: Landing platforms have been demonstrated in practice to allow for the safe transition between stairways and lofts. The required range of dimensions allow for a simple transition between standing and kneeling when entering or exiting the loft. (See photos)

LADDERS: This is identical to the requirements for ladders in Section 5-10.5 of ANSI A119.5. This provision is considered and proven safe for extended occupancy of recreational park trailers.

ALTERNATING TREAD DEVICES: Alternating tread devices as described in the IRC, are allowed to provide access to and egress from lofts.

SHIPS LADDERS: Ships ladders as described in the IRC, are allowed to provide access to and egress from lofts.

LOFT GUARDS: The height requirement for loft guards is identical to that for guardrails in Section 5-10.7 of ANSI A119.5.

AV105 EMERGENCY ESCAPE AND RESCUE: Due to the considerably smaller footprints of tiny houses, ceiling heights in sleeping lofts therein are often necessarily lower than minimum ceiling heights required by the IRC for sleeping rooms in larger houses. Egress roof access windows (which are specifically designed to meet the dimensional requirements of emergency escape and rescue openings) can be installed with their openings within 44 inches of the loft floor, thus meeting the requirements of Section R310 when wall mounted windows meeting these requirements are not possible.

Bibliography: ANSI A119.5 Recreational Park Trailer Standard 2009 Edition

RB168-16

RB169-16
IRC: R327 (New), R327.1 (New).

Proposed Change as Submitted

Proponent : Marcelo Hirschler, representing GBH International (gbhint@aol.com)

2015 International Residential Code

Add new text as follows:

SECTION R327 Installation of stationary generators not required by code

R327.1 General The installation of stationary generators not required by code shall comply with the applicable requirements of the International Fire Code and NFPA 37.

Reference standards type: This is an update to reference standard(s) already in the ICC Code Books
Add new standard(s) as follows:
NFPA 37, Standard for the Installation and Use of Stationary Combustion Engines and Gas Turbines (2015) - Already referenced in IMC and IFGC.

Reason:
The IRC has no information about the installation of generators not required by code outside of residences and they can be a serious fire hazard. Generators are often installed to provide power to residences and they are usually installed very close to the residence, a potential fire problem. A parallel proposal has been made to the IFC to address this issue.

The IFC also lacks the information an authority having jurisdiction needs to either provide for the location of generators not required by code or to assess the validity of any reports provided by a generator manufacturer seeking to place engines close to combustible walls. The IMC and the IFGC contain references to NFPA 37 (section 915. of the IMC and section 616 of the IFGC) but the IFC does not. NFPA 37 requires that generators installed outdoors not be placed closer than 5 ft from combustible walls. It does not, however, provide good guidance on exceptions, which are essential because most generators placed outdoors tend to be placed much closer than 5 ft from the walls. In particular, there are no criteria for how to demonstrate that an engine fire will not ignite a combustible wall or for how close to the wall the engine can be placed. The language proposed to the IFC (and which this would link to if both are approved) provides that information without being a detailed test protocol and without ruling out the use of alternative means and methods as a tool.
1. In view of the close proximity between buildings which could install engines or generators to ensure uninterrupted electrical supply, clear criteria for engine placement are essential to permit adequate enforcement. Neither the IFC nor the IRC contain enforceable criteria.
2. The proposal to the IFC ensures that it does not specify details of the full scale fire test procedure to be used for determining acceptable separation distances. This is
reflected in the proposed wording.
3. This proposal to the IFC does not include wording that would require specific test protocols but simply proposes wording that ensures a minimal level of safety, after full scale fire tests have been conducted.
4. Research conducted by the proponent has demonstrated that, if a generator burns it can cause the ignition of nearby combustible walls. Whether ignition of combustible walls occurs will depend primarily on three factors: (a) the amount and fire performance of the combustible materials in the generator and the engineering design of the generator and its enclosure, (b) the materials contained in the combustible walls present and (c) the distance between the generator and the combustible walls.
5. Fire tests have demonstrated that fire tests with some generators can be more severe when the generator is not operating because the associated cooling fan in the generator can result in the extinguishment of the fire when the generator is operating but not when the generator is idle. This has been shown for at least two
generator designs. (a) Jason Huczek (Southwest Research Institute) ["Custom Fire Testing of Power Generators for NFPA 37 Compliance", at the NFPA 2010 Annual Meeting, Session T68, June 9, 2010] and (b) Marcelo Hirschler ["Testing of Residential Electrical Generators", Fire and Materials Conf., San Francisco, CA, Jan. 31-Feb. 2, 2011, pp. 71-81, Interscience Communications, London, UK]. Both publications are attached for information to the committee: one deals with full scale tests (like the ones recommended in this proposal) and one deals with small scale tests. The results demonstrate that it is important that full scale tests be conducted.
6. There can be no assurance that every generator will be provided with an adequate fan. Therefore, full scale fire tests or calculations should ideally be conducted with both the generator operating and the generator idle. However, that requirement is not included here, to allow maximum flexibility for the fire test.
7. The full scale fire tests or calculations leading to the determination of the safe location distance need to be conducted in such a way that there is complete consumption of the combustible materials in the generator to ensure that the full scale fire tests actually address the fire hazard.
8. If the full scale fire tests or calculations do not result in complete consumption of the combustible materials in the generator there can be no assurance that the results are fully representative of the actual fire hazard.
9. There are different types of combustible wall materials that are in common use and the full scale fire tests need to be

conducted using either the wall materials to be used in the actual installation or the combustible wall materials with the poorest fire performance. Fire tests have demonstrated that polypropylene siding is a more combustible wall material than either wood siding or vinyl (PVC) siding. Peak heat release rate data for polypropylene, wood and PVC
siding materials are shown below.
10. The distance between the generator and the combustible walls should provide be a reasonable margin of safety so that if the tests are conducted at a distance of, for example 1 ft., the generator should not be permitted to be placed closer than 1.5 ft. (i.e. a 50% margin of safety). Such added fire safety requirement is not included in the proposal to the IFC.
11. The proposal to the IFC does not discuss the composition of the generators because the key issue is ensuring that a fire that destroys all combustible materials does not cause wall ignition, irrespective of the materials used to construct the generator.

Heat release rate of siding materials (calorimeter testing)
Vinyl (PVC): 187 kW/m^2
Wood (Cedar:) 309 kW/m^2
Polypropylene: 546 kW/m^2

BIBLIOGRAPHY

Cost Impact: Will increase the cost of construction
There are no requirements at present for potentially unsafe installation of generators.

RB169-16 : R327 (NEW)-HIRSCHLER11963

Public Hearing Results

Committee Action: **Disapproved**

Committee Reason: We shouldn't be referencing all these other documents. The IRC is intended to be a stand alone code. This is not typically an issue. Permits are already required for these items under documents other than the IRC.

Assembly Action: **None**

Individual Consideration Agenda

Public Comment 1:

Proponent : Marcelo Hirschler, representing GBH International (gbhint@aol.com) requests Approve as Modified by this Public Comment.

Modify as Follows:

2015 International Residential Code

SECTION R327 ~~Installation of stationary generators not required by code~~ STATIONARY GENERATORS

~~**R327.1 General** The installation of stationary generators not required by code shall comply with the applicable requirements of the International Fire Code and NFPA 37.~~

R327.1 Installation Residential stationary generators shall be installed in accordance with the applicable requirements of NFPA 37 and the International Fire Code.

Commenter's Reason: During the proposal stage it was recommended that references to other codes be added and this was eliminated from the public comment. The proposal addresses a problem that is encountered frequently in residential environments where separation distances are small and generator fires can cause significant damage to the residence if the generator is not properly installed. One potential problem is that the generator's fuel shut-off valve fails to close, resulting in a gas leak from the unit. Another potential problem is the rupture of the gas connection between the generator and the residence, which can lead to flames being directed at the house walls. Some jurisdictions have adopted the requirements from NFPA 37 but most jurisdictions are silent on this potential fire hazard and a small pointer will help fire code officials.
The IMC and IFGC reference NFPA 37 but do not address residential generators.

RB170-16

IRC: 202 (New), R327 (New), R327.1 (New), R327.2 (New), R327.3 (New).

Proposed Change as Submitted

Proponent : Edward Kulik, representing Building Code Action Committee (bcac@iccsafe.org)

2015 International Residential Code

SECTION 202 DEFINITIONS

VEHICULAR GATE. A gate that is intended for use at a vehicular entrance or exit to the lot of a one- or two- family dwelling and that is not intended for use by pedestrian traffic.

SECTION R327 AUTOMATIC VEHICULAR GATES

R327.1 General. Automatic vehicular gates shall comply with the requirements of Sections R327.2 and R327.3.

R327.2 Vehicular gates intended for automation. Vehicular gates intended for automation shall be designed, constructed and installed to comply with the requirements of ASTM F 2200.

R327.3 Vehicular gate openers. Vehicular gate openers shall be listed in accordance with UL 325.

Reference standards type: This is an update to reference standard(s) already in the ICC Code Books
Add new standard(s) as follows:
To be added to Chapter 43, Referenced Standards:
ASTM F2200-14, Standard Specification for Automated Vehicular Gate Construction

and

UL 325-2013, Standard for Door, Drapery, Gate, Louver, and Window Operators and Systems

Reason: We are proposing that the current provisions as contained in Appendix O be moved into the main body of the code. The language continues to not require the use of automated vehicular gates, but where gates intended for automation are provided sets necessary and appropriate minimum safety requirements as established in the applicable consensus standards. The provisions belong in the main body of the code for consistency with similar provisions contained in the main body of both the International Building Code (Section 3110) and the International Fire Code (Sections 503.5 and 503.6.) Automated vehicular gate safety is important in all applications; therefore one- and two-family dwellings should be covered by this requirement and not be an option for jurisdictions adopting the IRC.

This proposal is submitted by the ICC Building Code Action Committee (BCAC). BCAC was established by the ICC Board of Directors to pursue opportunities to improve and enhance assigned International Codes or portions thereof. In 2014 and 2015 the BCAC has held 5 open meetings. In addition, there were numerous Working Group meetings and conference calls for the current code development cycle, which included members of the committee as well as any interested party to discuss and debate the proposed changes. Related documentation and reports are posted on the BCAC website at: **BCAC** (http://www.iccsafe.org/codes-tech-support/codes/code-development-process/building-code-action-committee-bcac/)

Cost Impact: Will increase the cost of construction
This proposal may increase the cost of construction as it would mandate minimum standards for the design, construction and installation or vehicular gates only where they are provided. This would not increase the cost of construction where vehicular gates currently meet these standards.

RB170-16 : R327 (NEW)-KULIK11029

Public Hearing Results

Committee Action: **Disapproved**

Committee Reason: These provisions would work very well in an appendix.

Assembly Action: **None**

Individual Consideration Agenda

Proponent : Edward Kulik, representing Building Code Action Committee (bcac@iccsafe.org) requests Approve as Submitted.

Commenter's Reason: Minimum life safety requirements should be covered in the code, not the appendices. If this code is adopted without the appendices, then there would not be any requirements in the jurisdiction to appropriately address the hazards associated where automatic vehicular gates are installed. Further, the IBC currently has these requirements within the main body of the code. The safety risk is no different in a residential application than those covered in the IBC.
This public comment is submitted by the ICC Building Code Action Committee (BCAC). BCAC was established by the ICC Board of Directors to pursue opportunities to improve and enhance assigned International Codes or portions thereof. Between 2014 and 2016 the BCAC has held 8 open meetings. In addition, there were numerous Working Group meetings and conference calls for the current code development cycle, which included members of the committee as well as any interested party to discuss and debate the proposed public comments. Related documentation and reports are posted on the BCAC website at: BCAC (http://www.iccsafe.org/codes-tech-support/codes/code-development-process/building-code-action-committee-bcac/)

RB170-16

RB175-16
IRC: R401.3.

Proposed Change as Submitted

Proponent : Kevin McOsker, representing Southern Nevada Chapter of ICC (ktm@ClarkCountyNV.gov)

2015 International Residential Code

Revise as follows:

R401.3 Drainage. Surface drainage shall be diverted to a storm sewer conveyance or other *approved* point of collection that does not create a hazard. *Lots* shall be graded to drain surface water away from foundation walls. The *grade* shall fall a minimum of 6 inches (152 mm) within the first 10 feet (3048 mm).

Exception: Where *lot lines*, walls, slopes or other physical barriers prohibit 6 inches (152 mm) of fall within 10 feet (3048 mm), drains or swales shall be constructed to ensure drainage away from the structure. ~~Impervious~~ Drains or swales used for this purpose shall be sloped a minimum of 1% along the flow line when located within 10 feet (3048mm) of the builidng foundation. Low expansive, low collapsible, low soluble soil conditions or impervious surfaces within 10 feet (3048 mm) of the building foundation shall be sloped a minimum of 2 percent away from the building.

Reason: A minimum 1% slope of the swale in the direction of flow will provide positive drainage away from the building in location where a full 10' of slope in a perpendicular direction away from the foundation is not provided.
Soil conditions not affected by the presence of water are added to the allowance for a reduced slope that is currently allowed for impervious surfaces. These soils are not negatively impacted by the presence of water and therefore a reduced slope (from 5% to 2%) can be justified.

Cost Impact: Will not increase the cost of construction
The minimum slope on the swale may slightly increase costs, however, the addtional conditions where the reduced slope is allowed would decrease costs.

RB175-16 :
R401.3-
MCOSKER12182

Public Hearing Results

Committee Action: **Disapproved**

Committee Reason: The one percent minimum slope will be difficult to meet for zero lot buildings. This could create conflicts with the site development plans

Assembly Action: **None**

Individual Consideration Agenda

Proponent : Kevin McOsker, representing Southern Nevada Chapter of ICC (ktm@ClarkCountyNV.gov) requests Approve as Submitted.

Commenter's Reason: The code proposal's intent was to address a prescriptive minimum slope of the swale that is already noted in the code and an allowance for additional soil conditions where a 2% cross-slope may be acceptable. The committee's reason for disapproval was based on properties with zero lot lines and the conflict this may create with site development plans. Projects with zero lot lines would still require drainage away from foundations to protect the building from water and drainage potentially undermining the foundation. Site plans still need to address drainage away from the foundation regardless of where the building is located with respect to the property line, however, a minimum slope of a swale would provide code users an absolute minimum slope needed at the time of design and plan review.

RB175-16

RB190-16
IRC: R301.5.

Proposed Change as Submitted

Proponent : Edwin Huston, representing National Council of Structural Engineers' Associations (NCSEA) (huston@smithhustoninc.com); Karl Rubenacker, representing Codes & Standards Committee, Structural Engineer's Association of New York (karl.rubenacker@gmsllp.com)

2015 International Residential Code

Revise as follows:

TABLE R301.5
MINIMUM UNIFORMLY DISTRIBUTED LIVE LOADS (in pounds per square foot)

USE	LIVE LOAD
Uninhabitable attics without storage[b]	10
Uninhabitable attics with limited storage[b,g]	20
Habitable attics and attics served with fixed stairs	30
Balconies (exterior) and decks[e]	~~40~~60
Fire escapes	40
Guards and handrails[d]	200[h]
Guard in-fill components[f]	50[h]
Passenger vehicle garages[a]	50[a]
Rooms other than sleeping rooms	40
Sleeping rooms	30
Stairs	40[c]

For SI: 1 pound per square foot = 0.0479 kPa, 1 square inch = 645 mm^2,1 pound = 4.45 N.
a. Elevated garage floors shall be capable of supporting a 2,000-pound load applied over a 20-square-inch area.
b. Uninhabitable *attics* without storage are those where the clear height between joists and rafters is not more than 42 inches, or where there are not two or more adjacent trusses with web configurations capable of accommodating an assumed rectangle 42 inches in height by 24 inches in width, or greater, within the plane of the trusses. This live load need not be assumed to act concurrently with any other live load requirements.
c. Individual stair treads shall be designed for the uniformly distributed live load or a 300-pound concentrated load acting over an area of 4 square inches, whichever produces the greater stresses.
d. A single concentrated load applied in any direction at any point along the top.
e. See Section R507.1 for decks attached to *exterior walls*.
f. *Guard* in-fill components (all those except the handrail), balusters and panel fillers shall be designed to withstand a horizontally applied normal load of 50 pounds on an area equal to 1 square foot. This load need not be assumed to act concurrently with any other live load requirement.
g. Uninhabitable *attics* with limited storage are those where the clear height between joists and rafters is not greater than 42 inches, or where there are two or more adjacent trusses with web configurations capable of accommodating an assumed rectangle 42 inches in height by 24 inches in width, or greater, within the plane of the trusses. The live load need only be applied to those portions of the joists or truss bottom chords where all of the following conditions are met:
1. The *attic* area is accessible from an opening not less than 20 inches in width by 30 inches in length that is located where the clear height in the *attic* is not less than 30 inches.
2. The slopes of the joists or truss bottom chords are not greater than 2 inches vertical to 12 units horizontal.
3. Required insulation depth is less than the joist or truss bottom chord member depth.
The remaining portions of the joists or truss bottom chords shall be designed for a uniformly distributed concurrent live load of not less than 10 pounds per square foot.
h. Glazing used in handrail assemblies and *guards* shall be designed with a safety factor of 4. The safety factor shall be applied to each of the concentrated loads applied to the top of the rail, and to the load on the in-fill components. These loads shall be determined independent of one another, and loads are assumed not to occur with any other live load.

Reason: For historical context, the 2006 IBC and 2005 ASCE 7-05 contained similar language in that balconies and decks were treated as different uses and had different uniform loading criteria. Then the IBC diverged from matching ASCE 7 in 2006 under S9-06/07 when the IBC combined the separate occupancy categories balconies and decks into one item, with the uniform loading set as the "Same as occupancy served" force level. ASCE 7-10 followed suit in combining balconies and decks as a single item, however the uniform loading was set at 1.5 times the live load for the area served, with an upper bound not required to be greater than 100 psf. To harmonize the ASCE and IBC and IRC live loading requirements, this proposal is using the ASCE 7 load requirements for the baseline minimum live loads on balconies and decks.

Cost Impact: Will increase the cost of construction
For an ASCE 7 compliant design there is no increase in loading and thus no change in construction cost. For an IBC/IRC

compliant design the loading of balconies and decks will increase possibly increasing the cost of structural framing for the support of these structures.

RB190-16 : R301.5-HUSTON13589

Public Hearing Results

Committee Action: **Disapproved**

Committee Reason: The committee felt increasing the load above the area served is not justified. Based on the committees prior action on RB26-16 and RB27-16.

Assembly Action: **None**

Individual Consideration Agenda

Proponent : Scott Campbell, representing Portland Cement Association (scampbell@cement.org) requests Approve as Submitted.

Commenter's Reason: The proposed change is meant to bring the IRC in line with ASCE 7-16 and the IRC prior to 2009 regarding balcony loads. The live load on balconies was arbitrarily reduced during a previous code cycle, and the ASCE 7 committee on live loads debated the changes with a view towards incorporating them into the ASCE standard. However, it was the consensus of the committee that the live loads should be increased based on previous experience, professional judgement, and the documented failures of balconies. The proposal should be approved as submitted to ensure that the IRC reflects the properly technically vetted live load criteria developed in the ANSI accredited ASCE standards development process.

RB190-16

RB197-16
IRC: R506.2.3.

Proposed Change as Submitted

Proponent : Kevin McOsker, representing Southern Nevada Chapter of ICC (ktm@ClarkCountyNV.gov)

2015 International Residential Code

R506.2.3 Vapor retarder. A ~~6-mil~~ 10-mil (~~0.006~~ 0.010 inch; ~~152~~ 254 µm) polyethylene or *approved* vapor retarder conforming to ASTM E1745 with joints lapped not less than 6 inches (152 mm) shall be placed between the concrete floor slab and the base course or the prepared subgrade where no base course exists.

Exception: The vapor retarder is not required for the following:

1. Garages, utility buildings and other unheated *accessory structures*.
2. For unheated storage rooms having an area of less than 70 square feet (6.5 m^2) and carports.
3. Driveways, walks, patios and other flatwork not likely to be enclosed and heated at a later date.
4. Where *approved* by the *building official*, based on local site conditions.

Reason: ACI 302.1R-04 "Guide for Concrete Floors and Slab Construction" highly recommends 10 mil vapor retarder in compliance with ASTM E1745 for concrete floors and slabs on grade (reference Chapter 3 Section 3.2.3). Where moisture sensitive flooring (carpet, wood, linoleum, etc....) will be installed over the concrete, a vapor retarder minimizes the transmission of moisture through the slab to the floor. The increased thickness provides addition resiliency during construction and increases the resistance to moisture transmission for the life of the building. The current exemption addresses situations where moisture sensitive flooring is unlikely to be installed.

Cost Impact: Will increase the cost of construction
The change in cost would be the related to the required specification of the material and the thickness of the vapor retarder.

RB197-16 :
R506.2.3-
MCOSKER12184

Public Hearing Results

Committee Action: **Disapproved**

Committee Reason: This change would create an inconsistency with the foundation drainage requirements for wood foundations in section R405.2.2. The current thickness is code minimum and a thicker vapor retarder is already allowed.

Assembly Action: **None**

Individual Consideration Agenda

Public Comment 1:

Proponent : Kevin McOsker, representing Southern Nevada Chapter of ICC (ktm@ClarkCountyNV.gov) requests Approve as Modified by this Public Comment.

Modify as Follows:

2015 International Residential Code

R405.2.2 Vapor retarder. A ~~6-mil-thick~~ 10-mil-thick (~~0.15 mm~~ 0.010 inch; 254µm) polyethylene vapor retarder shall be applied over the porous layer with the *basement* floor constructed over the polyethylene.

Commenter's Reason: The committee's reason to disapprove this code change proposal was based on the inconsistency this created with section 405.2.2 for wood foundations. This public comment adds a modified language to section 405.2.2, to be consistent with the modifications made to section 506.2.3.

RB197-16

RB200-16

IRC: R507, R507.5.1(2) (New), R507.6, R507.7, R507.7.1.

Proposed Change as Submitted

Proponent : Charles Bajnai, representing Deck Code Coalition and Chesterfield County, VA; and North American Deck and Railing Association (NADRA) (bajnaic@chesterfield.gov)

2015 International Residential Code

SECTION R507 EXTERIOR DECKS

~~**R507.6**~~ **R507.5 Deck Beams.** Maximum allowable spans for wood deck beams, as shown in Figure ~~R507.6~~ R507.5, shall be in accordance with Table ~~R507.6~~ R507.5. Beam plies shall be fastened with two rows of 10d (3-inch × 0.128-inch) nails minimum at 16 inches (406 mm) on center along each edge. Beams shall be permitted to cantilever at each end up to one-fourth of the ~~actual~~ adjacent beam span. ~~Splices~~ Deck beams of ~~multispan beams~~ other materials shall be ~~located at interior post locations~~ permitted when designed in accordance with accepted engineering practice.

~~**R507.7**~~ **R507.5.1 Deck ~~joist and deck~~ beam bearing.** The ends of each ~~joist and~~ beam shall have not less than $1^1/_2$ inches (38 mm) of bearing on wood or metal and not less than 3 inches (76 mm) on concrete or masonry for the entire width of the beam. ~~Joist framing into the side of a ledger board or beam shall be supported by approved joist hangers. Joists~~ Where multispan beams bear on intermediate posts, each ply must have full bearing on ~~a beam shall be connected to~~ the ~~beam to resist lateral displacement~~ post in accordance with Figures R507.5.1(1) and R507.5.1(2).

~~**R507.7.1**~~ **R507.5.2 Deck post to deck beam connection.** Deck beams shall be attached to wood deck posts in a manner capable of resisting vertical and horizontal applied loads. Connections shall be in accordance with ~~Figure R507.7.1 or by other equivalent means capable to resist lateral displacement~~ Figures R507.5.1(1) and R507.5.1.(2). Manufactured post-to-beam connectors shall be sized for the post and beam sizes. All bolts shall have washers under the head and nut.

- ~~**Exception:** Where deck beams bear directly on footings in accordance with Section R507.8.1.~~

Deck beams shall be attached to concrete or masonry piers in a manner capable of resisting vertical and horizontal applied loads. Other attachment methods shall be permitted.

TABLE ~~R507.6~~ R507.5
DECK BEAM SPAN LENGTHS[a, b, g] (ft. - in.)

SPECIES[c]	SIZE[d]	DECK JOIST SPAN LESS THAN OR EQUAL TO: (feet)						
		6	8	10	12	14	16	18
Southern pine	1- 2 x 6	4-11	4-0	3-7	3-3	3-0	2-10	2-8
	1- 2 x 8	5-11	5-1	4-7	4-2	2-10	3-7	3-5
	1- 2 x 10	7-0	6-0	5-5	4-11	4-7	4-3	4-0
	1- 2 x 12	8-3	7-1	6-4	5-10	5-5	5-0	4-9
	2 – 2 × 6	6-11	5-11	5-4	4-10	4-6	4-3	4-0
	2 – 2 × 8	8-9	7-7	6-9	6-2	5-9	5-4	5-0
	2 – 2 × 10	10-4	9-0	8-0	7-4	6-9	6-4	6-0
	2 – 2 × 12	12-2	10-7	9-5	8-7	8-0	7-6	7-0
	3 – 2 × 6	8-2	7-5	6-8	6-1	5-8	5-3	5-0
	3 – 2 × 8	10-10	9-6	8-6	7-9	7-2	6-8	6-4
	3 – 2 × 10	13-0	11-3	10-0	9-2	8-6	7-11	7-6
	3 – 2 × 12	15-3	13-3	11-10	10-9	10-0	9-4	8-10
Douglas fir-larch[e], hem-fir[e], spruce-pine-fir[e], redwood, western cedars, ponderosa pine[f], red pinef	3 × 6 or 2 – 2 x 6	5-5	4-8	4-2	3-10	3-6	3-1	2-9
	3 × 8 or 2 – 2 × 8	6-10	5-11	5-4	4-10	4-6	4-1	3-8
	3 × 10 or 2 – 2 × 10	8-4	7-3	6-6	5-11	5-6	5-1	4-8
	3 × 12 or 2 – 2 × 12	9-8	8-5	7-6	6-10	6-4	5-11	5-7
	4 × 6	6-5	5-6	4-11	4-6	4-2	3-11	3-8
	4 × 8	8-5	7-3	6-6	5-11	5-6	5-2	4-10
	4 × 10	9-11	8-7	7-8	7-0	6-6	6-1	5-8
	4 × 12	11-5	9-11	8-10	8-1	7-6	7-0	6-7
	3 – 2 × 6	7-4	6-8	6-0	5-6	5-1	4-9	4-6
	3 – 2 × 8	9-8	8-6	7-7	6-11	6-5	6-0	5-8
	3 – 2 × 10	12-0	10-5	9-4	8-6	7-10	7-4	6-11
	3 – 2 × 12	13-11	12-1	10-9	9-10	9-1	8-6	8-1

For SI: 1 inch = 25.4 mm, 1 foot = 304.8 mm, 1 pound per square foot = 0.0479 kPa, 1 pound = 0.454 kg.

a. Ground snow load, live load = 40 psf, dead load = 10 psf, L/Δ = 360 at main span, L/Δ = 180 at cantilever with a 220-pound point load applied at the end.

b. Beams supporting deck joists from one side only.

c. No. 2 grade, wet service factor.

d. Beam depth shall be greater than or equal to depth of joists with a flush beam condition.

e. Includes incising factor.

f. Northern species. Incising factor not included.

g. Beam cantilevers are limited to adjacent beam span divided by 4.

FIGURE ~~R507.7.1~~ R507.5.1(1)
TYPICAL DECK BEAM TO DECK POST CONNECTION

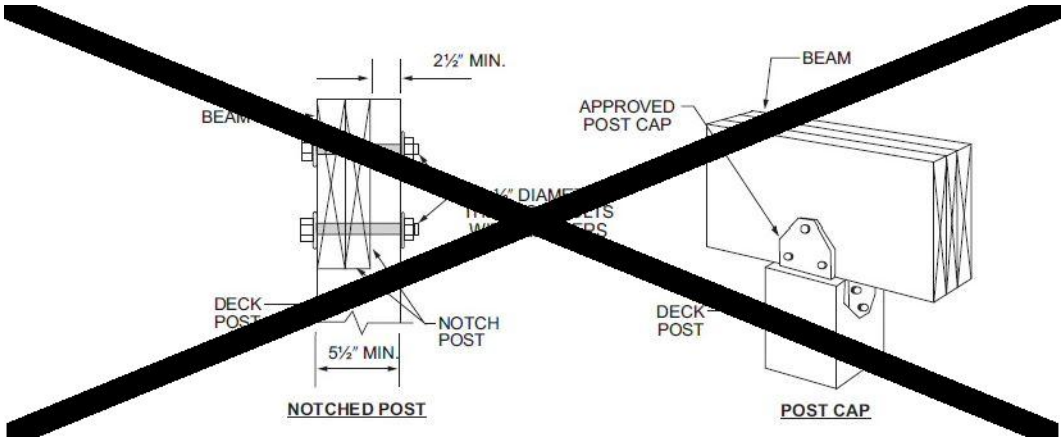

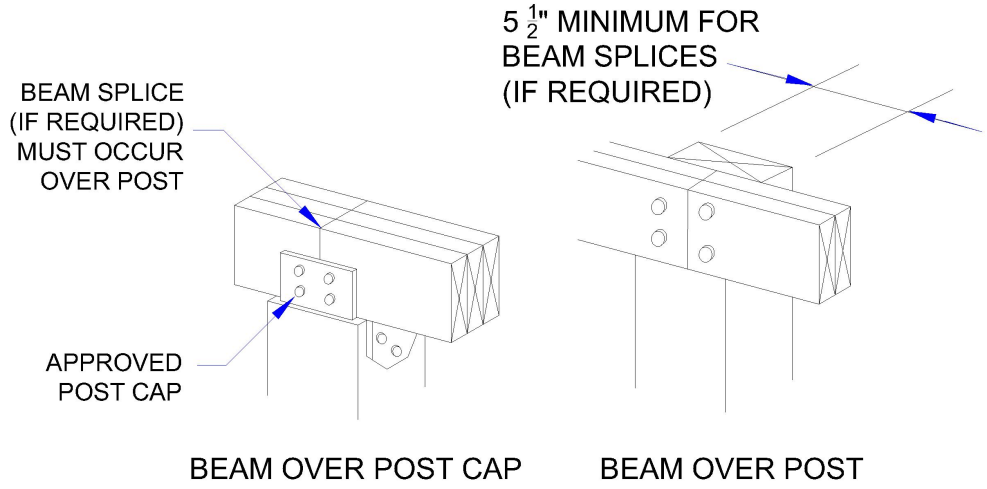

For SI: 1 inch = 25.4 mm.

FIGURE R507.5.1(2)
NOTCHED POST-TO-BEAM CONNECTION

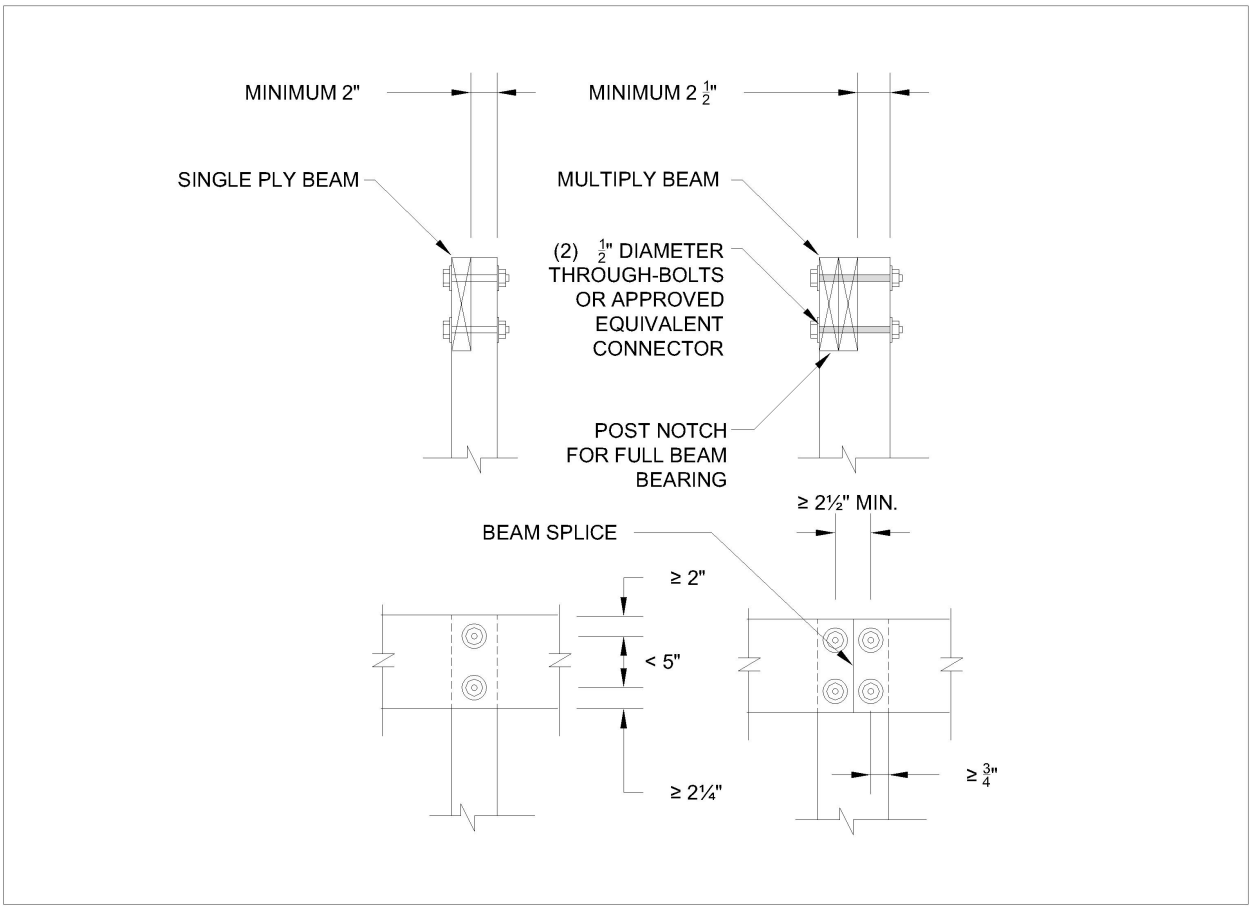

FIGURE ~~R507.6~~ R507.5
TYPICAL DECK BEAM SPANS

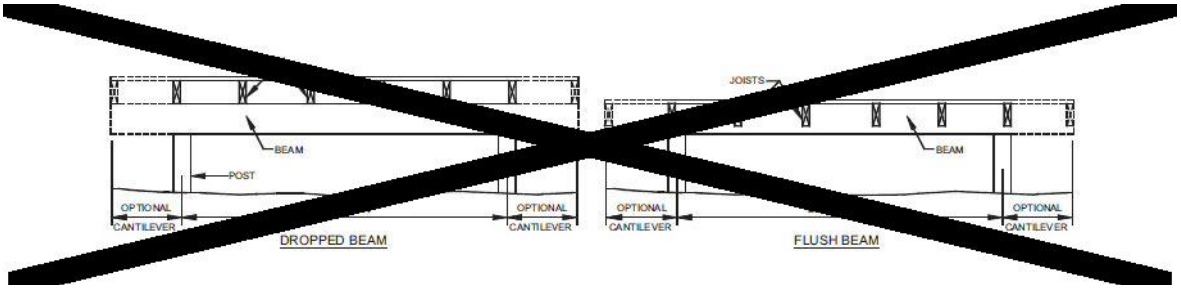

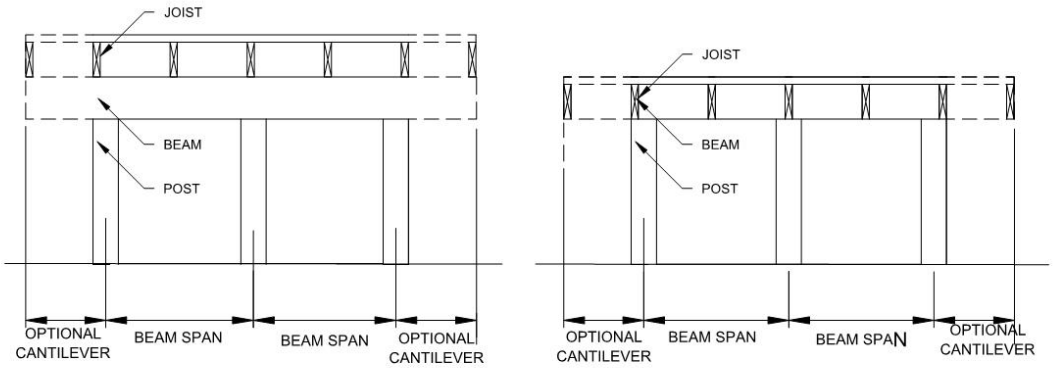

DROPPED BEAM FLUSH BEAM

Reason:

WHAT: This code proposal amends these things:

1. It moves together sections R507.6, R507.7 and R507.1 into a new section *BEAMS*,
2. It provides better figures to show how beam splices are to occur over posts,
3. It revises the beam span figure by showing a beam spanning multiple deck posts.
4. And the beam table was expanded to cover single ply beams used for small decks, porches or landings.

WHY: The Deck Code Coalition (DCC) thought the current wording needed improvement. Also the figures needed refinement to reflect the wording changes and cover more options. The committee wanted to add flexibility to the beam table and allow for single ply beams.

The Deck Code Coalition (DCC) is a diverse group of stakeholders, including building officials, industry associations, product manufacturers, design professionals, and academia who have worked since the 2012 IRC code development cycle in an effort to consolidate and improve deck construction methods from across the country.

Our goals are threefold:

1. Consolidate existing code scattered throughout the IRC under the newly expanded Section R507. Being able to easily locate all deck related code provisions in one section equally serves the builder, code official and design professional to a safer, code-conforming deck.
2. Create realistic, fact-based, prescriptive solutions to fill critical gaps in the current deck code. Many parts of existing deck code rely on subjective interpretations by the reader leading to an inconsistent approach to meeting minimum code.
3. Maintain and promote a safer deck structure without unduly burdening the builder. In all cases the DCC want to offer safe minimum requirements without stifling the creativity of the design professional or builder.

Cost Impact: Will not increase the cost of construction
There is no cost impact. It may even save a few dollars by allowing single ply beams.

RB200-16 : R507-BAJNAI11644

Public Hearing Results

Committee Action: **Disapproved**

Committee Reason: The language in Section R507.2 is too confusing. The modification that was disapproved would help. The proponent should rework and bring this back in a public comment

Assembly Action: **None**

Individual Consideration Agenda

Public Comment 1:

Proponent : Charles Bajnai, representing Deck Code Coalition and Chesterfield County, VA; and North American Deck and Railing Association (NADRA) (bajnaic@chesterfield.gov) requests Approve as Modified by this Public Comment.

Modify as Follows:

2015 International Residential Code

R507.5 Deck Beams. Maximum allowable spans for wood deck beams, as shown in Figure R507.5, shall be in accordance with Table R507.5. Beam plies shall be fastened with two rows of 10d (3-inch × 0.128-inch) nails minimum at 16 inches (406 mm) on center along each edge. Beams shall be permitted to cantilever at each end up to one-fourth of the ~~adjacent~~ allowable beam span. Deck beams of other materials shall be permitted when designed in accordance with accepted engineering practice.

R507.5.1 Deck beam bearing. The ends of each beam shall have not less than $1^1/_2$ inches (38 mm) of bearing on wood or metal and not less than 3 inches (76 mm) on concrete or masonry for the entire width of the beam. Where multispan beams bear on intermediate posts, each ply must have full bearing on the post in accordance with Figures R507.5.1(1) and R507.5.1(2).

R507.5.2 Deck ~~post~~ beam connections to ~~deck beam connection~~ supports. Deck beams shall be attached to ~~wood deck posts~~ supports in a manner capable of transferring ~~resisting~~ vertical loads and resisting horizontal ~~applied loads~~ displacement. ~~Connections~~ Deck beam connections to wood posts shall be in accordance with Figures R507.5.1(1) and R507.5.1.(2). Manufactured post-to-beam connectors shall be sized for the post and beam sizes. All bolts shall have washers under the head and nut. ~~Deck beams shall be attached to concrete or masonry piers in a manner capable of resisting vertical and horizontal applied loads. Other attachment methods shall be permitted.~~

Commenter's Reason:

R507.5:

This public comment corrects an improper word choice in the original proposal: the allowed cantilever should be one fourth of the allowed span in Table R507.5, not one fourth of the adjacent span. This is based upon how the calculations for the table were made, which always assumed a one fourth cantilever.

R507.5.2:

1. The function of the beam connection is to resist horizontal displacement and transfer vertical load.
2. The last sentence was intended to allow for alternative deck beam attachments; however, where it is currently located, the word "other" suggests attachments that do not resist vertical or horizontal applied loads. This was obviously not the intent and is easiest to fix by striking the sentence.

RB200-16

RB201-16

IRC: R507, R507.1, R507.1.1 (New), R507.1.2 (New), R507.5.

Proposed Change as Submitted

Proponent : Charles Bajnai, representing Deck Code Coalition and Chesterfield County, VA; and North American Deck and Railing Association (NADRA) (bajnaic@chesterfield.gov)

2015 International Residential Code

SECTION R507 EXTERIOR DECKS

R507.1 Decks. ~~Wood-framed~~

Light-framed decks shall be constructed in accordance with this section or designed in accordance with Section R301 for materials and conditions not prescribed herein. Where ~~supported by attachment to an exterior wall~~ joists or beams are cantilevered, ~~decks shall be positively anchored to~~ the ~~primary structure and designed for both vertical and lateral loads.~~

~~Such attachment shall not be accomplished by the use of toenails or nails subject to withdrawal. Where positive connection to the primary building structure cannot be verified during inspection, decks shall be self-supporting. For decks with cantilevered~~ supporting framing ~~members connections to exterior walls or other framing members~~ shall be designed ~~and constructed~~ to resist uplift resulting from the ~~full~~ live ~~load~~ loads specified in ~~Table~~ R301.5 acting on the cantilevered portion of the deck.

R507.1.1 Freestanding decks. Freestanding decks shall be self-supporting and constructed to provide a complete load path to transfer both vertical and lateral loads to their foundation. The lateral resistance shall be permitted to be designed in accordance with accepted engineering practice.

R507.1.2 Decks attached to another structure Decks which are not freestanding shall be attached to a structure that provides a complete load path for both vertical and lateral loads in accordance with Section R507.9. Such attachment shall not be accomplished by the use of toenails or nails subject to withdrawal. Where connections to the supporting structure cannot be verified, decks shall be freestanding in accordance with Section R507.1.1.

R507.5 Deck joists.

Maximum allowable spans for wood deck joists, as shown in Figure R507.5, shall be in accordance with Table R507.5. Deck joists shall be permitted to cantilever not greater than one-fourth of the actual, adjacent joist span.

FIGURE R507.5
TYPICAL DECK JOIST ~~SPANS~~ SPAN

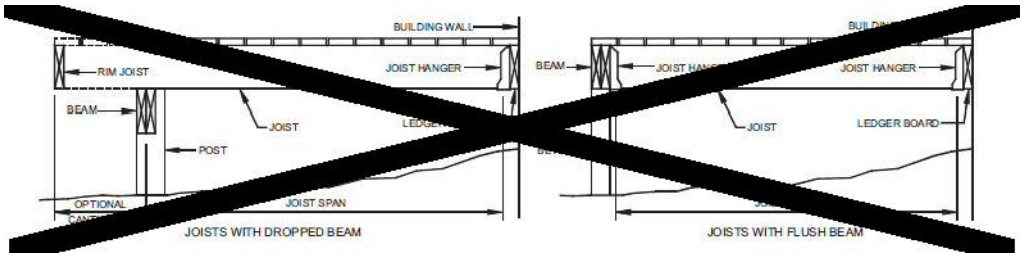

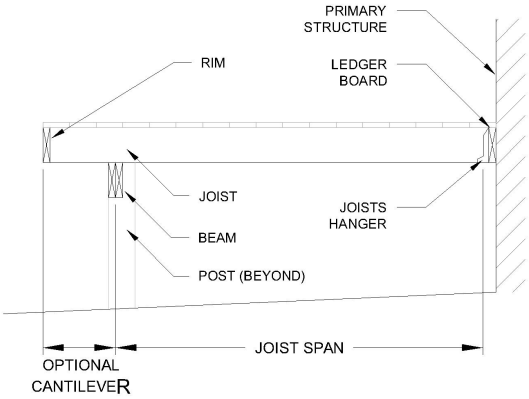

CANTILEVERED JOISTS WITH DROPPED BEAM

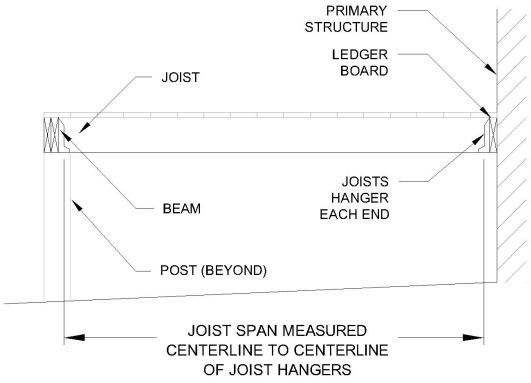

JOISTS WITH FLUSH BEAM

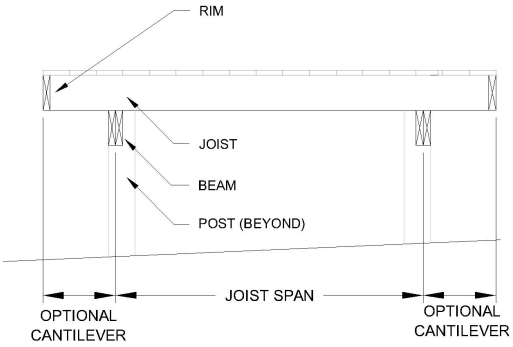

JOISTS ON FREESTANDING DECK WITH DROPPED BEAM

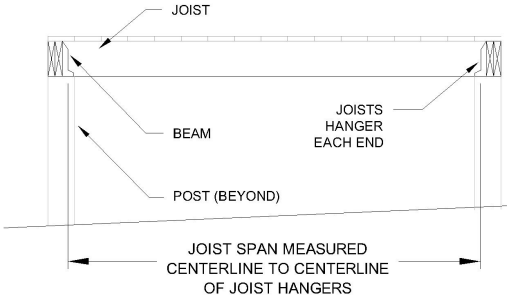

JOISTS ON FREESTANDING DECK WITH FLUSH BEAM

Reason:

WHAT: This code proposal offers new language to specifically allow freestanding decks. This code proposal establishes a differentiation between freestanding and ledgered decks.

WHY: Freestanding decks are popular across the country for lots of different applications, yet there has never been any design considerations provided in the IRC. The Deck Code Coalition (DCC) realized that in the absence of prescriptive specifications, many jurisdictions have deferred to DCA-6 – but DCA-6 only handles "ledgered decks". This code change provides prescriptive design requirements for freestanding decks.

The Deck Code Coalition (DCC) is a diverse group of stakeholders, including building officials, industry associations, product manufacturers, design professionals, and academia who have worked since the 2012 IRC code development cycle in an effort to consolidate and improve deck construction methods from across the country.

Our goals are threefold:

1. Consolidate existing code scattered throughout the IRC under the newly expanded Section R507. Being able to easily locate all deck related code provisions in one section equally serves the builder, code official and design professional to a safer, code-conforming deck.
2. Create realistic, fact-based, prescriptive solutions to fill critical gaps in the current deck code. Many parts of existing deck code rely on subjective interpretations by the reader leading to an inconsistent approach to meeting minimum code.
3. Maintain and promote a safer deck structure without unduly burdening the builder. In all cases the DCC want to offer safe minimum requirements without stifling the creativity of the design professional or builder.

Cost Impact: Will not increase the cost of construction
There is no cost impact by offering freestanding decks which have been built for millenium.

RB201-16 : R507.1-BAJNAI10476

Public Hearing Results

Committee Action: **Disapproved**

Committee Reason: The proposal lacks prescriptive lateral bracing. It does not require designed lateral bracing but permits it.

Assembly Action: **None**

Individual Consideration Agenda

Public Comment 1:

Proponent : Charles Bajnai, representing Deck Code Coalition, Chesterfield Co, VA (bajnaic@chesterfield.gov) requests Approve as Modified by this Public Comment.

Modify as Follows:

2015 International Residential Code

R507.1.1 Freestanding decks. Freestanding decks shall be ~~self-supporting and constructed~~ limited in height to ~~provide a complete load path~~ 4'-6" measured from the underside of the beam to ~~transfer both vertical and lateral loads to their foundation~~ the finished grade where constructed in accordance with Figure R507.1.1. ~~The lateral resistance~~ Freestanding decks greater than 4'-6" above grade shall be ~~permitted to be~~ designed in accordance with ~~accepted engineering practice~~ R301.

FIGURE R507.1.1
Freestanding decks.

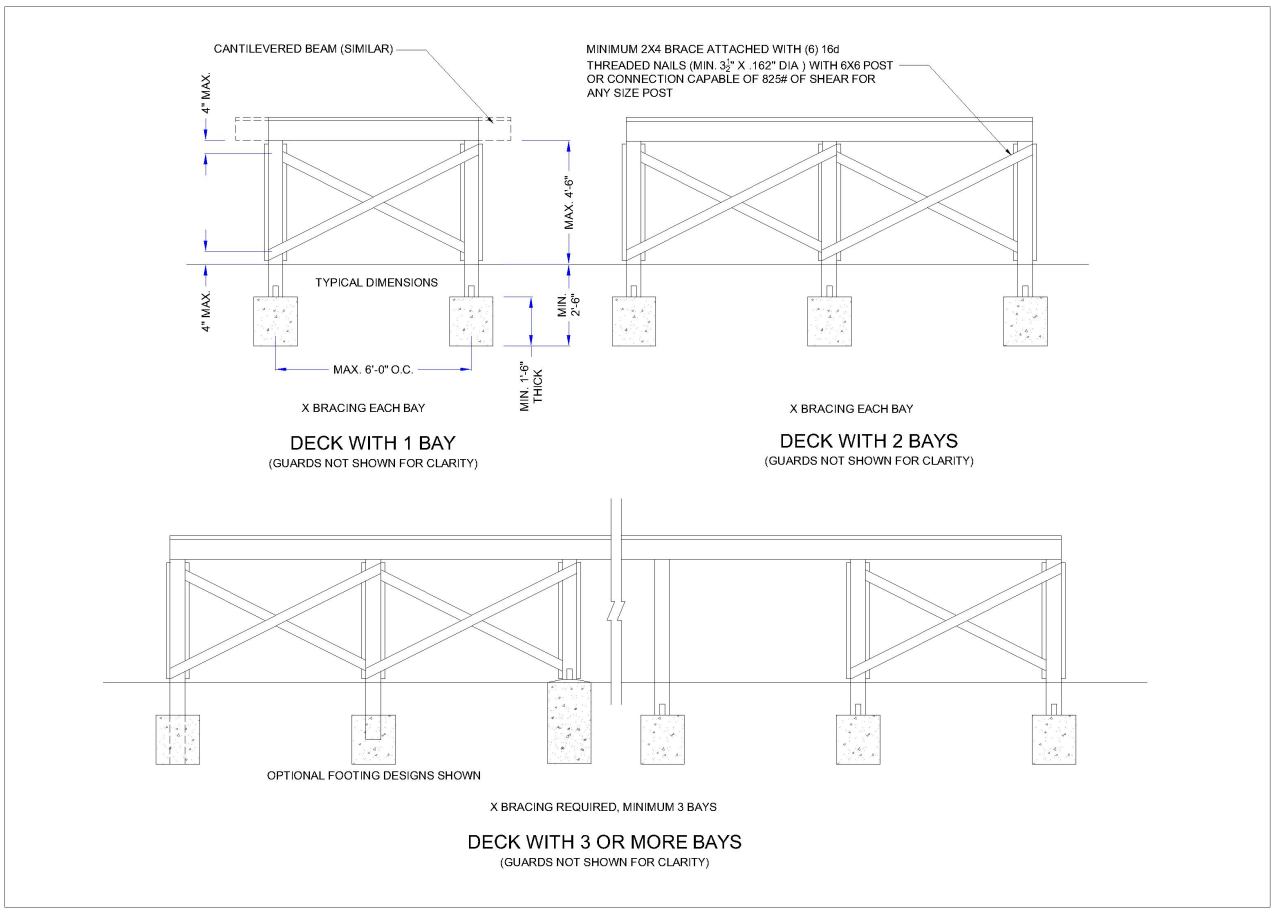

R507.1.1.1 Lateral bracing. Freestanding decks shall be constructed to provide a complete load path to transfer both vertical and lateral loads to their foundation. Lateral bracing shall be provided between adjacent posts in accordance with Figure R507.1.1

R507.1.1.2 Footings for freestanding decks. Footings shall be sized for vertical loads. For lateral load resistance, footings for freestanding decks shall comply with all the following:

1. Have a minimum 18" thickness (height),
2. Be a minimum 30" below grade, but not necessarily below the frost line,
3. Have a lateral load connection between post and footing.

R507.1.3 Decks in flood hazard areas. Decks in flood hazard areas shall comply with the requirements of Section R507 and Section R322.

Commenter's Reason: During the committee hearings, it was correctly noted that our proposal lacked prescriptive language for lateral bracing of freestanding decks. This continues to leave the building officials without acceptable criteria unless engineered.

The Deck Code Coalition intentionally had minimized the language for lateral bracing because it was highly controversial, misunderstood and difficult to calculate based on engineering.

The reason there has been no acceptable solution up to this point is that there has been no testing to determine the quantifiable lateral loads. Based on preliminary testing by Washington State University, it has been determined that the lateral loads imposed by college students danging on a 12x12 deck is approximately 12 pounds per square foot. While not very many decks would ever experience such loads, we now have something to base our analysis on.

The prescriptive limitations in this public comment are based on the above-mentioned testing. For decks taller than 4'-6", the DCC did not feel comfortable writing prescriptive language that would apply for all imaginable varieties of deck heights, post spacing, materials and loading conditions.

While this public comment appears to be quite restrictive with regards to bracing and height limitations, this public comment passes engineering scrutiny. If this public comment does not pass, the onus of bracing a freestanding deck will be placed back to the designer and the building official.

Public Comment 2:

Proponent : Charles Bajnai, representing Deck Code Coalition, Chesterfield Co, VA (bajnaic@chesterfield.gov) requests Approve as Modified by this Public Comment.

Modify as Follows:

2015 International Residential Code

R507.1.1 Freestanding decks. Freestanding decks shall be self-supporting and constructed to provide a complete load path to transfer both vertical and lateral loads to their foundation~~. The lateral resistance shall be permitted to be designed~~ in accordance with accepted engineering ~~practice~~ principles.

R507.1.3 Decks in flood hazard areas. Decks in flood hazard areas shall comply with the requirements of Section R507 and Section R322.

Commenter's Reason: The Deck Code Coalition does not sense opposition to putting freestanding decks into the code, just how much prescriptive language is required to ensure deck safety. The DCC thought that less might be better than more with the original draft of RB201, but that did not seem to appease the opposition who wanted to know how, where and how much bracing is required.

There are no quick and easy prescriptive solutions to their questions. The details are problematic based on an infinite combination of size, height, materials and loading.

This public comment provides what the DCC thinks is the least prescriptive language that can be inserted into the code regarding bracing. It requires some sort of lateral bracing without quantifying and/or mandating the method(s).

Section R507.1.3 was added to cross-reference back to R322 and the committee action to RB162.

RB201-16

RB202-16

IRC: , 507.3.5, R507, R507.2 (New), R507.2.1 (New), R507.2.1.1 (New), R507.2.3 (New), R507.2.4 (New), R507.2.5 (New), R507.3, R507.3.1, R507.3.2, R507.3.3, R507.3.4.

Proposed Change as Submitted

Proponent : Charles Bajnai, representing Deck Code Coalition and Chesterfield County, VA; and North American Deck and Railing Association (NADRA) (bajnaic@chesterfield.gov)

2015 International Residential Code

SECTION R507 EXTERIOR DECKS

R507.2 Materials Materials used for the construction of decks shall comply with this section.

R507.2.1 Wood materials. All wood materials shall be No.2 grade or better lumber, preservative-treated in accordance with Section R317 or approved, naturally durable lumber, and termite protected where required in accordance with Section R318. Where design in accordance with Section R301 is provided, all wood structural members shall be designed using the wet service factor defined in AWC NDS. All cuts, notches, and drilled holes of preservative treated wood members shall be treated in accordance with Section R317.1.1. All preservative-treated wood products in contact with the ground shall be labeled for such usage.

R507.2.1.1 Engineered wood products. Engineered wood products shall be in accordance with Section R502.

~~**R507.3**~~ **R507.2.2 Plastic composite deck boards, stair treads, guards, or handrails.** Plastic composite exterior deck boards, stair treads, guards and handrails shall comply with the requirements of ASTM D 7032 and the requirements of Section 507.3.

~~**R507.3.1**~~ **R507.2.2.1 Labeling.** Plastic composite deck boards and stair treads, or their packaging, shall bear a label that indicates compliance to ASTM D 7032 and includes the allowable load and maximum allowable span determined in accordance with ASTM D 7032. Plastic or composite handrails and guards, or their packaging, shall bear a label that indicates compliance to ASTM D 7032 and includes the maximum allowable span determined in accordance with ASTM D 7032.

~~**R507.3.2**~~ **R507.2.2.2 Flame spread index.** Plastic composite deck boards, stair treads, guards, and handrails shall exhibit a flame spread index not exceeding 200 when tested in accordance with ASTM E 84 or UL 723 with the test specimen remaining in place during the test.

Exception: Plastic composites determined to be noncombustible.

~~**R507.3.3**~~ **R507.2.2.3 Decay resistance.** Plastic composite deck boards, stair treads, guards and handrails containing wood, cellulosic or other biodegradable materials shall be decay resistant in accordance with ASTM D 7032.

~~**R507.3.4**~~ **R507.2.2.4 Termite resistance.** Where required by Section 318, plastic composite deck boards, stair treads, guards and handrails containing wood, cellulosic or other biodegradable materials shall be termite resistant in accordance with ASTM D 7032.

~~**507.3.5**~~ **R507.2.2.5 Installation of plastic composites.** Plastic composite deck boards, stair treads, guards and handrails shall be installed in accordance with this code and the manufacturer's instructions.

R507.2.3 Fasteners and connectors. Metal fasteners and connectors used for all decks shall be in accordance with Section R317.3 and Table R507.2.3.

TABLE R507.2.3
FASTENER AND CONNECTOR SPECIFICATIONS FOR DECKS[a,b]

ITEM	MATERIAL	MINIMUM FINISH/COATING	ALTERNATE FINISH/COATING [e]
Nails and timber rivets	In accordance with ASTM F1667	Hot-dipped galvanized per ASTM A 153	Stainless steel; silicon bronze, or copper
Bolts [c] Lag screws [d] (including nuts and washers)	In accordance with ASTM A 307 (bolts), ASTM A 563 (nuts), ASTM F 844 (washers)	Hot-dipped galvanized per ASTM A153 Class C (Class D for 3/8" diameter and less) or Mechanically galvanized per ASTM B 695, Class 55 or 410 stainless steel	Stainless steel; silicon bronze, or copper
Metal connectors	Per manufacturer's specification	ASTM A 653 type G185 zinc coated galvanized steel or Post hot-dipped galvanized per ASTM A 123 providing a minimum average coating weight of 2.0 oz./ft^2 (total both sides)	Stainless steel

NOTES

a. Alternate materials, coatings and finishes shall be permitted.

b. Fasteners and connectors exposed to salt water or located within 300 feet of a salt water shoreline shall be stainless steel.

c. Holes for bolts shall be drilled a minimum 1/32" and a maximum 1/16" larger than the bolt.

d. Lag screws ½" and larger shall be predrilled to avoid wood splitting per National Design Specification (NDS) for Wood Construction.

e. Stainless steel driven fasteners shall be in accordance with ASTM F 1667.

R507.2.4 Flashing. Flashing shall be corrosion-resistant metal of minimum nominal 0.019 inch thickness or approved non-metallic material that is compatible with the substrate of the structure and the decking materials.

R507.2.5 Alternate materials. Alternate materials, including glass and metals shall be permitted.

Reason:

WHAT: This code change proposal provides design specifications for deck construction materials frequently found in deck construction.

WHY: The Deck Code Coalition (DCC) realized that the only materials specifically described in R507 was for plastic composite materials. They thought it was important to include design specifications for wood, fasteners and other materials.

Footnote b reflects the requirement from FEMA Technical bulletin 8.

Alternative materials, including glass and metals, shall be permitted.

The Deck Code Coalition (DCC) is a diverse group of stakeholders, including building officials, industry associations, product manufacturers, design professionals, and academia who have worked since the 2012 IRC code development cycle in an effort to consolidate and improve deck construction methods from across the country.

Our goals are threefold:

1. Consolidate existing code scattered throughout the IRC under the newly expanded Section R507. Being able to easily locate all deck related code provisions in one section equally serves the builder, code official and design professional to a safer, code-conforming deck.
2. Create realistic, fact-based, prescriptive solutions to fill critical gaps in the current deck code. Many parts of existing deck code rely on subjective interpretations by the reader leading to an inconsistent approach to meeting minimum code.
3. Maintain and promote a safer deck structure without unduly burdening the builder. In all cases the DCC want to offer safe minimum requirements without stifling the creativity of the design professional or builder.

Cost Impact: Will not increase the cost of construction
There is no cost impact. These materials are already required by other sections of the IRC for connecting members outdoors.

RB202-16 :
R507.2 (NEW)-
BAJNAI10506

Public Hearing Results

Committee Action: **Approved as Modified**

Modification:

TABLE R507.2.3
FASTENER AND CONNECTOR SPECIFICATIONS FOR DECKS [a,b]

NOTES
a. ~~Alternate~~ Equivalent materials, coatings and finishes shall be permitted.
b. Fasteners and connectors exposed to salt water or located within 300 feet of a salt water shoreline shall be stainless steel.
c. Holes for bolts shall be drilled a minimum 1/32" and a maximum 1/16" larger than the bolt.
d. Lag screws ½" and larger shall be predrilled to avoid wood splitting per National Design Specification (NDS) for Wood Construction.
e. Stainless steel driven fasteners shall be in accordance with ASTM F 1667.

Committee Reason: The committee approved this proposal based on the proponents published reason statement. This proposal allows options for materials and provides clear prescriptive requirements. The modification changes alternate to equivalent which is the more appropriate terminology.

Assembly Action: **None**

Individual Consideration Agenda

Public Comment 1:

Proponent : Charles Bajnai, representing Deck Code Coalition and Chesterfield County, VA; and North American Deck and Railing Association (NADRA) (bajnaic@chesterfield.gov) requests Approve as Modified by this Public Comment.

Further Modify as Follows:

2015 International Residential Code

R507.2.1 Wood materials. All wood materials shall be No.2 grade or better lumber, preservative-treated in accordance with Section R317 or approved, naturally durable lumber, and termite protected where required in accordance with Section R318. Where design in accordance with Section R301 is provided, all wood structural members shall be designed using the wet service factor defined in AWC NDS. All cuts, notches, and drilled holes of preservative treated wood members shall be treated

in accordance with Section R317.1.1. All preservative-treated wood products ~~in contact with the ground~~ used for structural framing shall be ~~labeled~~ suitable for ~~such usage~~ ground contact use.

Commenter's Reason:

This public comment is introduced to make the code language consistent with the intent of the changes to the updated 2016 AWPA reference standard.

Preservative-treated lumber bearing ground contact labels is currently available at most building material suppliers.

Cost: no additional cost impact.

RB202-16

RB209-16

IRC: R507, R507.4.

Proposed Change as Submitted

Proponent : Charles Bajnai, representing Deck Code Coalition and Chesterfield County, VA; and North American Deck and Railing Association (NADRA) (bajnaic@chesterfield.gov)

2015 International Residential Code

SECTION R507 EXTERIOR DECKS

~~**R507.4**~~ **R507.7 Decking.** Maximum allowable spacing for joists supporting decking shall be in accordance with Table ~~R507.4~~ R507.7. Wood decking shall be attached to each supporting member with not less than (2) 8d threaded nails or (2) No. 8 wood screws. Other types of decking or fastener systems shall be permitted in accordance with manufacturer's installation requirements.

TABLE ~~R507.4~~ R507.7
MAXIMUM JOIST SPACING FOR DECKING

DECKING MATERIAL TYPE AND NOMINAL SIZE	MAXIMUM ON-CENTER JOIST SPACING	
	Decking perpendicular to joist	Decking diagonal to joist[a]
$1^1/_4$ -inch-thick wood	16 inches	12 inches
2-inch-thick wood	24 inches	16 inches
Plastic composite	In accordance with Section R507.3	In accordance with Section R507.3

For SI: 1 inch = 25.4 mm, 1 foot = 304.8 mm, 1 degree = 0.01745 rad.

a. Maximum angle of 45 degrees from perpendicular for wood deck boards

---

Reason:

WHAT: This code change modifies the decking text to permit custom decking materials and custom fasteners.

WHY: The Deck Code Coalition (DCC) thought it was imperative to permit all of the new decking materials being developed over the past few years. Also the market has seen many new fasteners and fastening systems being developed.

The Deck Code Coalition (DCC) is a diverse group of stakeholders, including building officials, industry associations, product manufacturers, design professionals, and academia who have worked since the 2012 IRC code development cycle in an effort to consolidate and improve deck construction methods from across the country.

Our goals are threefold:

1. Consolidate existing code scattered throughout the IRC under the newly expanded Section R507. Being able to easily locate all deck related code provisions in one section equally serves the builder, code official and design professional to a safer, code-conforming deck.
2. Create realistic, fact-based, prescriptive solutions to fill critical gaps in the current deck code. Many parts of existing deck code rely on subjective interpretations by the reader leading to an inconsistent approach to meeting minimum code.
3. Maintain and promote a safer deck structure without unduly burdening the builder. In all cases the DCC want to offer safe minimum requirements without stifling the creativity of the design professional or builder.

Cost Impact: Will not increase the cost of construction
There is no cost impact. It may even save a bit by allowing proprietary fastening systems.

RB209-16 : R507.4-BAJNAI11690

Public Hearing Results

Committee Action: **Approved as Submitted**

Committee Reason: The committee felt this is a good update to this section as it allows alternative decking material and fastener systems.

Assembly Action: **None**

Individual Consideration Agenda

Public Comment 1:

Proponent : Paul Coats, PE CBO (pcoats@awc.org) requests Approve as Modified by this Public Comment.

Modify as Follows:

2015 International Residential Code

R507.7 Decking. Maximum allowable spacing for joists supporting decking shall be in accordance with Table R507.7. Wood decking shall be attached to each supporting member with not less than (2) 8d threaded nails or (2) No. 8 wood screws. Other ~~types of~~ *approved* decking or fastener systems shall be ~~permitted~~ installed in accordance with manufacturer's installation requirements.

Commenter's Reason: The phrase "shall be permitted" is overly broad in this instance because there are no specific performance requirements for the alternative decking or fastener system. The proposed revisions add "approved" to clarify that the alternative decking or fastener system is subject to approval by the building official as are all alternative systems. Revisions also clarify that installation shall be per manufacturer's installation instructions.

RB209-16

RB211-16

IRC: R507.8 (New), R507.8.1 (New), R507.8.1.1 (New), R507.8.1.1(1) (New), R507.8.1.1(2) (New), R507.8.1.1(3) (New), R507.8.1.1(4) (New), R507.8.1.1(5) (New), R507.8.1.1(6) (New), R507.8.1.2 (New).

Proposed Change as Submitted

Proponent : Charles Bajnai, representing Deck Code Coalition and Chesterfield County, VA; and North American Deck and Railing Association (NADRA) (bajnaic@chesterfield.gov)

2015 International Residential Code

R507.8 Guards. Guards shall comply with Section R312.1

R507.8.1 Guard systems. Guards shall be constructed to meet the requirements of Table R301.5.

R507.8.1.1 Guard post attachement. Guard post attachment shall be permitted to be constructed in accordance with Figure R507.8.1.1 (1) through R507.8.1.1(5) or in accordance with approved manufacturer's installation instructions.

R507.8.1.2 Other guard systems. Other approved guard systems installed in accordance with manufacturer's instructions shall be permitted.

FIGURE R507.8.1.1(1)
EXTERIOR MOUNTED GUARD POSTS

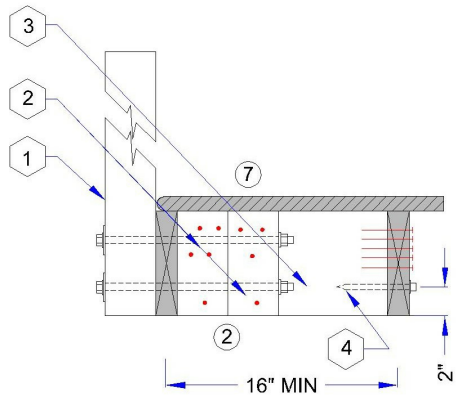

RIM AND SIDE DETAIL

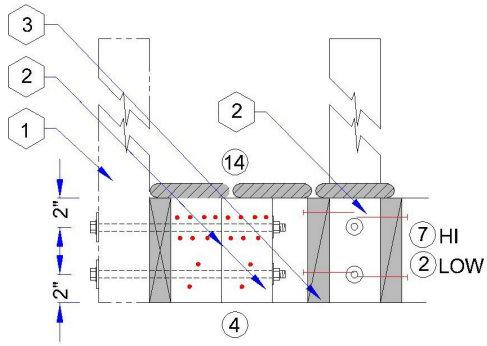

CORNER FACING SIDE JOIST

1 MINIMUM 4x4 WOOD GUARD POST WITH NO NOTCHES, ATTACHED TO JOIST OR RI WITH (2) $\frac{1}{2}$" DIAMETER THROUGH BOLTS AND 2" DIA. FENDER WASHERS, OR EQUIVALENT MANUFACTURED POST AND ATTACHMENT HARDWARE

2 4x4 BLOCKING, MINIMUM

3 2x VERTICAL BLOCKING, FULL DEPTH

4 (1) 3/8" DIA LAG SCREW AND (5) 16d NAILS (OR 20d NAILS THRU 2-PLY BEAM INTO JOIST), MINIMUI 2-1/2" EMBEDMENT FOR LA SCREW

X X INDICATES THE NUMBER OF 16d NAILS

FOOTNOTES:

a. DETAILS ARE BASED ON 36" TALL GUARD,
b. MINIMUM 2X8 DECK FRAMING,
c. JOISTS @ 16" O.C. MAX SPACING
d. DECKING 1-1/2" MAX THICKNESS
e. ALL WOOD HEM-FIR (SG=0.43) OR GREATER, EXCEPT DECKING
f. ALL NAILS ARE COMMON NAILS,
g. SCREWS OF EQUAL OR GREATE CAPACITY MAY REPLACE NAILS,
h. LAG SCREWS ON FACE OF RIM BOARD, BEAM OR RIM JOIST MAY BE COUNTERSUNK SUCH THAT HEADS MAY BE FLUSH WITH WOOD MEMBER.
i. PRE-DRILL LAG SCREWS PER NDS.

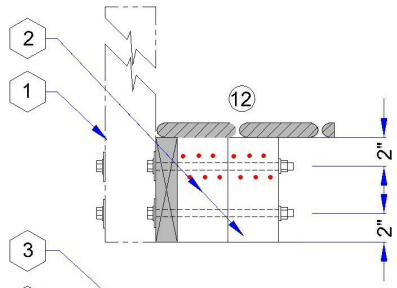

RIM DETAIL

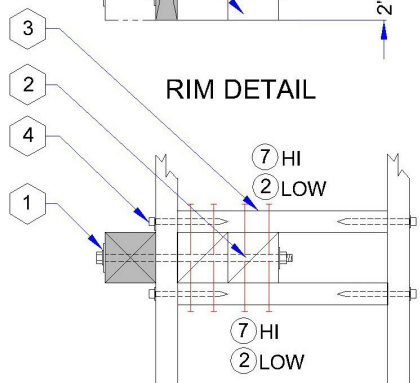

SIDE WITH WOOD POST

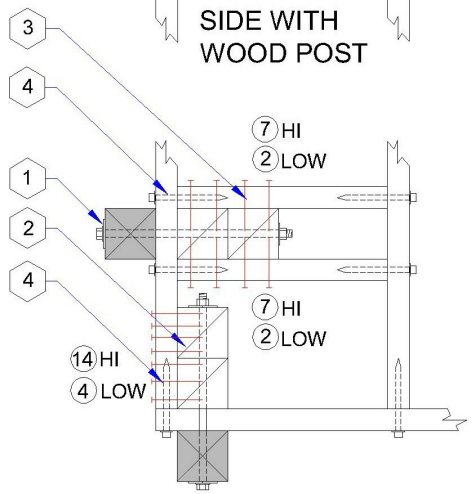

CORNER

NOTE:
GUARD POST CAN BE MOUNTED ANYWHERE BETWEEN JOISTS

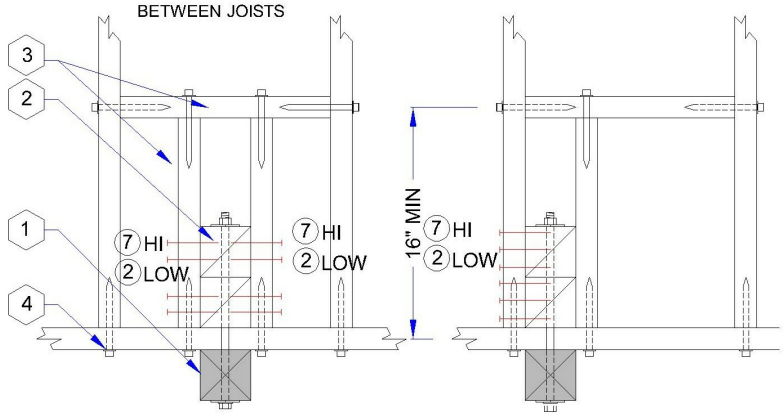

RIM WITH POST BETWEEN JOISTS (BEAM - SIMILAR)

RIM WITH POST AT JOIS (BEAM - SIMILAR)

FIGURE R507.8.1.1(2)
INTERIOR MOUNTED GUARD POSTS

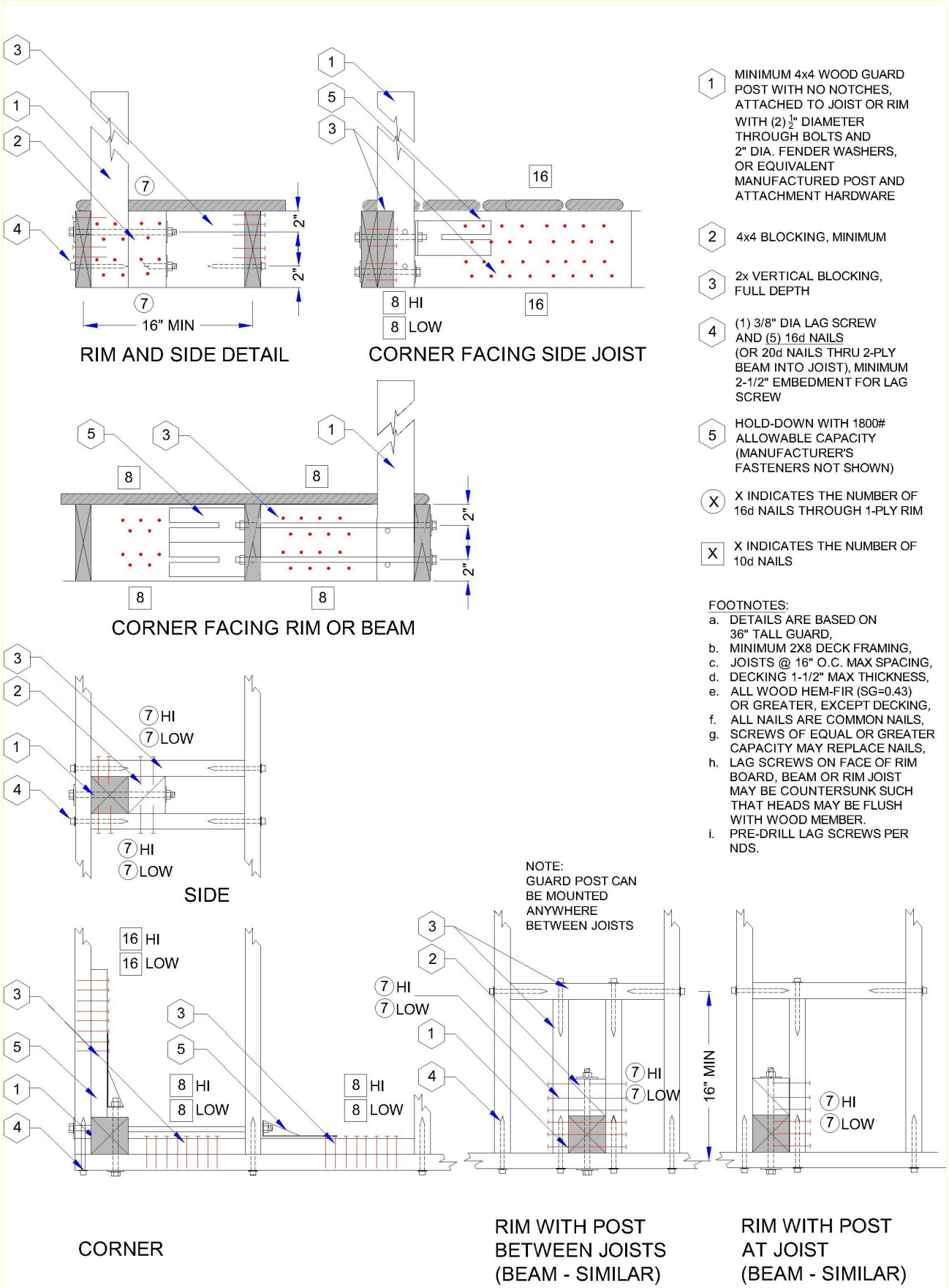

1 MINIMUM 4x4 WOOD GUARD POST WITH NO NOTCHES, ATTACHED TO JOIST OR RIM WITH (2) $\frac{1}{2}$" DIAMETER THROUGH BOLTS AND 2" DIA. FENDER WASHERS, OR EQUIVALENT MANUFACTURED POST AND ATTACHMENT HARDWARE

2 4x4 BLOCKING, MINIMUM

3 2x VERTICAL BLOCKING, FULL DEPTH

4 (1) 3/8" DIA LAG SCREW AND (5) 16d NAILS (OR 20d NAILS THRU 2-PLY BEAM INTO JOIST), MINIMUM 2-1/2" EMBEDMENT FOR LAG SCREW

5 HOLD-DOWN WITH 1800# ALLOWABLE CAPACITY (MANUFACTURER'S FASTENERS NOT SHOWN)

(X) X INDICATES THE NUMBER OF 16d NAILS THROUGH 1-PLY RIM

[X] X INDICATES THE NUMBER OF 10d NAILS

FOOTNOTES:

a. DETAILS ARE BASED ON 36" TALL GUARD,
b. MINIMUM 2X8 DECK FRAMING,
c. JOISTS @ 16" O.C. MAX SPACING,
d. DECKING 1-1/2" MAX THICKNESS,
e. ALL WOOD HEM-FIR (SG=0.43) OR GREATER, EXCEPT DECKING,
f. ALL NAILS ARE COMMON NAILS,
g. SCREWS OF EQUAL OR GREATER CAPACITY MAY REPLACE NAILS,
h. LAG SCREWS ON FACE OF RIM BOARD, BEAM OR RIM JOIST MAY BE COUNTERSUNK SUCH THAT HEADS MAY BE FLUSH WITH WOOD MEMBER.
i. PRE-DRILL LAG SCREWS PER NDS.

FIGURE R507.8.1.1(3)
EXTERIOR MOUNTED GUARD POSTS WITH HARDWARE

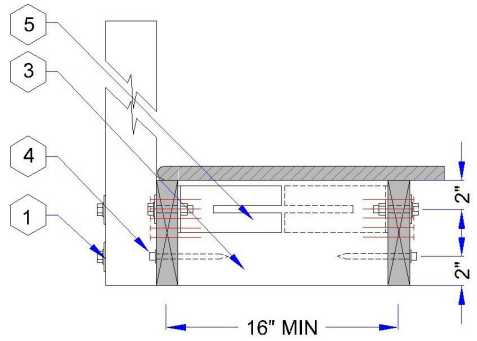

RIM AND SIDE DETAIL

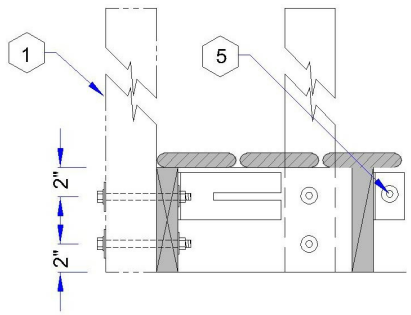

CORNER FACING SIDE JOIST

1 MINIMUM 4x4 WOOD GUARD POST WITH NO NOTCHES, ATTACHED TO JOIST OR RIM WITH (2) $\frac{1}{2}$" DIAMETER THROUGH BOLTS AND 2" DIA. FENDER WASHERS, OR EQUIVALENT MANUFACTURED POST AND ATTACHMENT HARDWARE

3 2x VERTICAL BLOCKING, FULL DEPTH

4 (1) 3/8" DIA LAG SCREW AND (5) 16d NAILS (OR 20d NAILS THRU 2-PLY BEAM INTO JOIST), MINIMUM 2-1/2" EMBEDMENT FOR LAG SCREW

5 HOLD-DOWN WITH 1800# ALLOWABLE CAPACITY (FASTENERS NOT SHOWN)

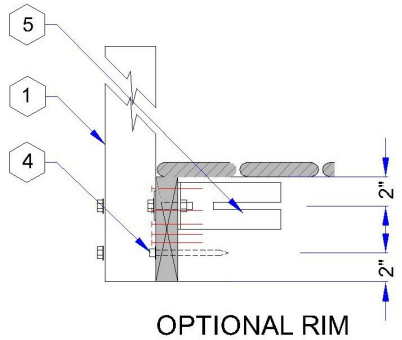

OPTIONAL RIM DETAIL

FOOTNOTES:

a. DETAILS ARE BASED ON 36" TALL GUARD,
b. MINIMUM 2X8 DECK FRAMING,
c. JOISTS @ 16" O.C. MAX SPACIN
d. DECKING 1-1/2" MAX THICKNES
e. ALL WOOD HEM-FIR (SG=0.43) OR GREATER, EXCEPT DECKIN
f. ALL NAILS ARE COMMON NAILS
g. SCREWS OF EQUAL OR GREAT CAPACITY MAY REPLACE NAILS
h. LAG SCREWS ON FACE OF RIM BOARD, BEAM OR RIM JOIST MAY BE COUNTERSUNK SUCH THAT HEADS MAY BE FLUSH WITH WOOD MEMBER.
i. PRE-DRILL LAG SCREWS PER NDS.

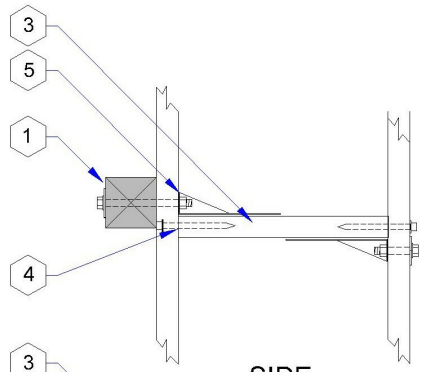

SIDE

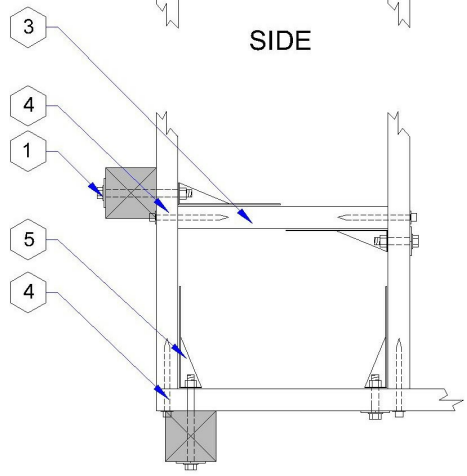

CORNER

NOTE:
GUARD POST CAN BE MOUNTED ANYWHERE BETWEEN JOISTS

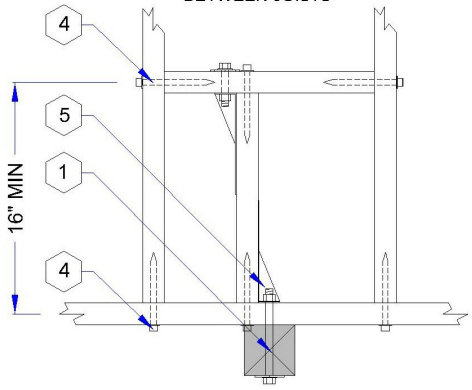

RIM WITH POST BETWEEN JOISTS (BEAM - SIMILAR)

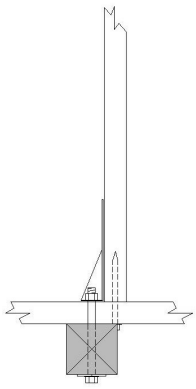

RIM WITH POST AT JOIST (BEAM - SIMILAR)

FIGURE R507.8.1.1(4)
INTERIOR MOUNTED GUARD POSTS WITH HARDWARE

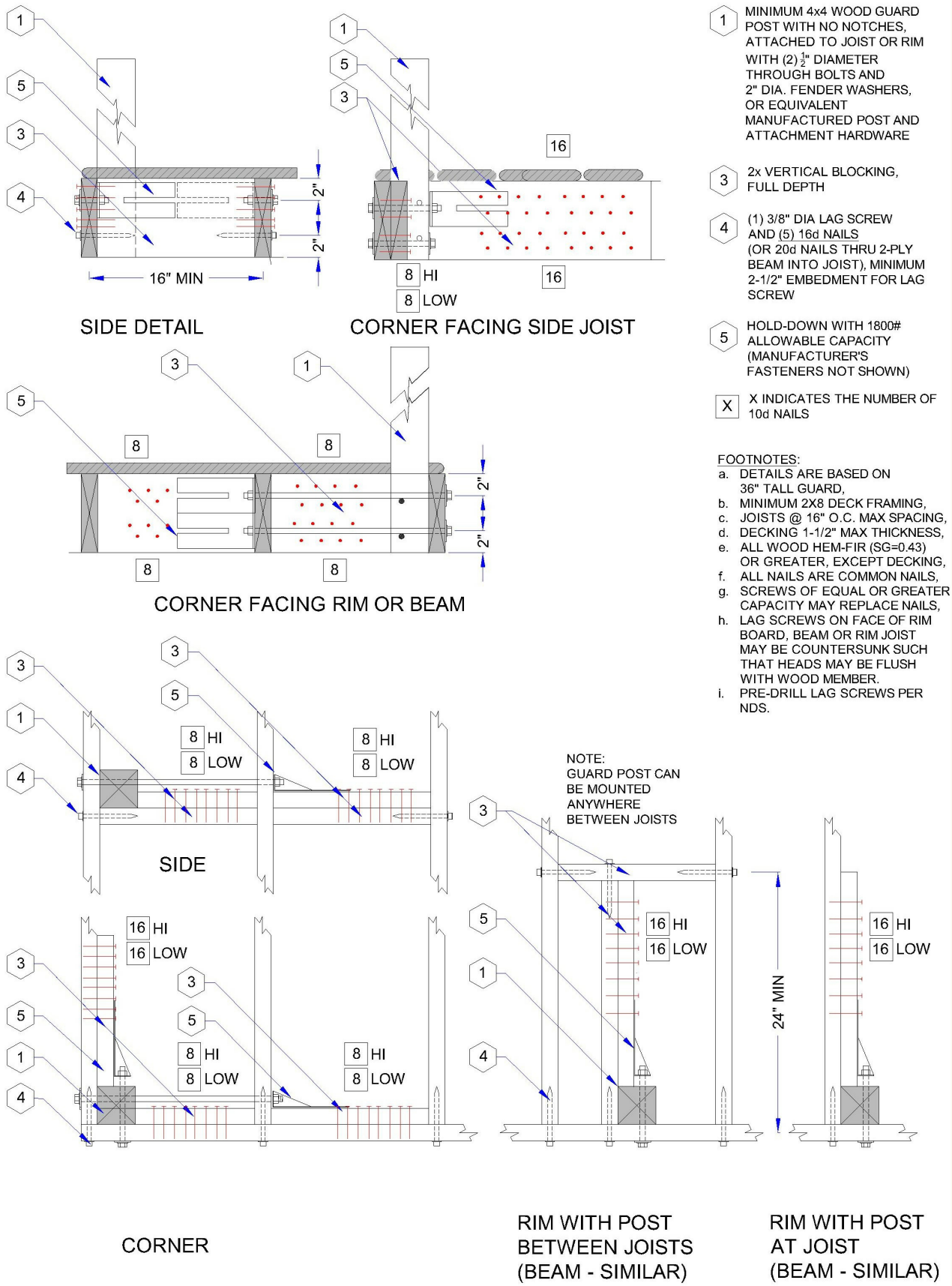

FIGURE R507.8.1.1(5)
TOP MOUNTED GUARD POSTS ON RIM

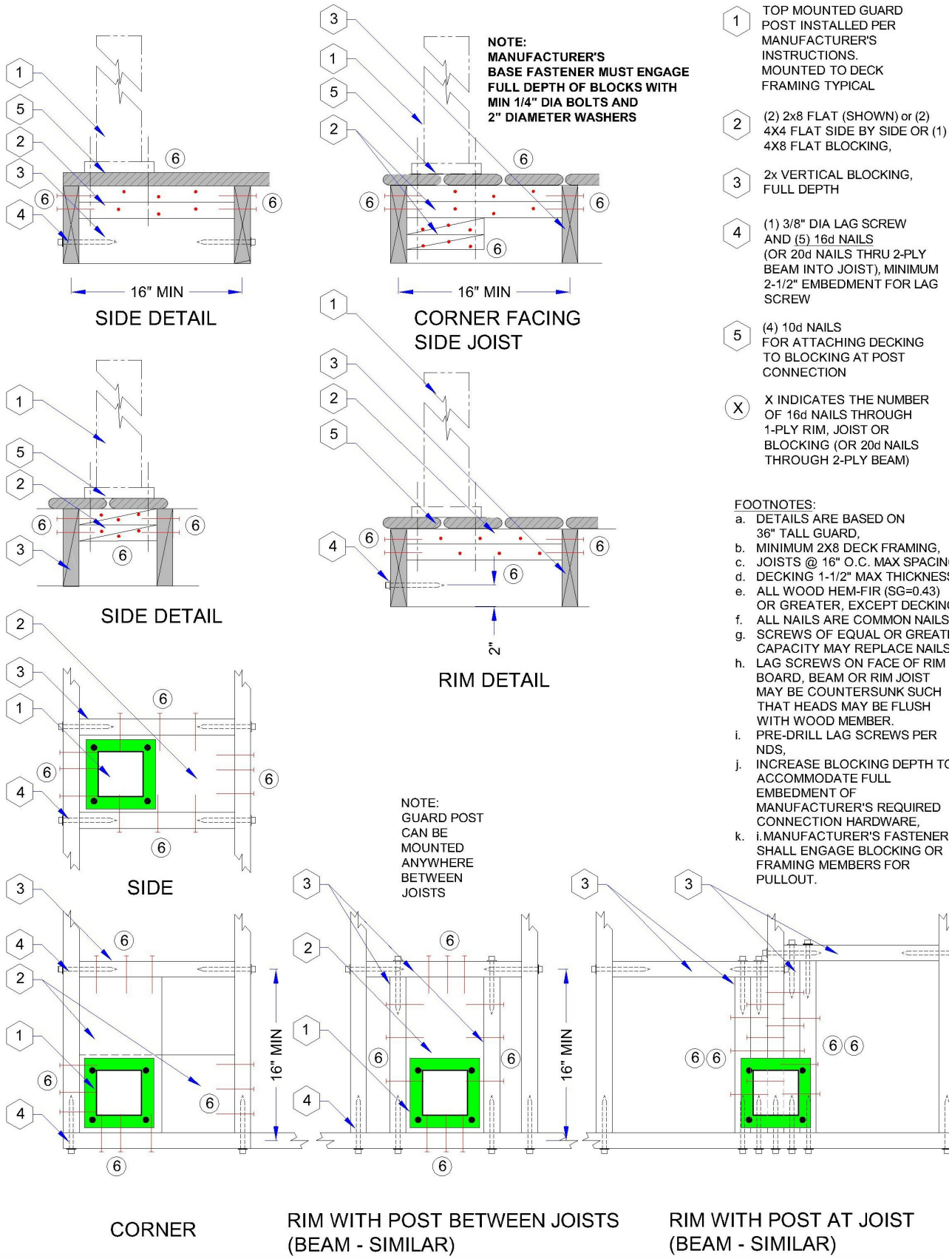

FIGURE R507.8.1.1(6)
TOP MOUNTED GUARD POSTS OFF RIM

Reason:

WHAT: This code change provides prescriptive details how guards can be attached to the deck and meet the intent of live load provisions as allowed by:

- **ICC ES AC273** Acceptance Criteria for Handrails and Guards,
- **ICC ES AC174** Acceptance Criteria for Deck Board Span Rating and Guardrail Systems, and
- **ASTM D7032** Standard Specification for Establishing Performance Ratings for Wood-Plastic Composite Deck Boards and Guardrail Systems.

Five new drawings are presented:

1. Wood post with wood blocking connections - exterior of the rim,
2. Wood post with wood blocking connections - interior of the rim,
3. Wood post with mechanical connectors - exterior of the rim,
4. Wood post with mechanical connectors - interior of the rim,
5. Proprietary post – top mounted

Each of the details provides solutions for posts mounted on the *side* of the deck, the *corner* of the deck and the *front* of the deck.

WHY: The Deck Code Coalition (DCC) recognized that one of the biggest oversights on deck safety dealt with guard post attachment.

- NADRA members and folks in the composite lumber industry helped provide feedback on our proposals. In particular, they wanted flexibility in providing custom designs and innovative new products.
- To accomplish this we had to strengthen the deck structure. It did not make sense to have the world's strongest deck guard system installed on a poorly constructed deck. We created these details so that anyone's system should work without concern that the deck structure is the weak link.
- We created our prescriptive designs based on *all-wood options* and *mechanical hold-down options*. Proprietary solutions are available, so the committee did not want to reproduce them in the code. The engineering analysis is available as an attachment to this proposal.

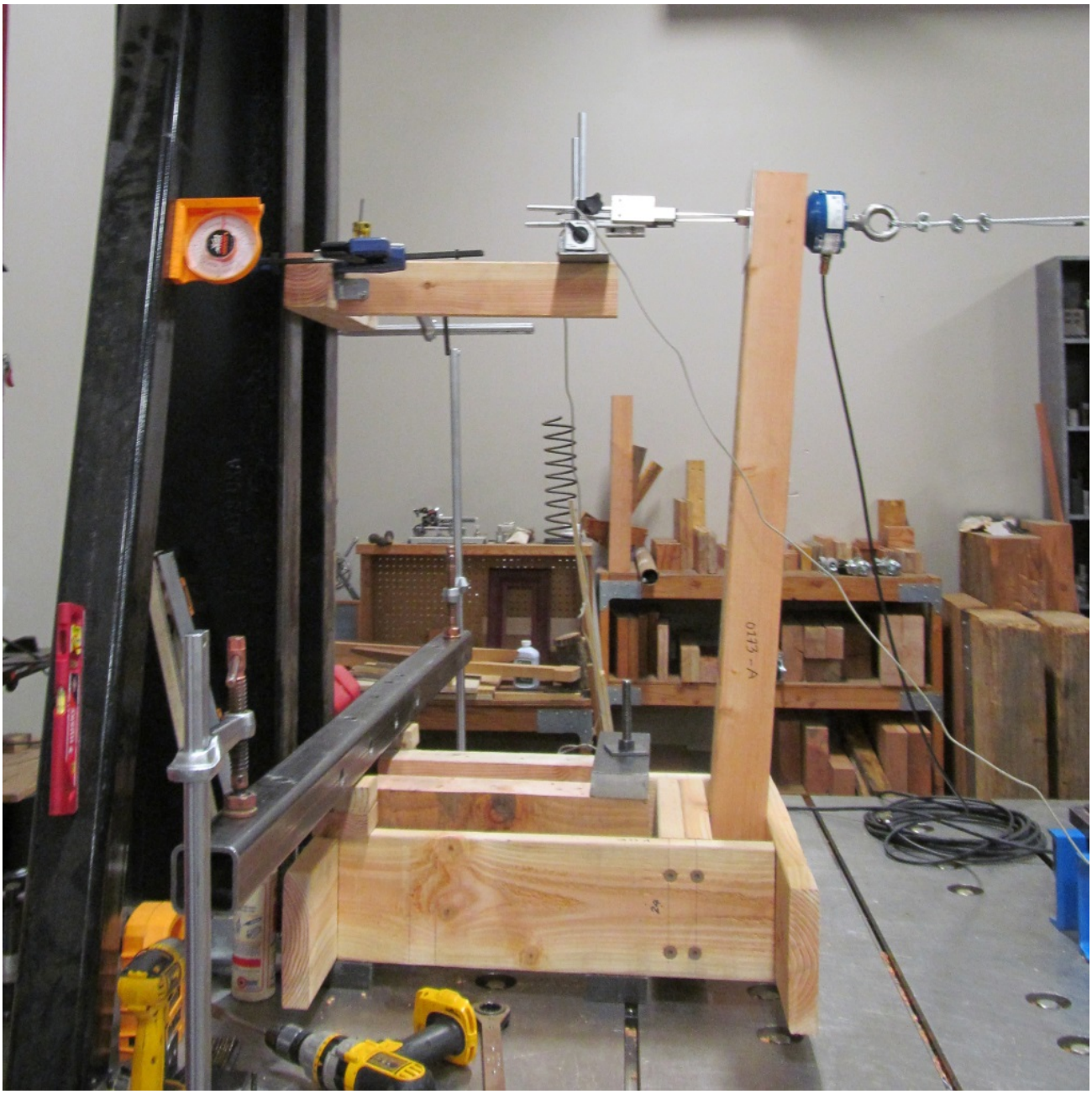

The Deck Code Coalition (DCC) is a diverse group of stakeholders, including building officials, industry associations, product manufacturers, design professionals, and academia who have worked since the 2012 IRC code development cycle in an effort to consolidate and improve deck construction methods from across the country.

Our goals are threefold:

1. Consolidate existing code scattered throughout the IRC under the newly expanded Section R507. Being able to easily locate all deck related code provisions in one section equally serves the builder, code official and design professional to a safer, code-conforming deck.
2. Create realistic, fact-based, prescriptive solutions to fill critical gaps in the current deck code. Many parts of existing deck code rely on subjective interpretations by the reader leading to an inconsistent approach to meeting minimum code.
3. Maintain and promote a safer deck structure without unduly burdening the builder. In all cases the DCC want to offer safe minimum requirements without stifling the creativity of the design professional or builder.

Cost Impact: Will increase the cost of construction

For those constractors who are meeting the current code, there will be a minimal cost impact - for they are already doing most of this work already.

For those contractors who are not meeting the current code, there will be a cost increase to bring up their construction standards up to code.

- It would be conceivable that this proposal could cost over $200 per deck in both time and materials.
- However, if decks are to conform to the requiremenst of R301.5, an engineered solution should be required on almost every deck built.
- A financial analysis would say this is a good investment: The cost of the engineering analysis, plus the cost of consumer protection will more than offset the cost of time and materials for a code compliant deck.

RB211-16 :
R507.8 (NEW)-
BAJNAI11692

Public Hearing Results

Committee Action: **Disapproved**

Committee Reason: Testimony was provided that the proposed guard details does not meet the design criteria as specified in Table R301.5. The committee felt it could not approve standard detail that do not meet minimum requirements. The committee suggests additional testing to develop acceptable details.

Assembly Motion: **As Submitted**
Online Vote Results: **Failed**
Support: 17.98% (48) Oppose: 82.02% (219)
Assembly Action: **None**

Individual Consideration Agenda

Public Comment 1:

Proponent : Charles Bajnai, representing Deck Code Coalition and Chesterfield County, VA; and North American Deck and Railing Association (NADRA) (bajnaic@chesterfield.gov) requests Approve as Modified by this Public Comment.

Replace Proposal as Follows:

2015 International Residential Code

R507.8 Exterior guard systems. Exterior guards shall comply with Section R312.1 and be constructed to meet the requirements of Table R301.5.

Commenter's Reason:

The Deck Code Coalition has submitted this public comment to set the minimum criteria for deck guards, namely, cross-reference back to R312.1 GUARDS, and the live load table R301.5.

It provides no other specifications or details than what is currently required. It will act as a placeholder for future code changes while following the organizational layout created with the approved RB198-18.

If you think that currently R312.1 and R301.5 provide adequate specifications/details for guards and guard systems, then please support this public comment.

Public Comment 2:

Proponent : Charles Bajnai, representing Deck Code Coalition and Chesterfield County, VA; and North American Deck and Railing Association (NADRA) (bajnaic@chesterfield.gov) requests Approve as Modified by this Public Comment.

Modify as Follows:

2015 International Residential Code

R507.8 ~~Guards~~ Exterior guard systems. ~~Guards~~ Exterior guards shall comply with Section R312.1

and be constructed to meet the requirements of Table R301.5.

R507.8.1 ~~Guard~~ Deck guard systems with posts. ~~Guards~~ Guard post attachment shall be ~~constructed~~ permitted to ~~meet the requirements of Table R301.5~~ be constructed in accordance with Figure R507.8.1(1) through R507.8.1(5) or in accordance with approved manufacturer's installation instructions.

~~**R507.8.1.1 Guard post attachement.** Guard post attachment shall be permitted to be constructed in accordance with Figure R507.8.1.1 (1) through R507.8.1.1(5) or in accordance with approved manufacturer's installation instructions.~~

~~**R507.8.1.2**~~ **R507.8.2 Other deck guard systems.** Other approved deck guard systems installed in accordance with manufacturer's instructions or designed in accordance with accepted engineering principles shall be permitted.

FIGURE ~~R507.8.1.1(1~~ R507.8.1(1)
EXTERIOR MOUNTED GUARD POSTS

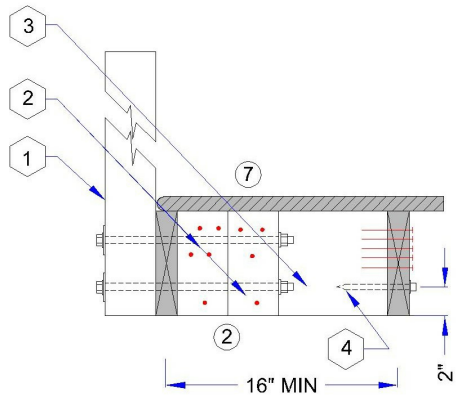

RIM AND SIDE DETAIL

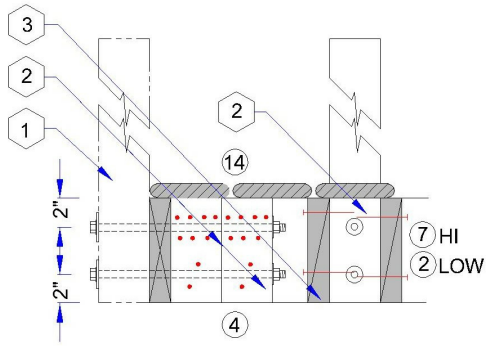

CORNER FACING SIDE JOIST

1 MINIMUM 4x4 WOOD GUARD POST WITH NO NOTCHES, ATTACHED TO JOIST OR RI WITH (2) $\frac{1}{2}$" DIAMETER THROUGH BOLTS AND 2" DIA. FENDER WASHERS, OR EQUIVALENT MANUFACTURED POST AND ATTACHMENT HARDWARE

2 4x4 BLOCKING, MINIMUM

3 2x VERTICAL BLOCKING, FULL DEPTH

4 (1) 3/8" DIA LAG SCREW AND (5) 16d NAILS (OR 20d NAILS THRU 2-PLY BEAM INTO JOIST), MINIMUI 2-1/2" EMBEDMENT FOR LA SCREW

X X INDICATES THE NUMBER OF 16d NAILS

FOOTNOTES:

a. DETAILS ARE BASED ON 36" TALL GUARD,
b. MINIMUM 2X8 DECK FRAMING,
c. JOISTS @ 16" O.C. MAX SPACING
d. DECKING 1-1/2" MAX THICKNESS
e. ALL WOOD HEM-FIR (SG=0.43) OR GREATER, EXCEPT DECKING
f. ALL NAILS ARE COMMON NAILS,
g. SCREWS OF EQUAL OR GREATE CAPACITY MAY REPLACE NAILS,
h. LAG SCREWS ON FACE OF RIM BOARD, BEAM OR RIM JOIST MAY BE COUNTERSUNK SUCH THAT HEADS MAY BE FLUSH WITH WOOD MEMBER.
i. PRE-DRILL LAG SCREWS PER NDS.

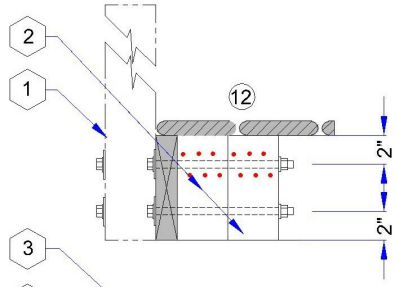

RIM DETAIL

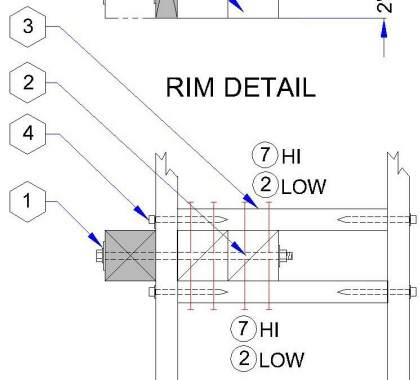

SIDE WITH WOOD POST

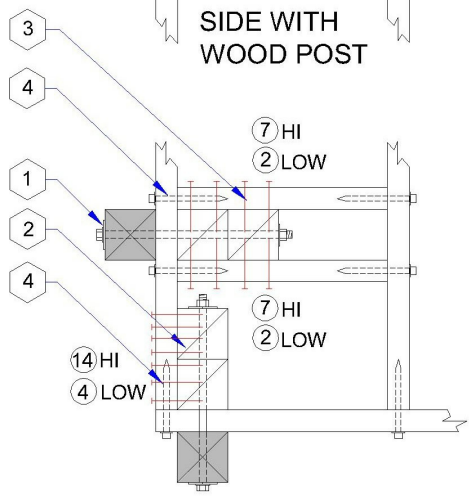

CORNER

NOTE:
GUARD POST CAN BE MOUNTED ANYWHERE BETWEEN JOISTS

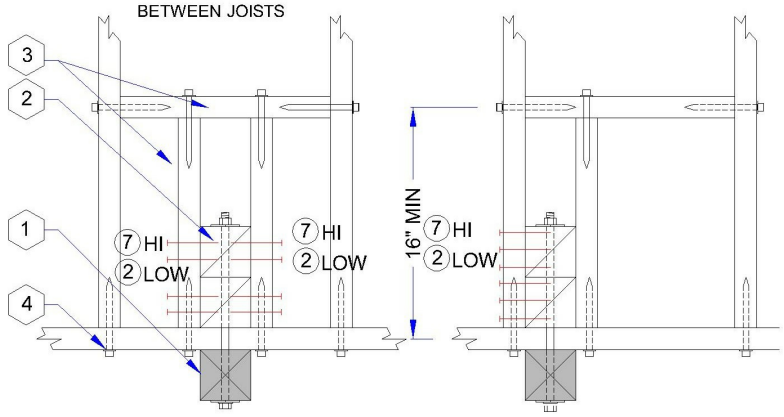

RIM WITH POST BETWEEN JOISTS (BEAM - SIMILAR)

RIM WITH POST AT JOIS (BEAM - SIMILAR)

FIGURE ~~R507.8.1.1(2~~ R507.8.1(2)
INTERIOR MOUNTED GUARD POSTS

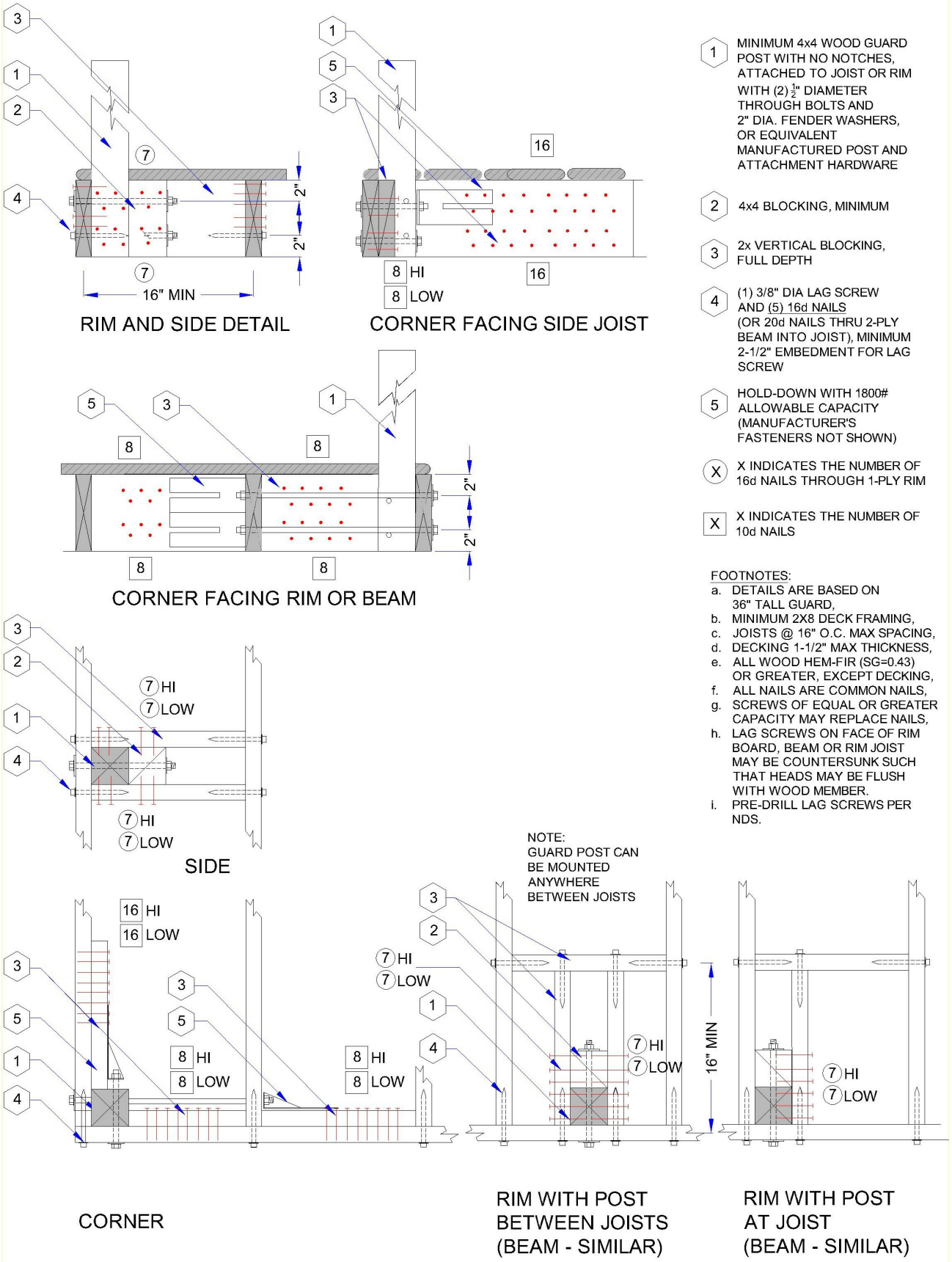

1 MINIMUM 4x4 WOOD GUARD POST WITH NO NOTCHES, ATTACHED TO JOIST OR RIM WITH (2) $\frac{1}{2}$" DIAMETER THROUGH BOLTS AND 2" DIA. FENDER WASHERS, OR EQUIVALENT MANUFACTURED POST AND ATTACHMENT HARDWARE

2 4x4 BLOCKING, MINIMUM

3 2x VERTICAL BLOCKING, FULL DEPTH

4 (1) 3/8" DIA LAG SCREW AND (5) 16d NAILS (OR 20d NAILS THRU 2-PLY BEAM INTO JOIST), MINIMUM 2-1/2" EMBEDMENT FOR LAG SCREW

5 HOLD-DOWN WITH 1800# ALLOWABLE CAPACITY (MANUFACTURER'S FASTENERS NOT SHOWN)

(X) X INDICATES THE NUMBER OF 16d NAILS THROUGH 1-PLY RIM

[X] X INDICATES THE NUMBER OF 10d NAILS

FOOTNOTES:

a. DETAILS ARE BASED ON 36" TALL GUARD,
b. MINIMUM 2X8 DECK FRAMING,
c. JOISTS @ 16" O.C. MAX SPACING,
d. DECKING 1-1/2" MAX THICKNESS,
e. ALL WOOD HEM-FIR (SG=0.43) OR GREATER, EXCEPT DECKING,
f. ALL NAILS ARE COMMON NAILS,
g. SCREWS OF EQUAL OR GREATER CAPACITY MAY REPLACE NAILS,
h. LAG SCREWS ON FACE OF RIM BOARD, BEAM OR RIM JOIST MAY BE COUNTERSUNK SUCH THAT HEADS MAY BE FLUSH WITH WOOD MEMBER.
i. PRE-DRILL LAG SCREWS PER NDS.

FIGURE ~~R507.8.1.1(3~~ R507.8.1(3)
EXTERIOR MOUNTED GUARD POSTS WITH HARDWARE

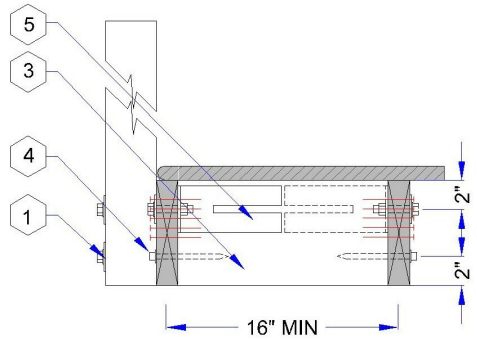

RIM AND SIDE DETAIL

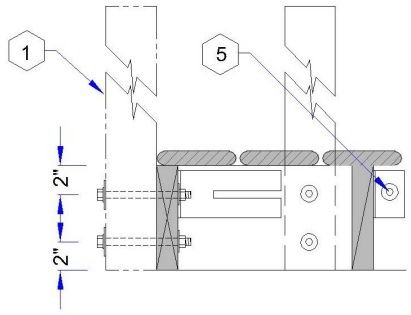

CORNER FACING SIDE JOIST

1 MINIMUM 4x4 WOOD GUARD POST WITH NO NOTCHES, ATTACHED TO JOIST OR RIM WITH (2) $\frac{1}{2}$" DIAMETER THROUGH BOLTS AND 2" DIA. FENDER WASHERS, OR EQUIVALENT MANUFACTURED POST AND ATTACHMENT HARDWARE

3 2x VERTICAL BLOCKING, FULL DEPTH

4 (1) 3/8" DIA LAG SCREW AND (5) 16d NAILS (OR 20d NAILS THRU 2-PLY BEAM INTO JOIST), MINIMUM 2-1/2" EMBEDMENT FOR LAG SCREW

5 HOLD-DOWN WITH 1800# ALLOWABLE CAPACITY (FASTENERS NOT SHOWN)

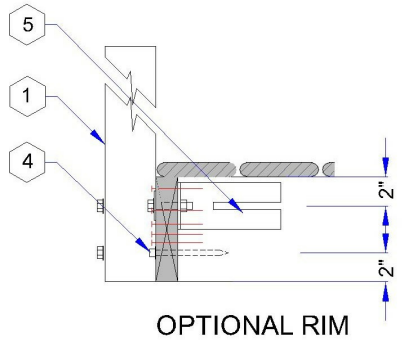

OPTIONAL RIM DETAIL

FOOTNOTES:
a. DETAILS ARE BASED ON 36" TALL GUARD,
b. MINIMUM 2X8 DECK FRAMING,
c. JOISTS @ 16" O.C. MAX SPACIN
d. DECKING 1-1/2" MAX THICKNES
e. ALL WOOD HEM-FIR (SG=0.43) OR GREATER, EXCEPT DECKIN
f. ALL NAILS ARE COMMON NAILS
g. SCREWS OF EQUAL OR GREAT CAPACITY MAY REPLACE NAIL
h. LAG SCREWS ON FACE OF RIM BOARD, BEAM OR RIM JOIST MAY BE COUNTERSUNK SUCH THAT HEADS MAY BE FLUSH WITH WOOD MEMBER.
i. PRE-DRILL LAG SCREWS PER NDS.

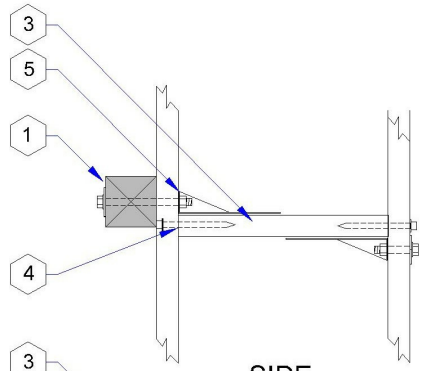

SIDE

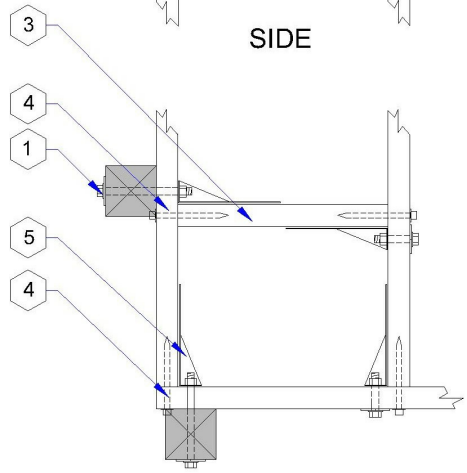

CORNER

NOTE:
GUARD POST CAN BE MOUNTED ANYWHERE BETWEEN JOISTS

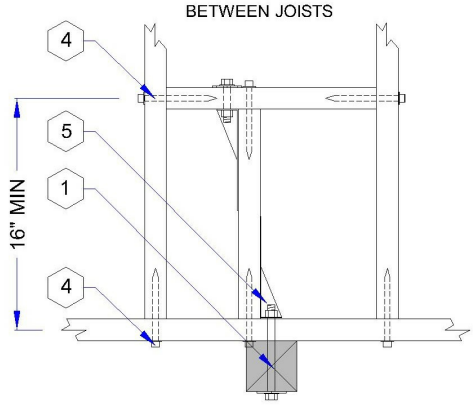

RIM WITH POST BETWEEN JOISTS (BEAM - SIMILAR)

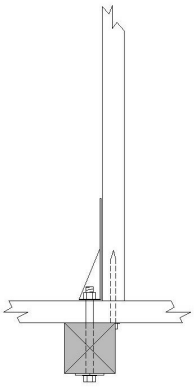

RIM WITH POST AT JOIST (BEAM - SIMILAR)

FIGURE ~~R507.8.1.1(4~~ R507.8.1(4)
INTERIOR MOUNTED GUARD POSTS WITH HARDWARE

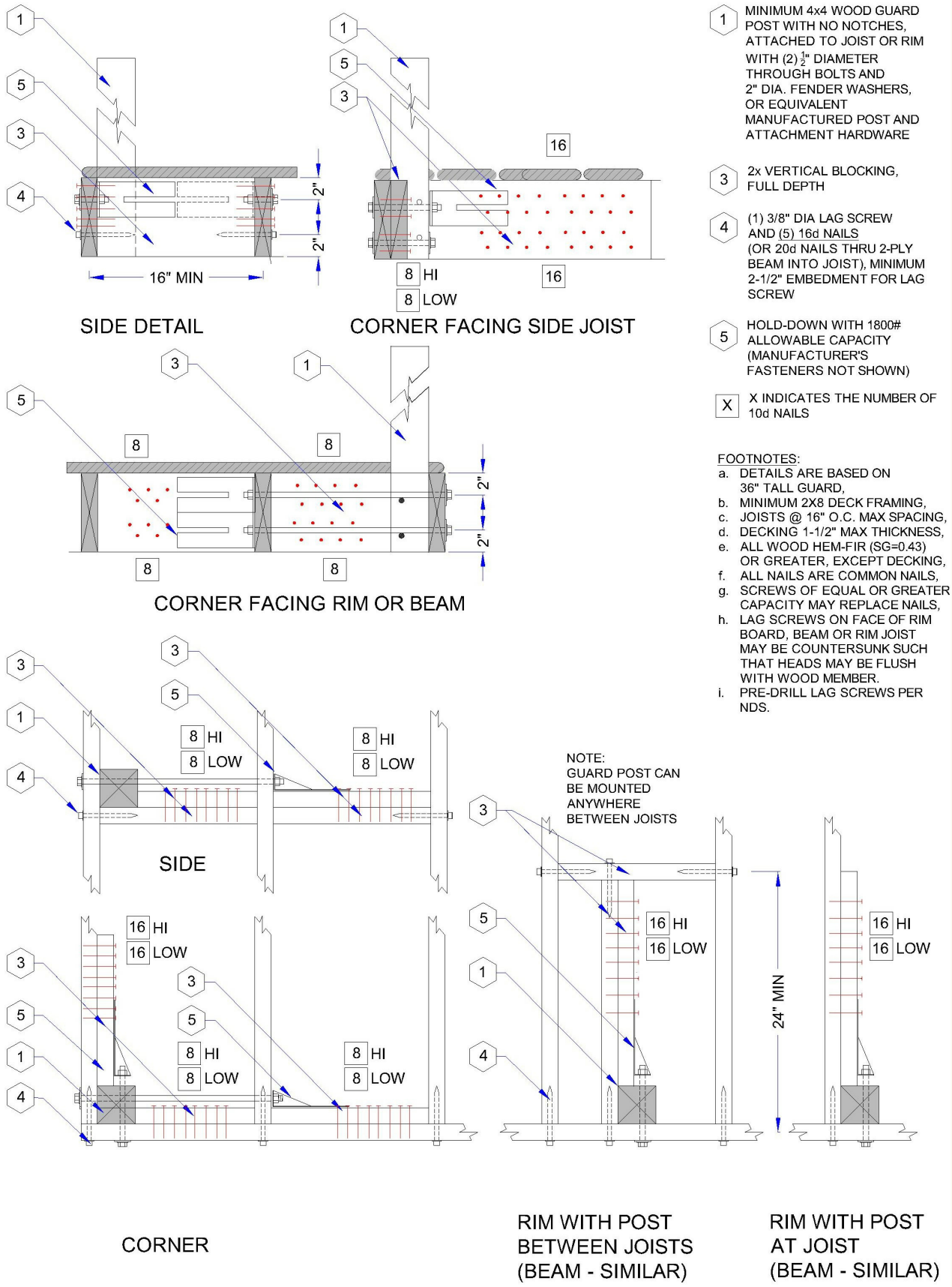

1 MINIMUM 4x4 WOOD GUARD POST WITH NO NOTCHES, ATTACHED TO JOIST OR RIM WITH (2) $\frac{1}{2}$" DIAMETER THROUGH BOLTS AND 2" DIA. FENDER WASHERS, OR EQUIVALENT MANUFACTURED POST AND ATTACHMENT HARDWARE

3 2x VERTICAL BLOCKING, FULL DEPTH

4 (1) 3/8" DIA LAG SCREW AND (5) 16d NAILS (OR 20d NAILS THRU 2-PLY BEAM INTO JOIST), MINIMUM 2-1/2" EMBEDMENT FOR LAG SCREW

5 HOLD-DOWN WITH 1800# ALLOWABLE CAPACITY (MANUFACTURER'S FASTENERS NOT SHOWN)

X X INDICATES THE NUMBER OF 10d NAILS

FOOTNOTES:

a. DETAILS ARE BASED ON 36" TALL GUARD,
b. MINIMUM 2X8 DECK FRAMING,
c. JOISTS @ 16" O.C. MAX SPACING,
d. DECKING 1-1/2" MAX THICKNESS,
e. ALL WOOD HEM-FIR (SG=0.43) OR GREATER, EXCEPT DECKING,
f. ALL NAILS ARE COMMON NAILS,
g. SCREWS OF EQUAL OR GREATER CAPACITY MAY REPLACE NAILS,
h. LAG SCREWS ON FACE OF RIM BOARD, BEAM OR RIM JOIST MAY BE COUNTERSUNK SUCH THAT HEADS MAY BE FLUSH WITH WOOD MEMBER.
i. PRE-DRILL LAG SCREWS PER NDS.

FIGURE ~~R507.8.1.1(5~~ R507.8.1(5)
TOP MOUNTED GUARD POSTS ON RIM

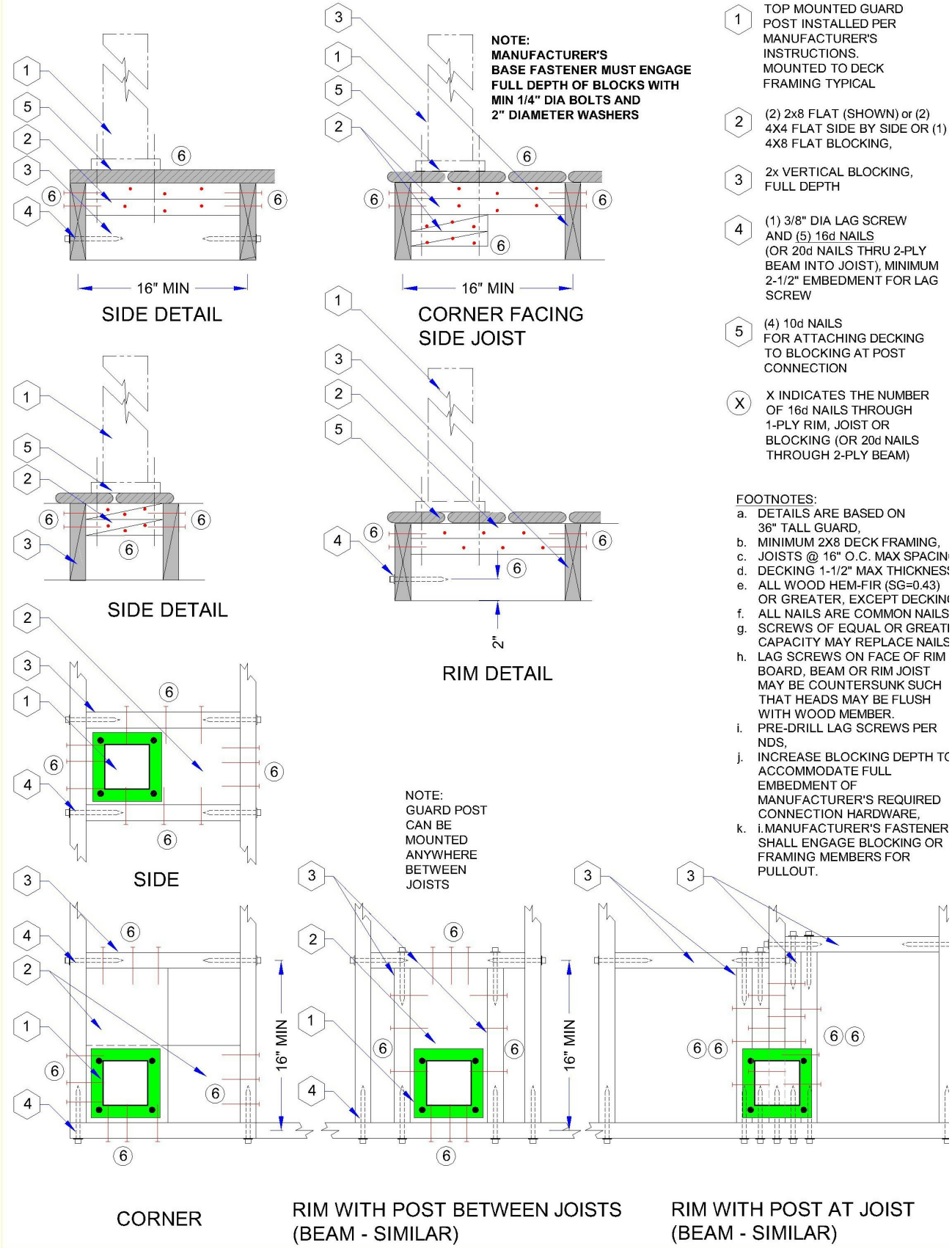

1 TOP MOUNTED GUARD POST INSTALLED PER MANUFACTURER'S INSTRUCTIONS. MOUNTED TO DECK FRAMING TYPICAL

2 (2) 2x8 FLAT (SHOWN) or (2) 4X4 FLAT SIDE BY SIDE OR (1) 4X8 FLAT BLOCKING,

3 2x VERTICAL BLOCKING, FULL DEPTH

4 (1) 3/8" DIA LAG SCREW AND (5) 16d NAILS (OR 20d NAILS THRU 2-PLY BEAM INTO JOIST), MINIMUM 2-1/2" EMBEDMENT FOR LAG SCREW

5 (4) 10d NAILS FOR ATTACHING DECKING TO BLOCKING AT POST CONNECTION

X X INDICATES THE NUMBER OF 16d NAILS THROUGH 1-PLY RIM, JOIST OR BLOCKING (OR 20d NAILS THROUGH 2-PLY BEAM)

FOOTNOTES:

a. DETAILS ARE BASED ON 36" TALL GUARD,
b. MINIMUM 2X8 DECK FRAMING,
c. JOISTS @ 16" O.C. MAX SPACIN
d. DECKING 1-1/2" MAX THICKNES
e. ALL WOOD HEM-FIR (SG=0.43) OR GREATER, EXCEPT DECKIN
f. ALL NAILS ARE COMMON NAILS
g. SCREWS OF EQUAL OR GREATI CAPACITY MAY REPLACE NAILS
h. LAG SCREWS ON FACE OF RIM BOARD, BEAM OR RIM JOIST MAY BE COUNTERSUNK SUCH THAT HEADS MAY BE FLUSH WITH WOOD MEMBER.
i. PRE-DRILL LAG SCREWS PER NDS,
j. INCREASE BLOCKING DEPTH TO ACCOMMODATE FULL EMBEDMENT OF MANUFACTURER'S REQUIRED CONNECTION HARDWARE,
k. i.MANUFACTURER'S FASTENER SHALL ENGAGE BLOCKING OR FRAMING MEMBERS FOR PULLOUT.

~~**R507.8.1.1(6)**~~
~~**TOP MOUNTED GUARD POSTS OFF RIM**~~

Commenter's Reason:

This is the Deck Code Coalition's middle-ground proposal. It modifies the text without changing the original details.

The details submitted satisfy the loading required in the acceptance criteria ICC –ES AC273 and AC174, namely 200# in the outward and the downward directions. The proponents argued that the details complied with the intent of the acceptance criteria and met the definition of a guard, namely to prevent people from falling from an elevated surface. The committee and the opposition argued that the details did not meet the loading in ASCE-7, which they do not. The details were designed for 200# outward and downward, and a minimum of 50# inward and upward.

There was never a figure (6) so we deleted the title.

If you believe the acceptance criteria correctly interprets the risks involved with guard failures, namely, that people can get severely injured when they fall outward or downward, then please support this public comment..

Public Comment 3:

Proponent : Charles Bajnai, representing Deck Code Coalition and Chesterfield County, VA; and North American Deck and Railing Association (NADRA) (bajnaic@chesterfield.gov) requests Approve as Modified by this Public Comment.

Modify as Follows:

2015 International Residential Code

R507.8 ~~Guards~~ Exterior guard systems. ~~Guards~~ Exterior guards shall comply with Section R312.1 and be constructed to meet the requirements of Table R301.5.

R507.8.1 ~~Guard~~ Deck guards systems with posts. ~~Guards~~ Guard post attachment shall be ~~constructed~~ permitted to ~~meet the requirements of Table R301.5~~ be constructed in accordance with Figure R507.8.1(1) through R507.8.1(5) or in accordance with approved manufacturer's installation instructions.

~~**R507.8.1.1 Guard post attachement.** Guard post attachment shall be permitted to be constructed in accordance with Figure R507.8.1.1 (1) through R507.8.1.1(5) or in accordance with approved manufacturer's installation instructions.~~

R507.8.1.2 Other deck guard systems. Other approved deck guard systems installed in accordance with manufacturer's instructions or designed in accordance with accepted engineering principles shall be permitted.

FIGURE ~~R507.8.1.1(1~~ R507.8.1(1)
EXTERIOR MOUNTED GUARD POSTS

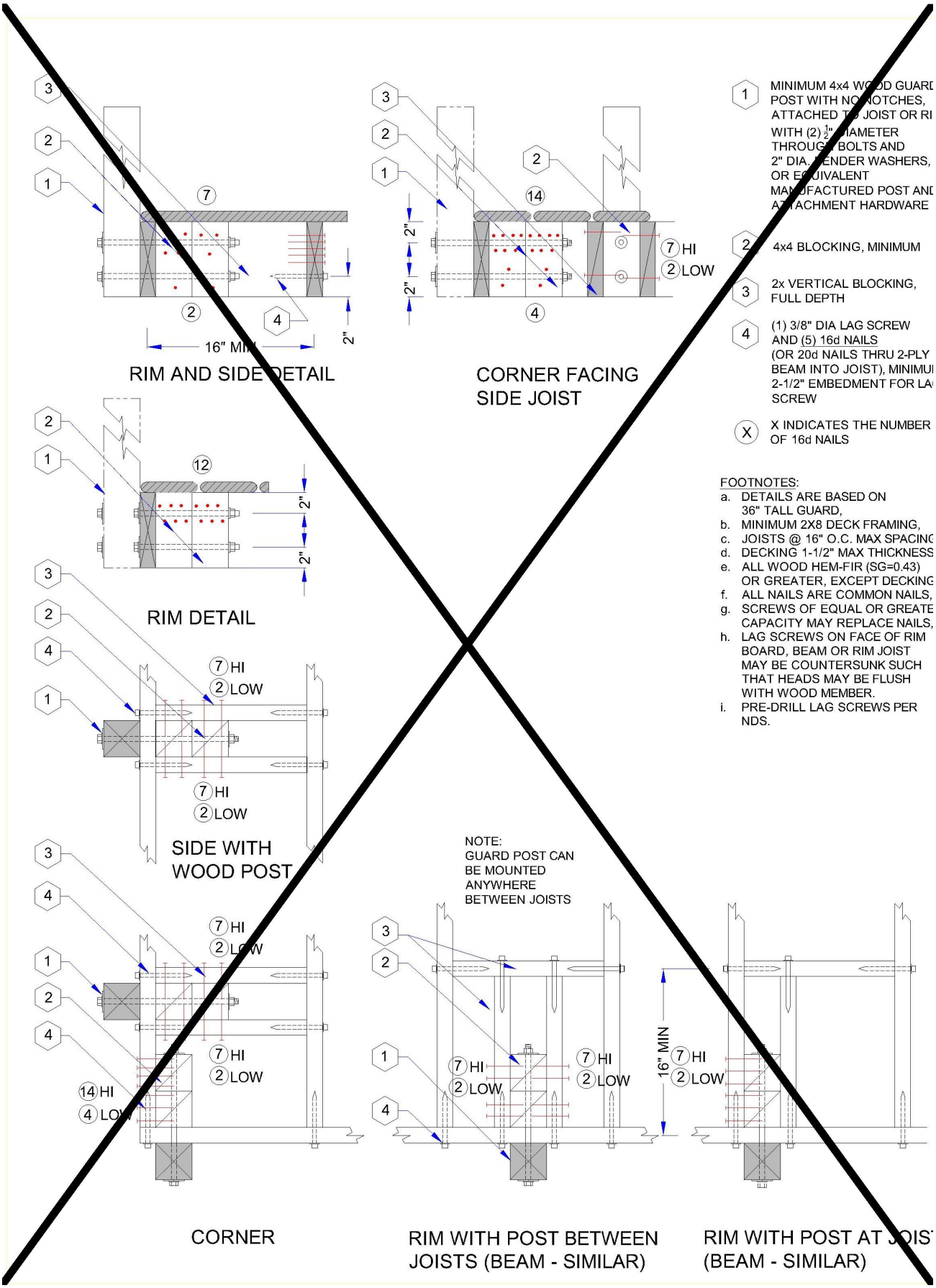
RIM AND SIDE DETAIL
16" MIN
2"
CORNER FACING SIDE JOIST
7 HI
2 LOW
RIM DETAIL
SIDE WITH WOOD POST
7 HI
2 LOW
14 HI
4 LOW
CORNER
NOTE:
GUARD POST CAN BE MOUNTED ANYWHERE BETWEEN JOISTS
16" MIN
RIM WITH POST BETWEEN JOISTS (BEAM - SIMILAR)
RIM WITH POST AT JOIST (BEAM - SIMILAR)
1 MINIMUM 4x4 WOOD GUARD POST WITH NO NOTCHES, ATTACHED TO JOIST OR RIM WITH (2) 1/2" DIAMETER THROUGH BOLTS AND 2" DIA. TENDER WASHERS, OR EQUIVALENT MANUFACTURED POST AND ATTACHMENT HARDWARE
2 4x4 BLOCKING, MINIMUM
3 2x VERTICAL BLOCKING, FULL DEPTH
4 (1) 3/8" DIA LAG SCREW AND (5) 16d NAILS (OR 20d NAILS THRU 2-PLY BEAM INTO JOIST), MINIMUM 2-1/2" EMBEDMENT FOR LAG SCREW
X X INDICATES THE NUMBER OF 16d NAILS
FOOTNOTES:
a. DETAILS ARE BASED ON 36" TALL GUARD,
b. MINIMUM 2X8 DECK FRAMING,
c. JOISTS @ 16" O.C. MAX SPACING
d. DECKING 1-1/2" MAX THICKNESS
e. ALL WOOD HEM-FIR (SG=0.43) OR GREATER, EXCEPT DECKING
f. ALL NAILS ARE COMMON NAILS,
g. SCREWS OF EQUAL OR GREATER CAPACITY MAY REPLACE NAILS,
h. LAG SCREWS ON FACE OF RIM BOARD, BEAM OR RIM JOIST MAY BE COUNTERSUNK SUCH THAT HEADS MAY BE FLUSH WITH WOOD MEMBER.
i. PRE-DRILL LAG SCREWS PER NDS.

FOOTNOTES:
a) DETAILS ARE BASED ON 36" TALL GUARD.
b) MIN. 2x8 DECK FRAMING.
c) JOISTS SPACED AT 16" O.C. MAX.
d) DECKING MAX THICKNESS 1½".
e) ALL WOOD HEM–FIR (SG=0.43) OR GREATER EXCEPT DECKING.
f) ALL NAILS ARE COMMON NAILS. REF. TABLE 602.3.(1) 10d (3" X 0.148"), 16d (3 ½" X 0.162").
g) SCREWS OF EQUAL OR GREATER CAPACITY MAY REPLACE NAILS SHOWN.
h) LAG SCREWS ON FACE OF RIM BOARD, BEAM, BLOCKING, OR RIM JOIST MAY BE COUNTERSUNK SUCH THAT THE HEADS OF THE SCREW MAY BE FLUSH WITH THE WOOD MEMBER.
i) PRE–DRILL ALL LAG SCREWS TO PREVENT SPLITTING.
j) GUARD ASSEMBLY MUST PROVIDE A CONTINUOUS LOAD PATH FOR ALL GUARD LOADS BETWEEN POSTS OR SUPPORTS.

GUARD POST HARDWARE SCHEDULE	
MARK	HARDWARE
1	MIN. 4x4 WOOD GUARD POST WITH NO NOTCHES. ATTACHED TO JOIST OR RIM W/ (2) ½"ø THROUGH BOLTS AND 2"ø FENDER WASHERS OR EQUIVALENT MANUFACTURED POST AND ATTACHMENT HARDWARE.
2	4x4 BLOCKING, MINIMUM.
3	2x VERTICAL BLOCKING, FULL DEPTH
4	(1) ⅜"ø LAG SCREW AND (5) 16d NAILS (OR 20d NAILS THRU 2–PLY BEAM INTO JOIST) MIN. 2½" EMBED. FOR LAG SCREW
#	NUMBER OF 16d NAILS REQUIRED

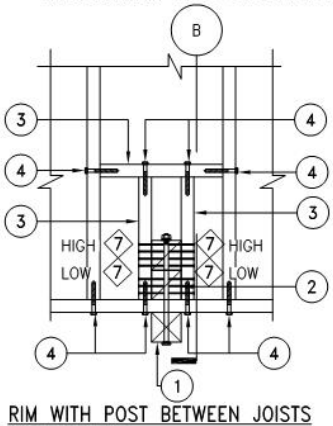

RIM WITH POST BETWEEN JOISTS
(BEAM SIMILAR)

NOTE:
GUARD POST CAN BE MOUNTED ANYWHERE BETWEEN JOISTS.

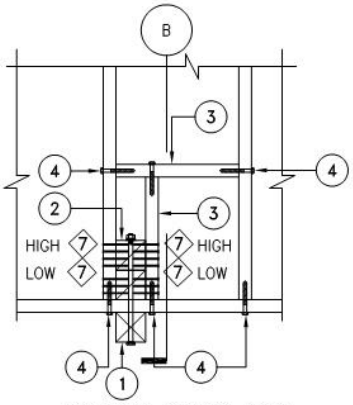

RIM WITH POST @ JOIST
(BEAM SIMILAR)

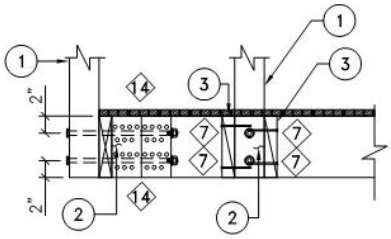

A SECTION
NTS

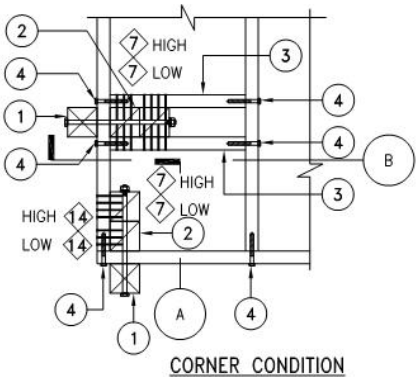

CORNER CONDITION

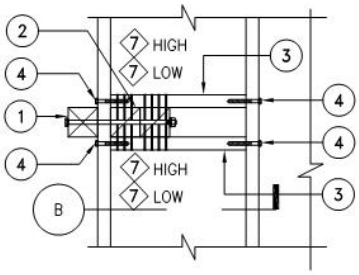

SIDE CONDITION

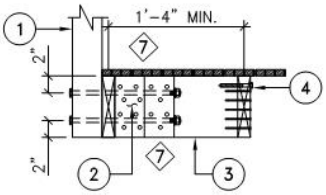

B SECTION
NTS

507.8.1 (1) EXTERIOR MOUNTED GUARD POST
NTS

FIGURE ~~R507.8.1.1(2~~ R507.8.1(2)
INTERIOR MOUNTED GUARD POSTS

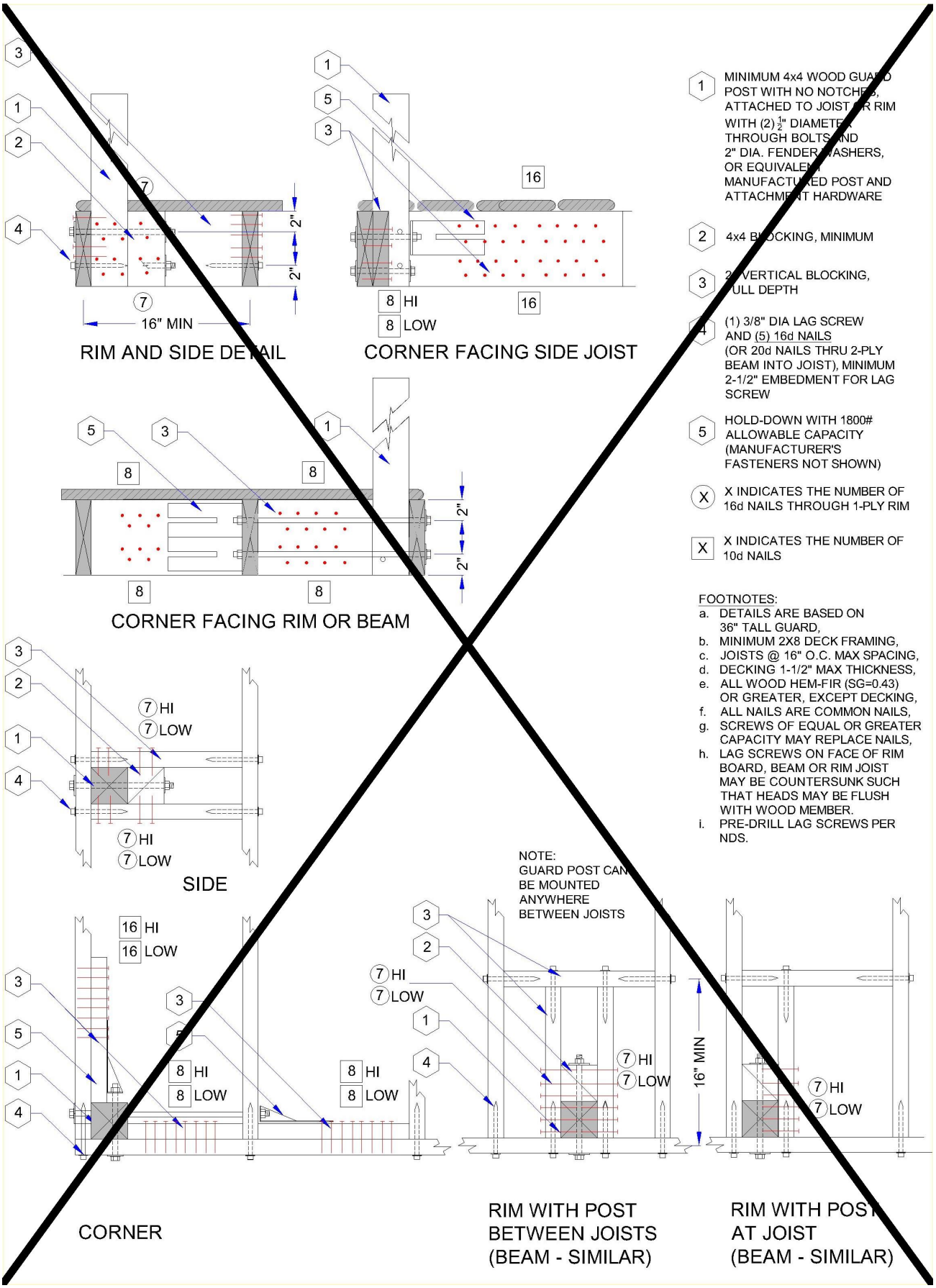
RIM AND SIDE DETAIL
16" MIN
2"
2"
CORNER FACING SIDE JOIST
8 HI
8 LOW
CORNER FACING RIM OR BEAM
SIDE
7 HI
7 LOW
CORNER
16 HI
16 LOW
8 HI
8 LOW
RIM WITH POST BETWEEN JOISTS (BEAM - SIMILAR)
NOTE: GUARD POST CAN BE MOUNTED ANYWHERE BETWEEN JOISTS
16" MIN
RIM WITH POST AT JOIST (BEAM - SIMILAR)
1 MINIMUM 4x4 WOOD GUARD POST WITH NO NOTCHES, ATTACHED TO JOIST OR RIM WITH (2) ½" DIAMETER THROUGH BOLTS AND 2" DIA. FENDER WASHERS, OR EQUIVALENT MANUFACTURED POST AND ATTACHMENT HARDWARE
2 4x4 BLOCKING, MINIMUM
3 2x VERTICAL BLOCKING, FULL DEPTH
4 (1) 3/8" DIA LAG SCREW AND (5) 16d NAILS (OR 20d NAILS THRU 2-PLY BEAM INTO JOIST), MINIMUM 2-1/2" EMBEDMENT FOR LAG SCREW
5 HOLD-DOWN WITH 1800# ALLOWABLE CAPACITY (MANUFACTURER'S FASTENERS NOT SHOWN)
X X INDICATES THE NUMBER OF 16d NAILS THROUGH 1-PLY RIM
X X INDICATES THE NUMBER OF 10d NAILS
FOOTNOTES:
a. DETAILS ARE BASED ON 36" TALL GUARD,
b. MINIMUM 2X8 DECK FRAMING,
c. JOISTS @ 16" O.C. MAX SPACING,
d. DECKING 1-1/2" MAX THICKNESS,
e. ALL WOOD HEM-FIR (SG=0.43) OR GREATER, EXCEPT DECKING,
f. ALL NAILS ARE COMMON NAILS,
g. SCREWS OF EQUAL OR GREATER CAPACITY MAY REPLACE NAILS,
h. LAG SCREWS ON FACE OF RIM BOARD, BEAM OR RIM JOIST MAY BE COUNTERSUNK SUCH THAT HEADS MAY BE FLUSH WITH WOOD MEMBER.
i. PRE-DRILL LAG SCREWS PER NDS.

FOOTNOTES:
a) DETAILS ARE BASED ON 36" TALL GUARD.
b) MIN. 2x8 DECK FRAMING.
c) JOISTS SPACED AT 16" O.C. MAX.
d) DECKING MAX THICKNESS 1½".
e) ALL WOOD HEM-FIR (SG=0.43) OR GREATER EXCEPT DECKING.
f) ALL NAILS ARE COMMON NAILS. REF. TABLE 602.3.(1) 10d (3" X 0.148"), 16d (3 ½" X 0.162").
g) SCREWS OF EQUAL OR GREATER CAPACITY MAY REPLACE NAILS SHOWN.
h) LAG SCREWS ON FACE OF RIM BOARD, BEAM, BLOCKING, OR RIM JOIST MAY BE COUNTERSUNK SUCH THAT THE HEADS OF THE SCREW MAY BE FLUSH WITH THE WOOD MEMBER.
i) PRE-DRILL ALL LAG SCREWS TO PREVENT SPLITTING.
j) GUARD ASSEMBLY MUST PROVIDE A CONTINUOUS LOAD PATH FOR ALL GUARD LOADS BETWEEN POSTS OR SUPPORTS.

GUARD POST HARDWARE SCHEDULE	
MARK	HARDWARE
1	MIN. 4x4 WOOD GUARD POST WITH NO NOTCHES. ATTACHED TO JOIST OR RIM W/ (2) ½"ø THROUGH BOLTS AND 2"ø FENDER WASHERS OR EQUIVALENT MANUFACTURED POST AND ATTACHMENT HARDWARE.
2	4x4 BLOCKING, MINIMUM.
3	2x VERTICAL BLOCKING, FULL DEPTH
4	(1) ⅜"ø LAG SCREW AND (5) 16d NAILS (OR 20d NAILS THRU 2-PLY BEAM INTO JOIST) MIN. 2½" EMBED. FOR LAG SCREW
5	HOLD-DOWN WITH 1800 LBS ALLOWABLE CAPACITY (INSTALL PER MANUFACTURER'S SPECIFICATIONS, FASTENERS NOT SHOWN).
◇#	NUMBER OF 16d NAILS THROUGH 1-PLY RIM
#	NUMBER OF 10d NAILS REQUIRED

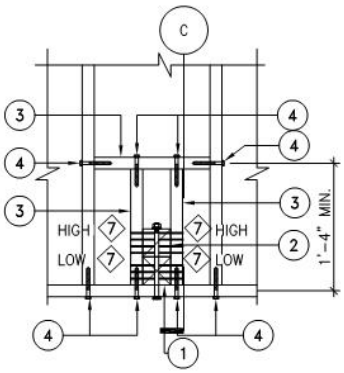

RIM WITH POST BETWEEN JOISTS
(BEAM SIMILAR)

NOTE:
GUARD POST CAN BE MOUNTED ANYWHERE BETWEEN JOISTS.

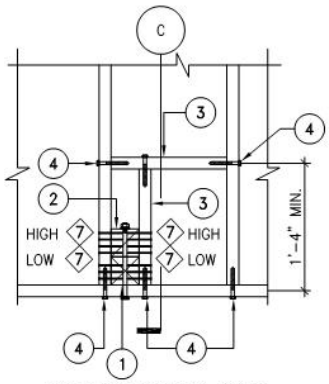

RIM WITH POST @ JOIST
(BEAM SIMILAR)

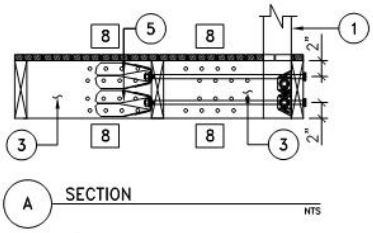

A SECTION
NTS

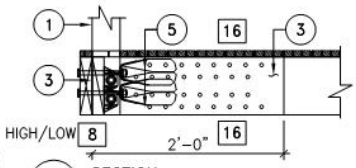

B SECTION
NTS

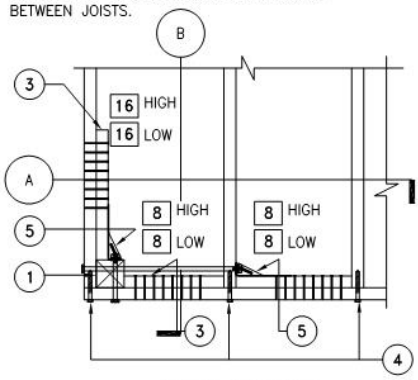

CORNER CONDITION

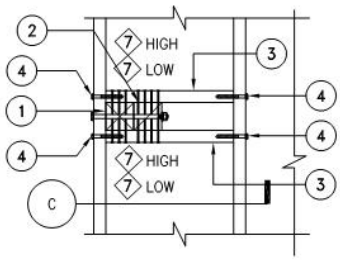

SIDE CONDITION

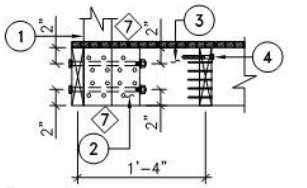

C SECTION
NTS

507.8.1 (2) INTERIOR MOUNTED GUARD POST
NTS

FIGURE ~~R507.8.1.1(3~~ R507.8.1(3)
EXTERIOR MOUNTED GUARD POSTS WITH HARDWARE

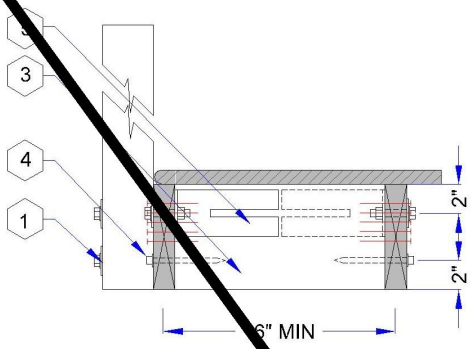

RIM AND SIDE DETAIL

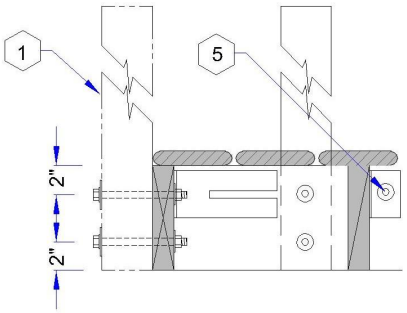

CORNER FACING SIDE JOIST

1 MINIMUM 4x4 WOOD GUARD POST WITH NO NOTCHES, ATTACHED TO JOIST OR RIM WITH (2) $\frac{1}{2}$" DIAMETER THROUGH BOLTS AND 2" DIA. FENDER WASHERS, OR EQUIVALENT MANUFACTURED POST AND ATTACHMENT HARDWARE

3 2x VERTICAL BLOCKING, FULL DEPTH

4 (1) 3/8" DIA LAG SCREW AND (5) 16d NAILS (OR 20d NAILS THRU 2-PLY BEAM INTO JOIST), MINIMUM 2-1/2" EMBEDMENT FOR LAG SCREW

5 HOLD-DOWN WITH 1800# ALLOWABLE CAPACITY (FASTENERS NOT SHOWN)

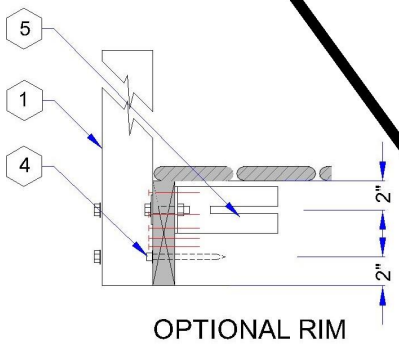

OPTIONAL RIM DETAIL

FOOTNOTES:

a. DETAILS ARE BASED ON 36" TALL GUARD,
b. MINIMUM 2X8 DECK FRAMING,
c. JOISTS @ 16" O.C. MAX SPACIN
d. DECKING 1-1/2" MAX THICKNES
e. ALL WOOD HEM-FIR (SG=0.43) OR GREATER, EXCEPT DECKIN
f. ALL NAILS ARE COMMON NAILS
g. SCREWS OF EQUAL OR GREAT CAPACITY MAY REPLACE NAILS
h. LAG SCREWS ON FACE OF RIM BOARD, BEAM OR RIM JOIST MAY BE COUNTERSUNK SUCH THAT HEADS MAY BE FLUSH WITH WOOD MEMBER.
i. PRE-DRILL LAG SCREWS PER NDS.

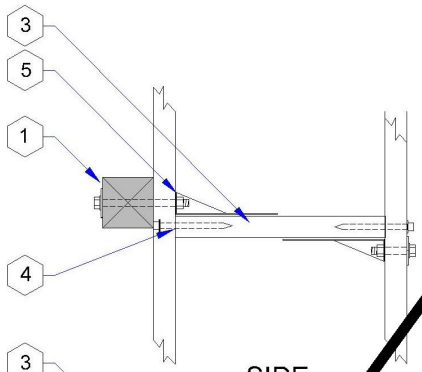

SIDE

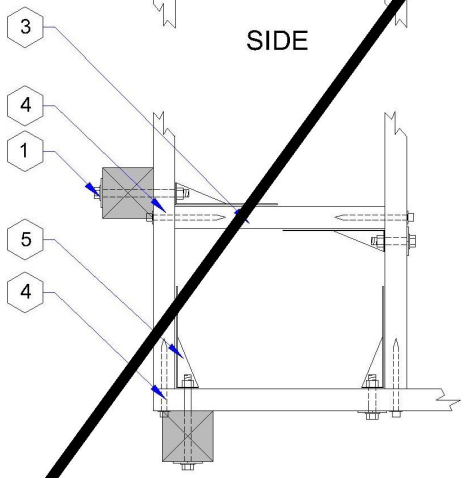

CORNER

NOTE:
GUARD POST CAN BE MOUNTED ANYWHERE BETWEEN JOISTS

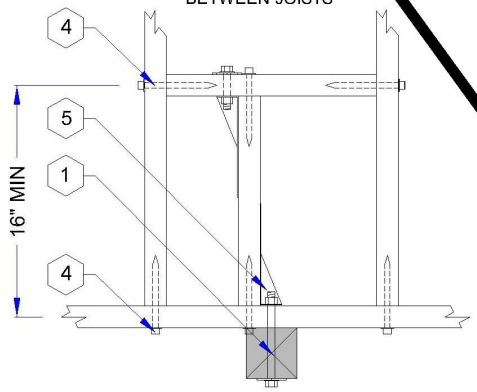

RIM WITH POST BETWEEN JOISTS (BEAM - SIMILAR)

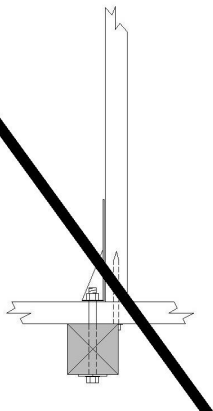

RIM WITH POST AT JOIST (BEAM - SIMILAR)

FOOTNOTES:
a) DETAILS ARE BASED ON 36" TALL GUARD.
b) MIN. 2x8 DECK FRAMING.
c) JOISTS SPACED AT 16" O.C. MAX.
d) DECKING MAX THICKNESS 1½".
e) ALL WOOD HEM–FIR (SG=0.43) OR GREATER EXCEPT DECKING.
f) ALL NAILS ARE COMMON NAILS. REF. TABLE 602.3.(1) 10d (3" X 0.148"), 16d (3 ½" X 0.162").
g) SCREWS OF EQUAL OR GREATER CAPACITY MAY REPLACE NAILS SHOWN.
h) LAG SCREWS ON FACE OF RIM BOARD, BEAM, BLOCKING, OR RIM JOIST MAY BE COUNTERSUNK SUCH THAT THE HEADS OF THE SCREW MAY BE FLUSH WITH THE WOOD MEMBER.
i) PRE–DRILL ALL LAG SCREWS TO PREVENT SPLITTING.
j) GUARD ASSEMBLY MUST PROVIDE A CONTINUOUS LOAD PATH FOR ALL GUARD LOADS BETWEEN POSTS OR SUPPORTS.

GUARD POST HARDWARE SCHEDULE	
MARK	HARDWARE
1	MIN. 4x4 WOOD GUARD POST WITH NO NOTCHES. ATTACHED TO JOIST OR RIM W/ (2) ½"ø THROUGH BOLTS AND 2"ø FENDER WASHERS OR EQUIVALENT MANUFACTURED POST AND ATTACHMENT HARDWARE.
3	2x VERTICAL BLOCKING, FULL DEPTH
4	(1) ⅜"ø LAG SCREW AND (5) 16d NAILS (OR 20d NAILS THRU 2–PLY BEAM INTO JOIST) MIN. 2½" EMBED. FOR LAG SCREW
5	HOLD–DOWN WITH 1800 LBS ALLOWABLE CAPACITY (INSTALL PER MANUFACTURER'S SPECIFICATIONS, FASTENERS NOT SHOWN).
#	NUMBER OF 16d NAILS REQUIRED

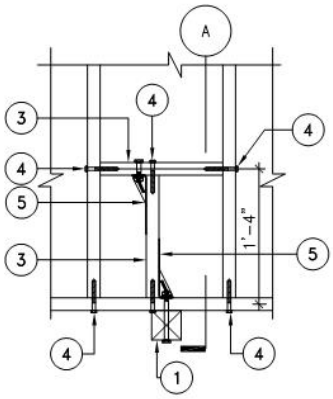

RIM WITH POST BETWEEN JOISTS
(BEAM SIMILAR)
NOTE:
GUARD POST CAN BE MOUNTED ANYWHERE BETWEEN JOISTS.

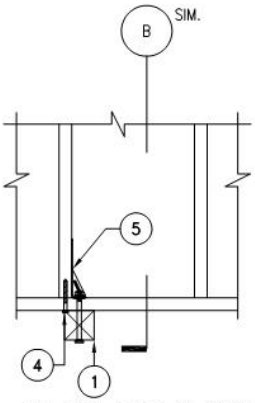

RIM WITH POST @ JOIST
(BEAM SIMILAR)

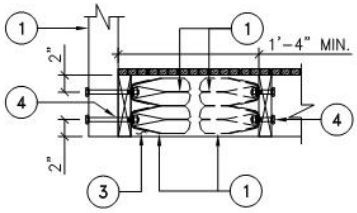

A SECTION
NTS

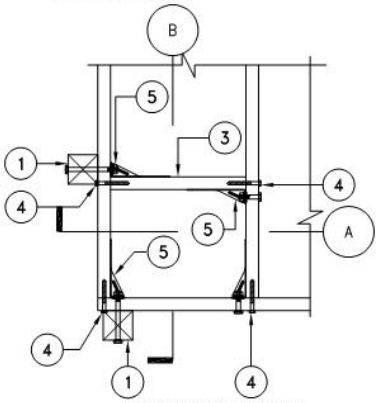

CORNER CONDITION

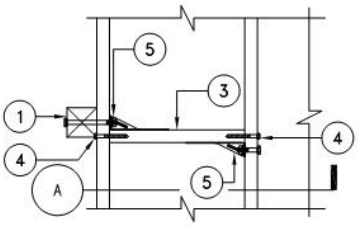

SIDE CONDITION

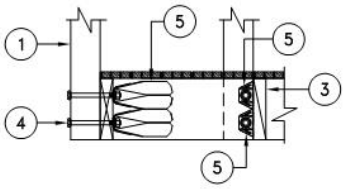

B SECTION
NTS

507.8.1 (3) EXTERIOR MOUNTED GUARD POST WITH HARDWARE
NTS

FIGURE ~~R507.8.1.1(4~~ R507.8.1(4)
INTERIOR MOUNTED GUARD POSTS WITH HARDWARE

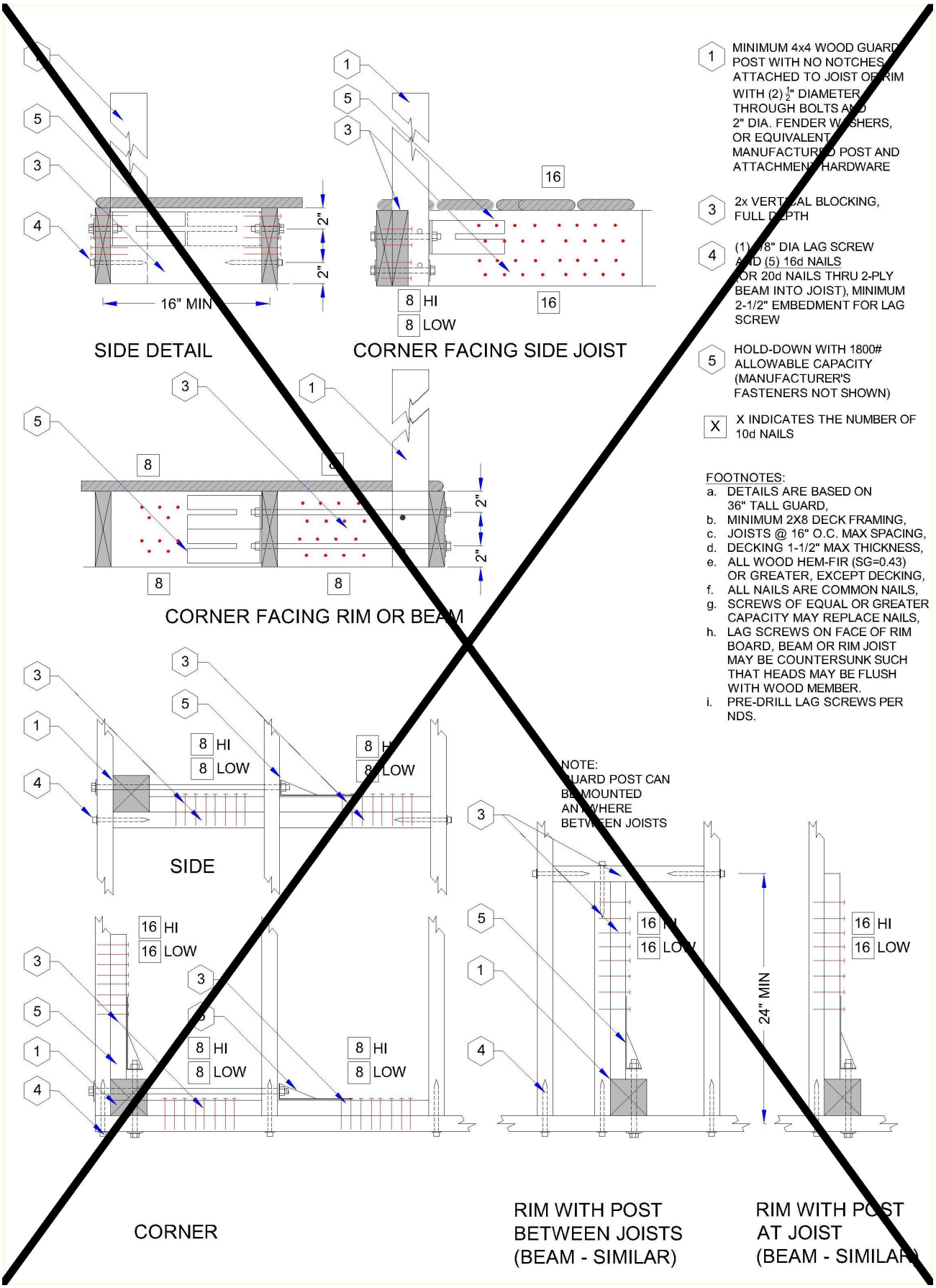
1 MINIMUM 4x4 WOOD GUARD POST WITH NO NOTCHES ATTACHED TO JOIST OR RIM WITH (2) 1/2" DIAMETER THROUGH BOLTS AND 2" DIA. FENDER WASHERS, OR EQUIVALENT MANUFACTURED POST AND ATTACHMENT HARDWARE
3 2x VERTICAL BLOCKING, FULL DEPTH
4 (1) 5/8" DIA LAG SCREW AND (5) 16d NAILS (OR 20d NAILS THRU 2-PLY BEAM INTO JOIST), MINIMUM 2-1/2" EMBEDMENT FOR LAG SCREW
5 HOLD-DOWN WITH 1800# ALLOWABLE CAPACITY (MANUFACTURER'S FASTENERS NOT SHOWN)
X X INDICATES THE NUMBER OF 10d NAILS
FOOTNOTES:
a. DETAILS ARE BASED ON 36" TALL GUARD,
b. MINIMUM 2X8 DECK FRAMING,
c. JOISTS @ 16" O.C. MAX SPACING,
d. DECKING 1-1/2" MAX THICKNESS,
e. ALL WOOD HEM-FIR (SG=0.43) OR GREATER, EXCEPT DECKING,
f. ALL NAILS ARE COMMON NAILS,
g. SCREWS OF EQUAL OR GREATER CAPACITY MAY REPLACE NAILS,
h. LAG SCREWS ON FACE OF RIM BOARD, BEAM OR RIM JOIST MAY BE COUNTERSUNK SUCH THAT HEADS MAY BE FLUSH WITH WOOD MEMBER.
i. PRE-DRILL LAG SCREWS PER NDS.
16" MIN
2"
2"
SIDE DETAIL
8 HI
8 LOW
16
CORNER FACING SIDE JOIST
CORNER FACING RIM OR BEAM
8 HI
8 LOW
SIDE
16 HI
16 LOW
8 HI
8 LOW
CORNER
NOTE:
GUARD POST CAN BE MOUNTED ANYWHERE BETWEEN JOISTS
24" MIN
RIM WITH POST BETWEEN JOISTS (BEAM - SIMILAR)
RIM WITH POST AT JOIST (BEAM - SIMILAR)

FOOTNOTES:
a) DETAILS ARE BASED ON 36" TALL GUARD.
b) MIN. 2x8 DECK FRAMING.
c) JOISTS SPACED AT 16" O.C. MAX.
d) DECKING MAX THICKNESS 1½".
e) ALL WOOD HEM–FIR (SG=0.43) OR GREATER EXCEPT DECKING.
f) ALL NAILS ARE COMMON NAILS. REF. TABLE 602.3.(1) 10d (3" X 0.148"), 16d (3 ½" X 0.162").
g) SCREWS OF EQUAL OR GREATER CAPACITY MAY REPLACE NAILS SHOWN.
h) LAG SCREWS ON FACE OF RIM BOARD, BEAM, BLOCKING, OR RIM JOIST MAY BE COUNTERSUNK SUCH THAT THE HEADS OF THE SCREW MAY BE FLUSH WITH THE WOOD MEMBER.
i) PRE–DRILL ALL LAG SCREWS TO PREVENT SPLITTING.
j) GUARD ASSEMBLY MUST PROVIDE A CONTINUOUS LOAD PATH FOR ALL GUARD LOADS BETWEEN POSTS OR SUPPORTS.

GUARD POST HARDWARE SCHEDULE	
MARK	HARDWARE
1	MIN. 4x4 WOOD GUARD POST WITH NO NOTCHES. ATTACHED TO JOIST OR RIM W/ (2) ½"ø THROUGH BOLTS AND 2"ø FENDER WASHERS OR EQUIVALENT MANUFACTURED POST AND ATTACHMENT HARDWARE.
3	2x VERTICAL BLOCKING, FULL DEPTH
4	(1) ⅜"ø LAG SCREW AND (5) 16d NAILS (OR 20d NAILS THRU 2–PLY BEAM INTO JOIST) MIN. 2½" EMBED. FOR LAG SCREW
5	HOLD–DOWN WITH 1800 LBS ALLOWABLE CAPACITY (INSTALL PER MANUFACTURER'S SPECIFICATIONS, FASTENERS NOT SHOWN).
#	NUMBER OF 10d NAILS REQUIRED
◇#	NUMBER OF 16d NAILS REQUIRED

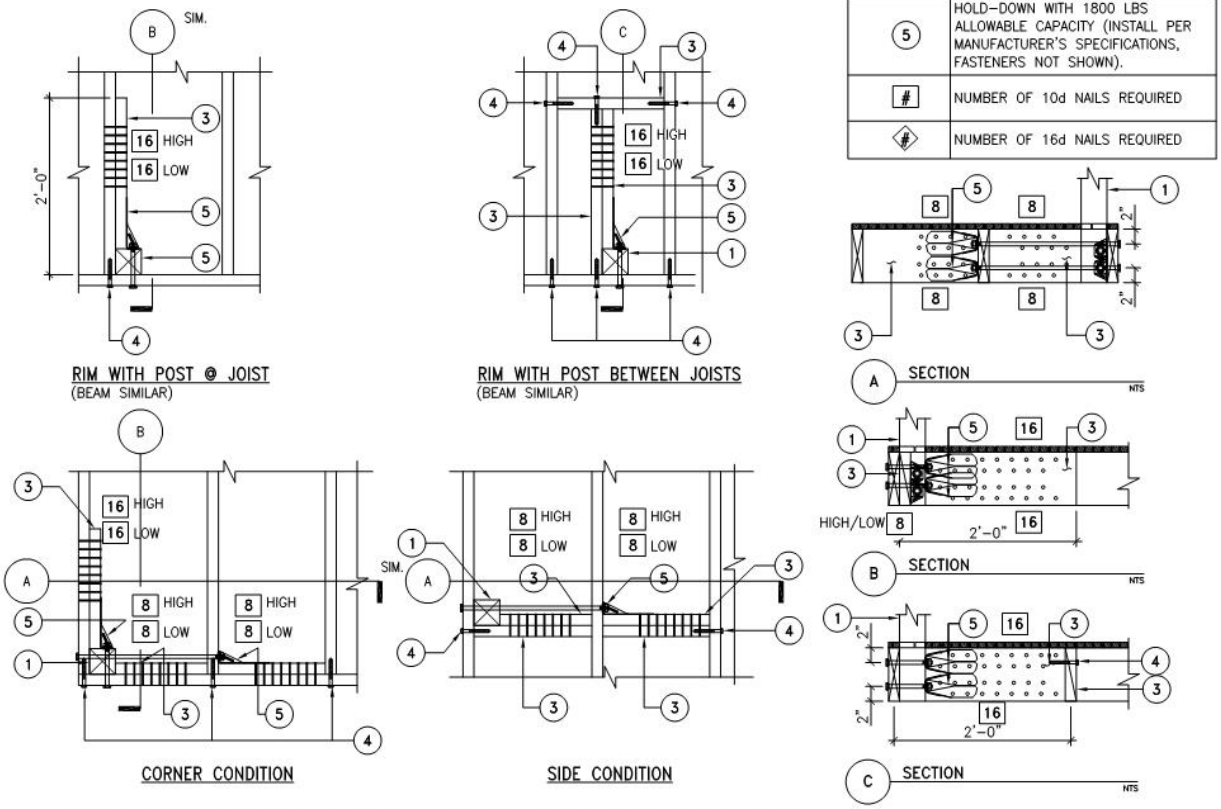

507.8.1 (4) INTERIOR MOUNTED GUARD POST WITH HARDWARE

NTS

FIGURE ~~R507.8.1.1(5~~ R507.8.1(5)
TOP MOUNTED GUARD POSTS ON RIM

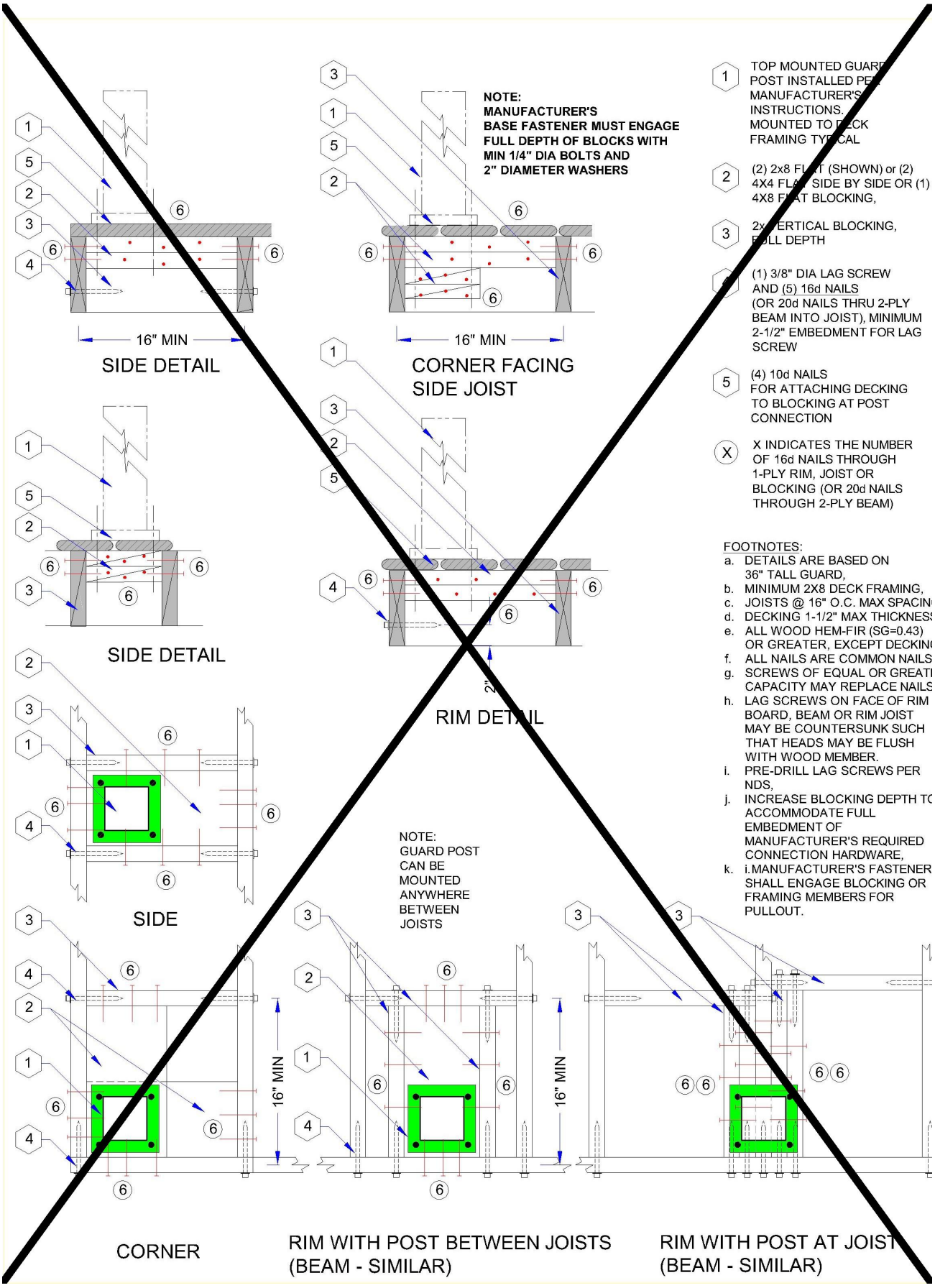
NOTE:
MANUFACTURER'S
BASE FASTENER MUST ENGAGE
FULL DEPTH OF BLOCKS WITH
MIN 1/4" DIA BOLTS AND
2" DIAMETER WASHERS
16" MIN
SIDE DETAIL
CORNER FACING
SIDE JOIST
SIDE DETAIL
RIM DETAIL
2"
SIDE
NOTE:
GUARD POST
CAN BE
MOUNTED
ANYWHERE
BETWEEN
JOISTS
16" MIN
CORNER
RIM WITH POST BETWEEN JOISTS
(BEAM - SIMILAR)
RIM WITH POST AT JOIST
(BEAM - SIMILAR)
1 TOP MOUNTED GUARD POST INSTALLED PER MANUFACTURER'S INSTRUCTIONS. MOUNTED TO DECK FRAMING TYPICAL
2 (2) 2x8 FLAT (SHOWN) or (2) 4X4 FLAT SIDE BY SIDE OR (1) 4X8 FLAT BLOCKING,
3 2x VERTICAL BLOCKING, FULL DEPTH
4 (1) 3/8" DIA LAG SCREW AND (5) 16d NAILS (OR 20d NAILS THRU 2-PLY BEAM INTO JOIST), MINIMUM 2-1/2" EMBEDMENT FOR LAG SCREW
5 (4) 10d NAILS FOR ATTACHING DECKING TO BLOCKING AT POST CONNECTION
X X INDICATES THE NUMBER OF 16d NAILS THROUGH 1-PLY RIM, JOIST OR BLOCKING (OR 20d NAILS THROUGH 2-PLY BEAM)
FOOTNOTES:
a. DETAILS ARE BASED ON 36" TALL GUARD,
b. MINIMUM 2X8 DECK FRAMING,
c. JOISTS @ 16" O.C. MAX SPACIN
d. DECKING 1-1/2" MAX THICKNES
e. ALL WOOD HEM-FIR (SG=0.43) OR GREATER, EXCEPT DECKIN
f. ALL NAILS ARE COMMON NAILS
g. SCREWS OF EQUAL OR GREATI CAPACITY MAY REPLACE NAILS
h. LAG SCREWS ON FACE OF RIM BOARD, BEAM OR RIM JOIST MAY BE COUNTERSUNK SUCH THAT HEADS MAY BE FLUSH WITH WOOD MEMBER.
i. PRE-DRILL LAG SCREWS PER NDS,
j. INCREASE BLOCKING DEPTH TO ACCOMMODATE FULL EMBEDMENT OF MANUFACTURER'S REQUIRED CONNECTION HARDWARE,
k. i.MANUFACTURER'S FASTENER SHALL ENGAGE BLOCKING OR FRAMING MEMBERS FOR PULLOUT.

FOOTNOTES:
a) DETAILS ARE BASED ON 36" TALL GUARD.
b) MIN. 2x8 DECK FRAMING.
c) JOISTS SPACED AT 16" O.C. MAX.
d) DECKING MAX THICKNESS 1½".
e) ALL WOOD HEM-FIR (SG=0.43) OR GREATER EXCEPT DECKING.
f) ALL NAILS ARE COMMON NAILS. REF. TABLE 602.3.(1) 10d (3" X 0.148"), 16d (3 ½" X 0.162").
g) SCREWS OF EQUAL OR GREATER CAPACITY MAY REPLACE NAILS SHOWN.
h) LAG SCREWS ON FACE OF RIM BOARD, BEAM, BLOCKING, OR RIM JOIST MAY BE COUNTERSUNK SUCH THAT THE HEADS OF THE SCREW MAY BE FLUSH WITH THE WOOD MEMBER.
i) PRE-DRILL ALL LAG SCREWS TO PREVENT SPLITTING.
j) INCREASE BLOCKING DEPTH TO ACCOMMODATE FULL EMBEDMENT OF MANUFACTURER'S REQUIRED CONNECTION HARDWARE.
k) MANUFACTURER'S FASTENERS SHALL ENGAGE BLOCKING OR FRAMING MEMBERS FOR PULLOUT.
l) GUARD ASSEMBLY MUST PROVIDE A CONTINUOUS LOAD PATH FOR ALL GUARD LOADS BETWEEN POSTS OR SUPPORTS.

GUARD POST HARDWARE SCHEDULE	
MARK	HARDWARE
1	TOP MOUNTED GUARD POST INSTALLED PER MANUFACTURER'S INSTRUCTIONS MOUNTED TO DECK FRAMING TYPICAL.
2	(2) 2x8 LAID FLAT (SHOWN) OR (2) 4x4 LAID FLAT SIDE BY SIDE OR (1) 4x8 LAID FLAT BLOCKING.
3	2x VERTICAL BLOCKING, FULL DEPTH
4	(1) ⅜"ø LAG SCREW AND (5) 16d NAILS (OR 20d NAILS THRU 2-PLY BEAM INTO JOIST), MINIMUM 2½" EMBEDMENT FOR LAG SCREW.
5	(4) 10d NAILS FOR ATTACHING DECKING TO BLOCKING AT POST CONNECTION
#	NUMBER OF 10d NAILS REQUIRED
◇#	NUMBER OF 16d NAILS REQUIRED THROUGH 1-PLY RIM JOIST OR BLOCKING (OR 20d MAILS THROUGH 2-PLY BEAM).

NOTE:
MANUFACTURER'S BASE FASTENER MUST ENGAGE FULL DEPTH OF BLOCKS WITH ¼"ø BOLTS AND 2"ø WASHERS.

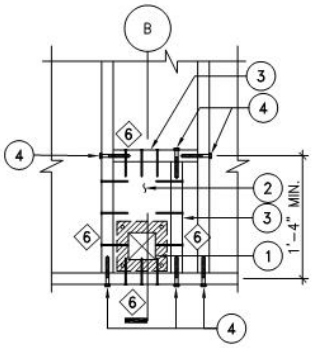

RIM WITH POST AT JOIST
(BEAM SIMILAR)

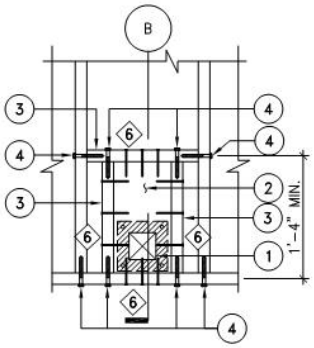

RIM WITH POST BETWEEN JOISTS
(BEAM SIMILAR)
NOTE:
GUARD POST CAN BE MOUNTED ANYWHERE BETWEEN JOISTS.

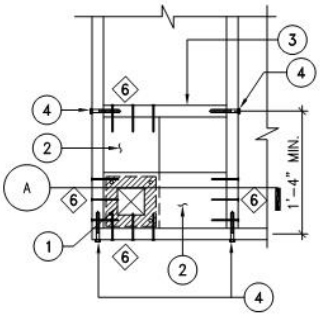

CORNER CONDITION

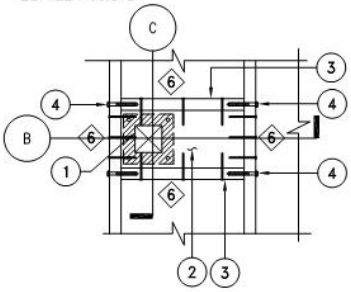

SIDE CONDITION

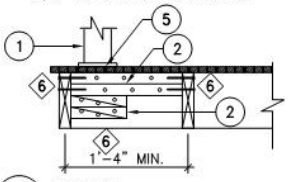

A SECTION
NTS

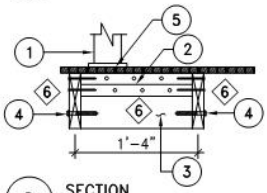

B SECTION
NTS

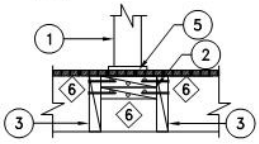

C SECTION
NTS

507.8.1 (5) TOP MOUNTED GUARD POST
NTS

~~R507.8.1.1(6)~~
~~TOP MOUNTED GUARD POSTS OFF RIM~~

Commenter's Reason:
This public comment, submitted by the Deck Code Coalition, addresses the concerns of the committee and opposition as it complies with the requirements for ASCE-7.

While similar to the original proposals, the text and detail drawings were modified to accommodate the 200# downward/upward and the 200# inward/outward.

The calculations have been provided to the opponents and they have acknowledged that everything looks in order.

If you believe that the code needs prescriptive language for attaching guards to the deck per ASCE-7, then please support this public comment.

Proponent : Charles Bajnai, representing Deck Code Coalition and Chesterfield County, VA; and North American Deck and Railing Association (NADRA) (bajnaic@chesterfield.gov) requests Approve as Submitted.

Commenter's Reason:
The Deck Code Committee worked hard on the original proposal, and we think we acheived a good balance between too much and not enough.

This public comment by the Deck Code Coalition provides no new text or any new drawings.

If you believe that this proposal is better than the vacuum that currently exists, this proposal provides the minimal guidance for construction of guards. Please vote for Approve as Submitted.

RB211-16

RB217-16

IRC: R602.1.11 (New), R610.10, R610.2, R610.3.1, R610.3.2, R610.3.3, R610.3.4, R610.3.5, R610.3.6, R610.4, R610.4.1, R610.5, R610.5.1, R610.5.2, R610.5.3, R610.5.3 (New), R610.5.4 (New), R610.5.6 (New), R610.8, R610.9.

Proposed Change as Submitted

Proponent : Edward Keith, representing APA- The Engineered Wood Association (ed.keith@apawood.org)

2015 International Residential Code

Add new text as follows:

R602.1.11 Structural insulated panels. Structural insulated panels shall be manufactured and identified in accordance with ANSI/APA PRS 610.1

Revise as follows:

R610.2 Applicability limits. The provisions of this section shall control the construction of exterior structural insulated panel walls and interior load-bearing structural insulated panel walls for buildings not greater than 60 feet (18 288 mm) in length perpendicular to the joist or truss span, not greater than 40 feet (12 192 mm) in width parallel to the joist or truss span and not greater than two stories in height with each wall not greater than 10 feet (3048 mm) high. Exterior walls installed in accordance with the provisions of this section shall be considered as load-bearing walls. Structural insulated panel walls constructed in accordance with the provisions of this section shall be limited to sites where the ultimate design wind speed (V_{ult}) is not greater than 155 miles per hour (69 m/s), Exposure B or 140 miles per hour (63 m/s) Exposure C, the ground snow load is not greater than 70 pounds per square foot (3.35 kPa), and the seismic design category is A, B or C.

~~**R610.3.1**~~

~~**MINIMUM PROPERTIES FOR POLYURETHANE INSULATION USED AS SIPS CORE**~~

~~For SI: 1 pound per cubic foot = 16.02 kg/m^3, 1 pound per square inch = 6.895 kPa, °C = [(°F) - 32]1.8.~~

Delete without substitution:

~~**R610.3.2 Facing.** Facing materials for SIPs shall be wood structural panels conforming to DOC PS 1 or DOC PS 2, each having a minimum nominal thickness of 7/16 inch (11 mm) and shall meet the additional minimum properties specified in Table R610.3.2. Facing shall be identified by a grade mark or certificate of inspection issued by an *approved* agency.~~

~~**R610.3.2**~~

~~**MINIMUM PROPERTIES[a] FOR ORIENTED STRAND BOARD FACER MATERIAL IN SIP WALLS**~~

~~For SI: 1 inch = 25.4 mm, 1 lbf-in^2/ft = 9.415 × 10^{-6} kPa/m, 1 lbf-in/ft = 3.707 × 10^{-4} kN/m, 1 lbf/ft = 0.0146 N/mm, 1 pound per cubic foot = 16.018 kg/m^3.~~

~~a. Values listed in Table R610.3.2 are qualification test values and are not to be used for design purposes.~~
~~b. Mean test value shall be in accordance with Section 7.6 of DOC PS 2.~~
~~c. Characteristic test value (5th percent with 75% confidence).~~
~~d. Density shall be based on oven-dry weight and oven-dry volume.~~

~~**R610.3.3 Adhesive.** Adhesives used to structurally laminate the foam plastic insulation core material to the structural wood facers shall conform to ASTM D 2559 or *approved* alternative specifically intended for use as an adhesive used in the lamination of structural insulated panels. Each container of adhesive shall bear a *label* with the adhesive manufacturer's name, adhesive name and type and the name of the quality assurance agency.~~

~~**R610.3.4**~~ **R610.3.2 Lumber.** *No change to text.*

Revise as follows:

~~**R610.3.5**~~ **R610.3.3 SIP screws.** *No change to text.*

~~**R610.3.6**~~ **R610.3.4 Nails.** *No change to text.*

R610.4 SIP wall panels. SIPs shall comply with Figure R610.4 and shall have minimum panel thickness in accordance with Tables R610.5(1) and R610.5(2) for above-grade walls. SIPs shall be identified by grade mark or certificate of inspection issued by an *approved* agency in accordance with ANSI/APA PRS 610.1.

Delete without substitution:

~~**R610.4.1 Labeling.** Panels shall be identified by grade mark or certificate of inspection issued by an *approved* agency. Each (SIP) shall bear a stamp or *label* with the following minimum information:~~

~~1. Manufacturer name/logo.~~
~~2. Identification of the assembly.~~
~~3. Quality assurance agency.~~

Delete and substitute as follows:

FIGURE R610.5 (1)
MAXIMUM ALLOWABLE HEIGHT OF SIP WALLS

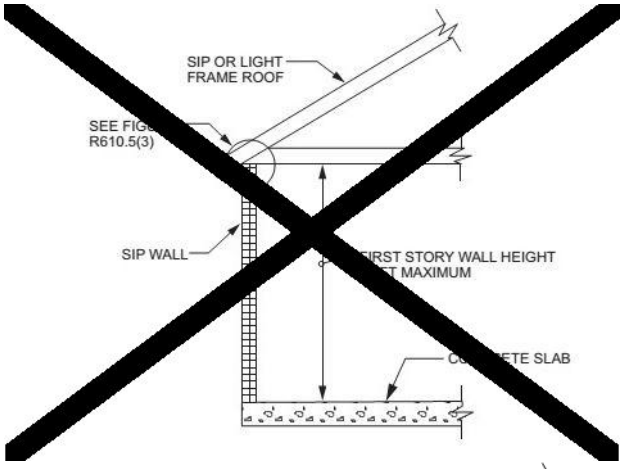

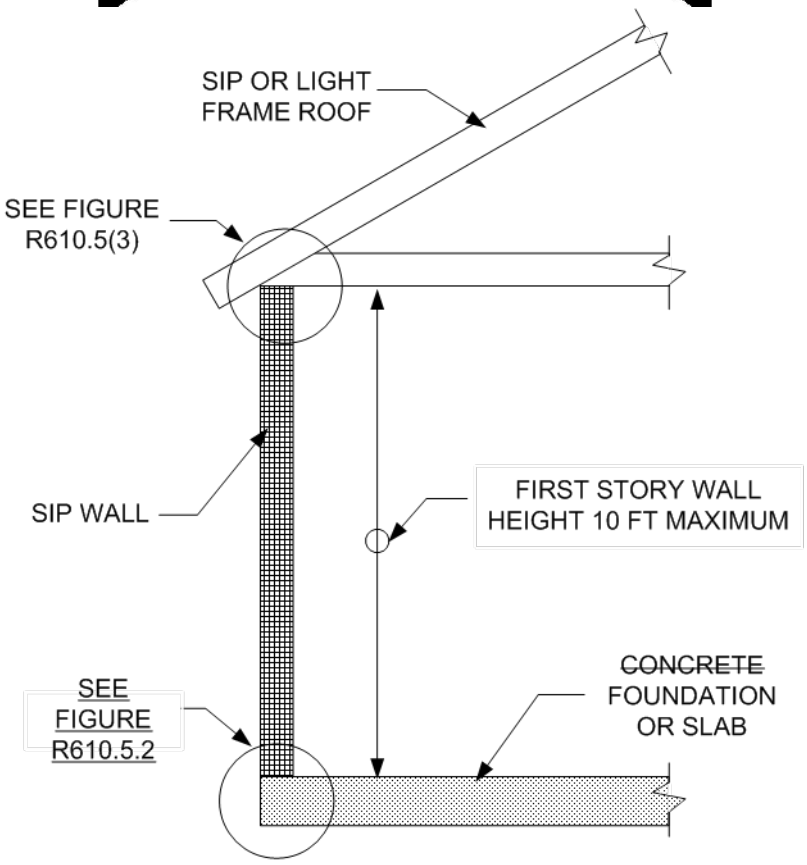

For SI: 1 foot = 304.8 mm.
For SI: 1 foot = 304.8 mm.

FIGURE R610.5 (2)
MAXIMUM ALLOWABLE HEIGHT OF SIP WALLS

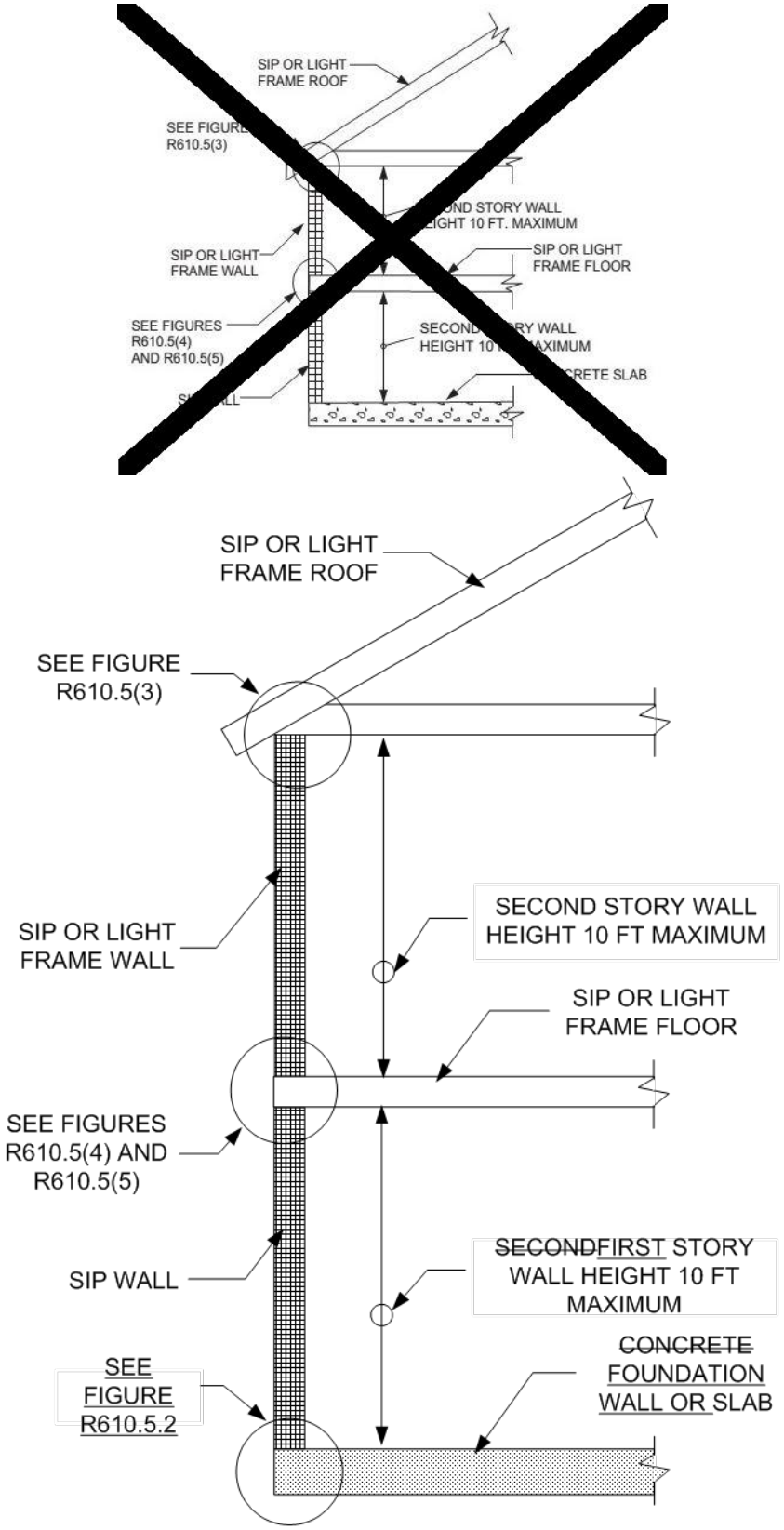

For SI: 1 inch = 25.4 mm

FIGURE R610.5 (3)
~~TRUSSED ROOF~~ TRUSS OR CONVENTIONALRAFTER TO TOP PLATE CONNECTION

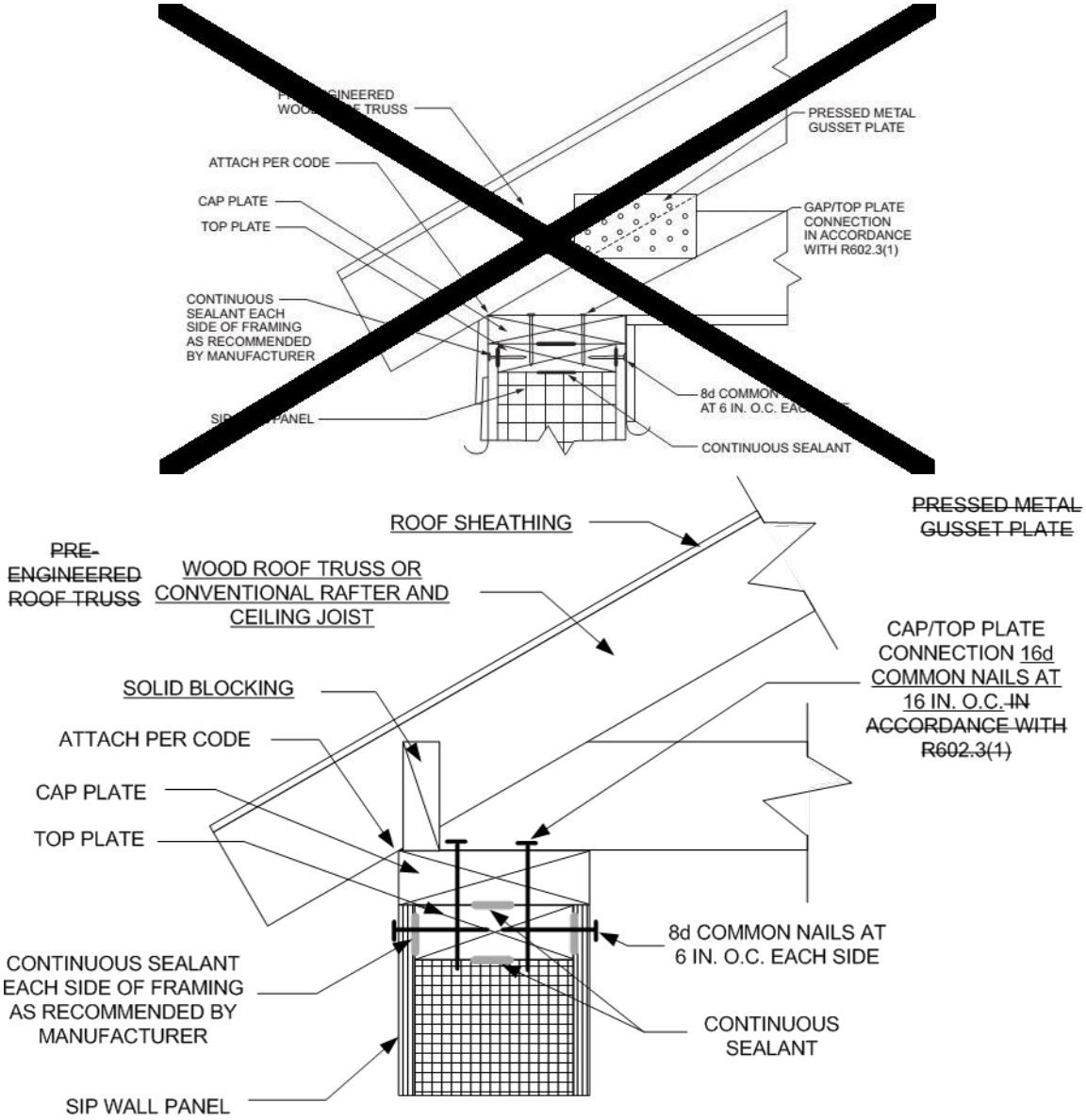

For SI: 1 inch = 25.4 mm.
Note:Figures illustrate SIP-specific attachment requirements. Other connections shall be made in accordance with Tables R602.3(1) and (2) as appropriate.

FIGURE R610.5 (4)
SIP WALL-TO-WALL PLATFORM FRAME CONNECTION

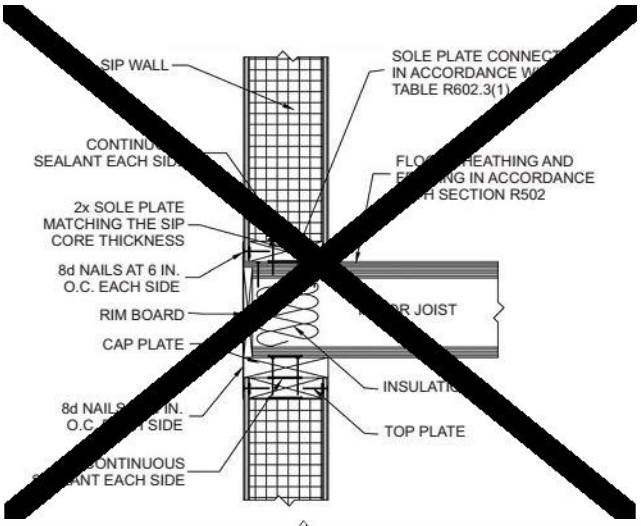

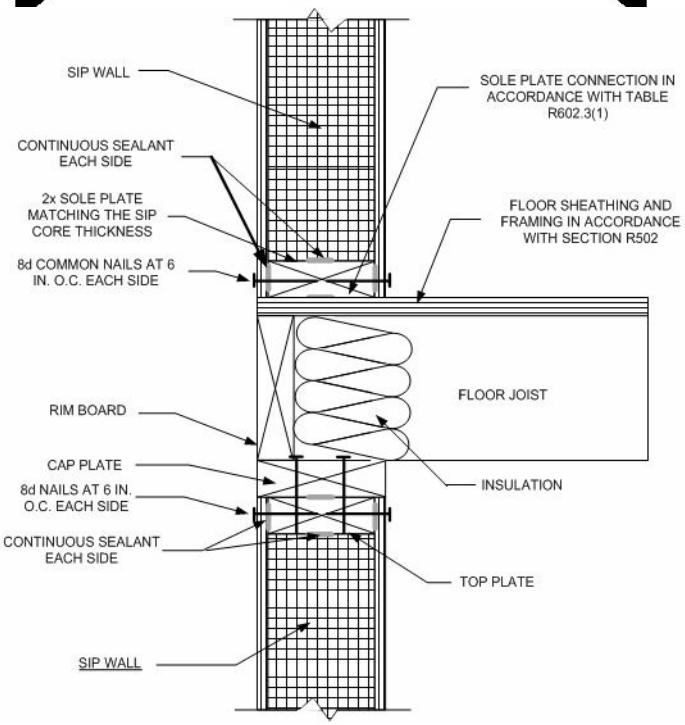

For SI: 1 inch = 25.4 mm.

Note:Figures illustrate SIP-specific attachment requirements. Other connections shall be made in accordance with Tables R602.3(1) and (2), as appropriate.

FIGURE R610.5 (5)

SIP WALL-TO-WALL ~~BALLOON~~ <u>HANGING FLOOR</u> FRAME CONNECTION (I-Joist floor shown for Illustration only)

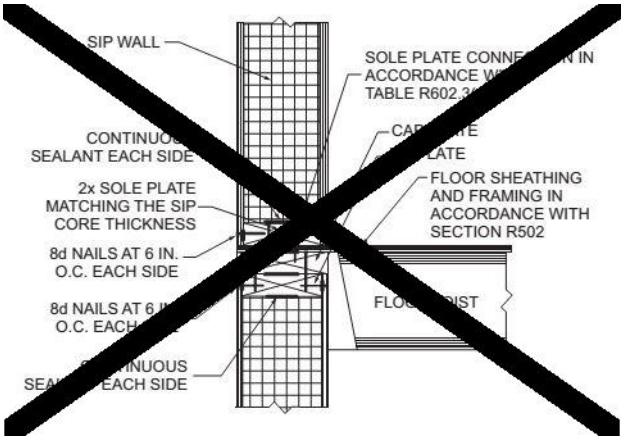

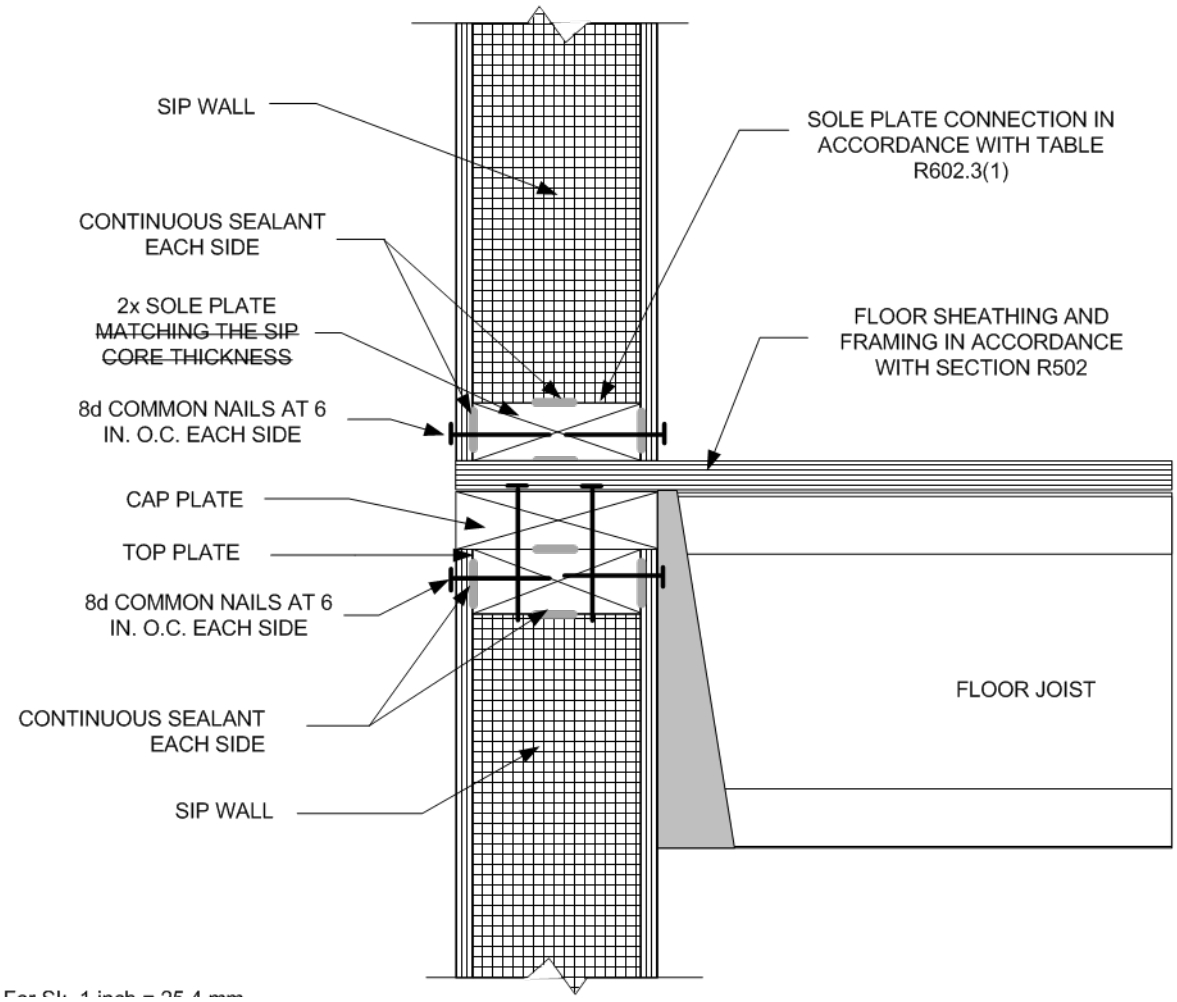

FIGURE R610.5.1
SIP WALL FRAMING CONFIGURATION

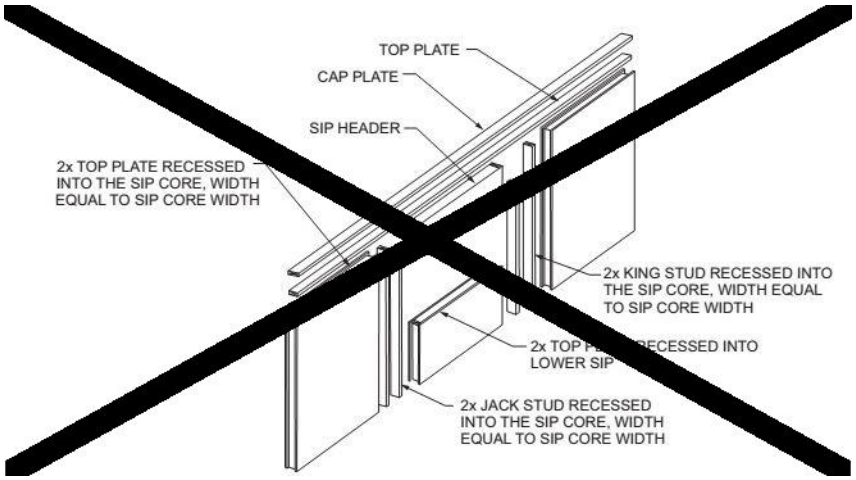

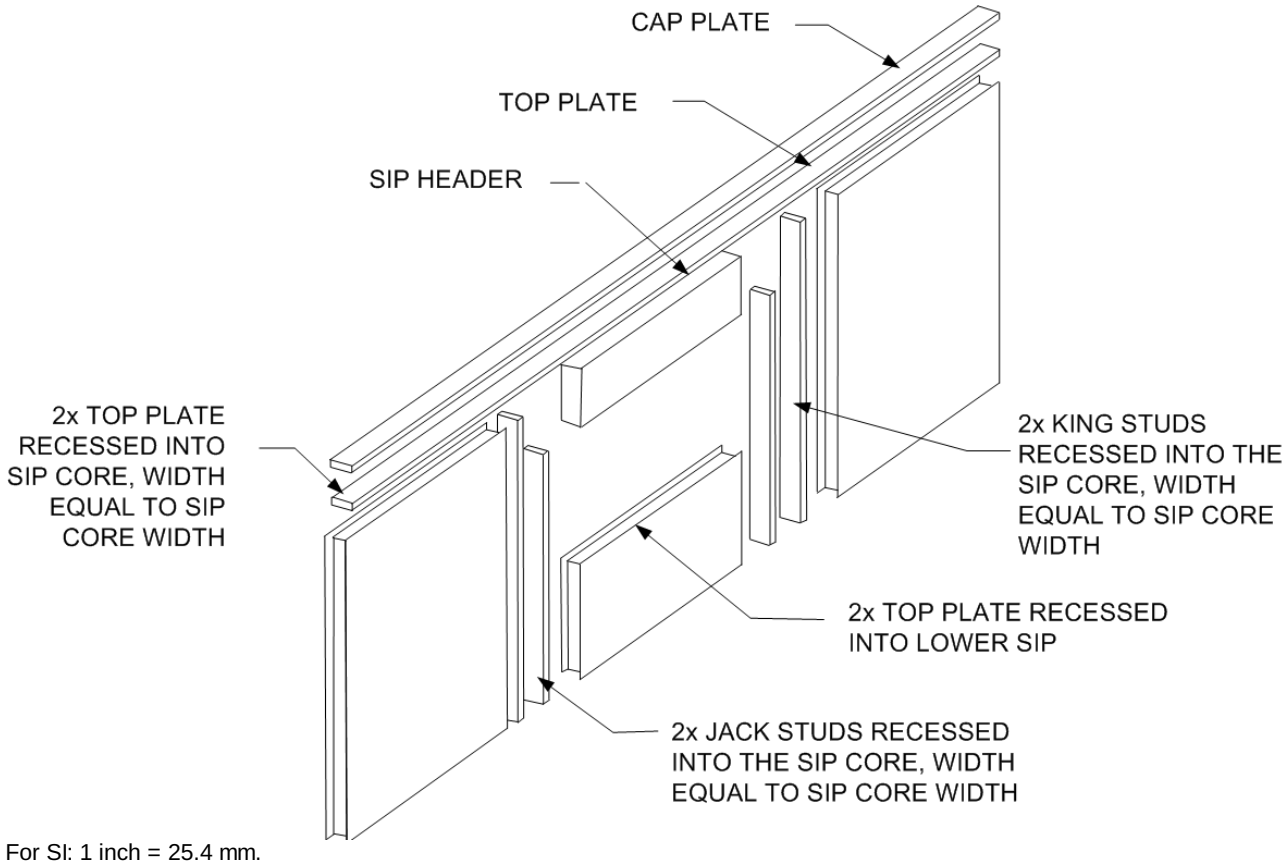

For SI: 1 inch = 25.4 mm.

Notes:

1. Top plates shall be continuous over header.

2. Lower 2x top plate shall have a width equal to the SIP core width and shall be recessed into the top edge of the panel. Cap plate shall be placed over the recessed top plate and shall have a width equal to the SIPs width.

3. SIP facing surfaces shall be nailed to framing and cripples with 8d common or galvanized box nails spaced 6 inches on center.

~~4. Galvanized nails shall be hot-dipped or tumbled. Framing shall be attached in accordance to Section R602.3(1) unless otherwise provide for in Section R610.~~

FIGURE R610.5.2
SIP WALL TO CONCRETE SLAB FOR FOUNDATION WALL ATTACHMENT

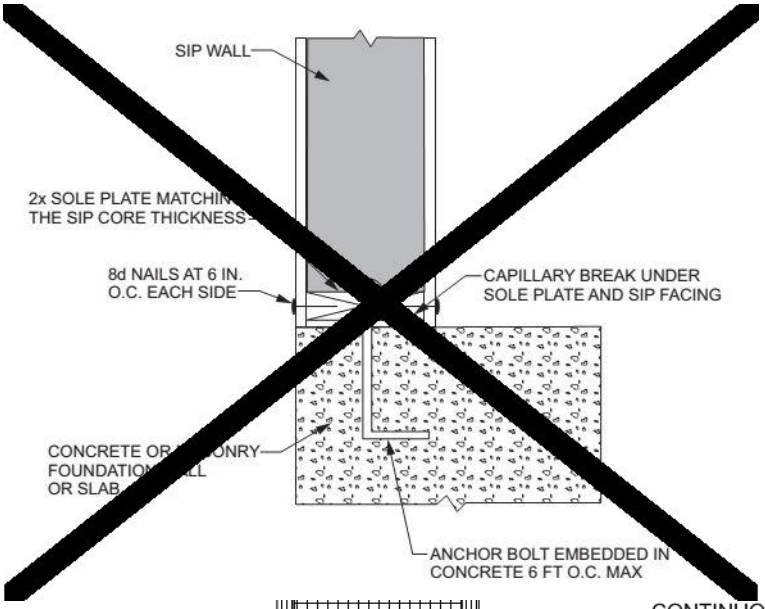

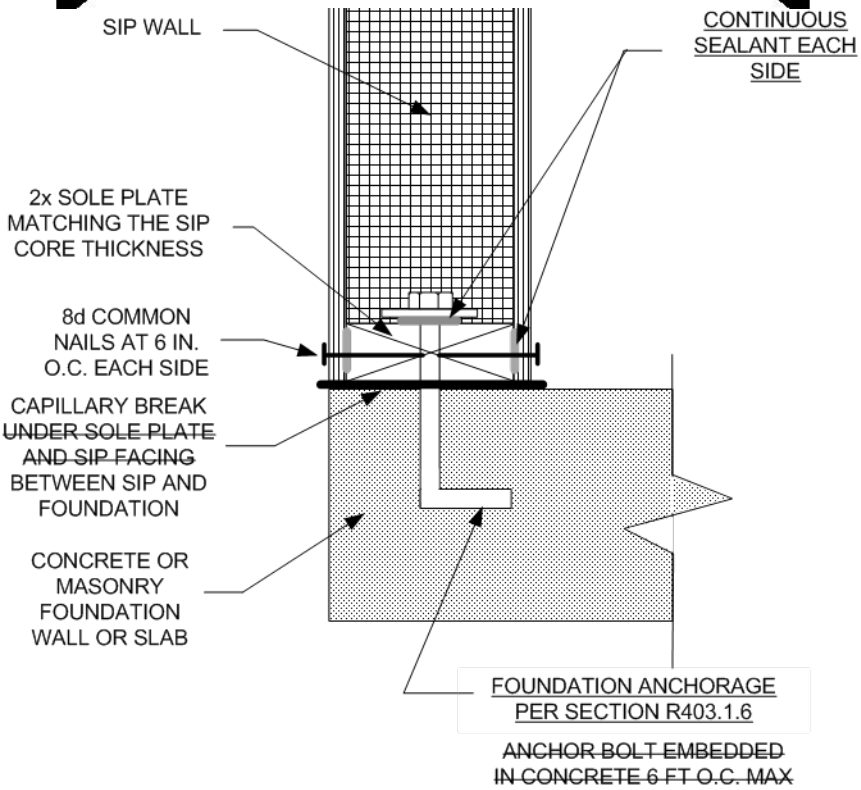

For SI: 1 inch = 25.4 mm, 1 foot = 304.8 mm.

Add new text as follows:

R610.5.3 Panel to panel connection. SIPs shall be connected at vertical in-plane joints in accordance with Figure R610.8 or by other approved methods.

R610.5.4 Corner framing. Corner framing of SIP walls shall be constructed in accordance with Figure R610.9.

Revise as follows:

~~R610.5.3~~ R610.5.5 Wall bracing. SIP walls shall be braced in accordance with Section R602.10. SIP walls shall be considered continuous wood structural panel sheathing (bracing Method CS-WSP) for purposes of computing required bracing. SIP walls shall meet the requirements of Section R602.10.4.2 except that SIP corners shall be fabricated as shown in Figure R610.9. Where SIP walls are used for wall bracing, the SIP bottom plate shall be attached to wood framing below in accordance with Table R602.3(1).

Add new text as follows:

R610.5.6 Thermal barrier. SIP walls shall be separated from the interior of a building by an approved thermal barrier in accordance with Section R316.4.

Delete without substitution:

~~**R610.8 Connection.** SIPs shall be connected at vertical in-plane joints in accordance with Figure R610.8 or by other *approved* methods.~~

Revise as follows:

~~**R610.10**~~ **R610.8 Headers.** SIP headers shall be designed and constructed in accordance with Table ~~R610.10~~ R610.8 and Figure R610.5.1. SIP headers shall be continuous sections without splines. Headers shall be not less than 11 7/8 inches (302 mm) deep. Headers longer than 4 feet (1219 mm) shall be constructed in accordance with Section R602.7. The strength axis of the facers on the header shall be oriented horizontally.

Delete and substitute as follows:

FIGURE R610.8
TYPICAL SIP WALL PANEL-TO-PANEL CONNECTION DETAILS ~~FOR VERTICAL IN-PLANE JOINTS~~

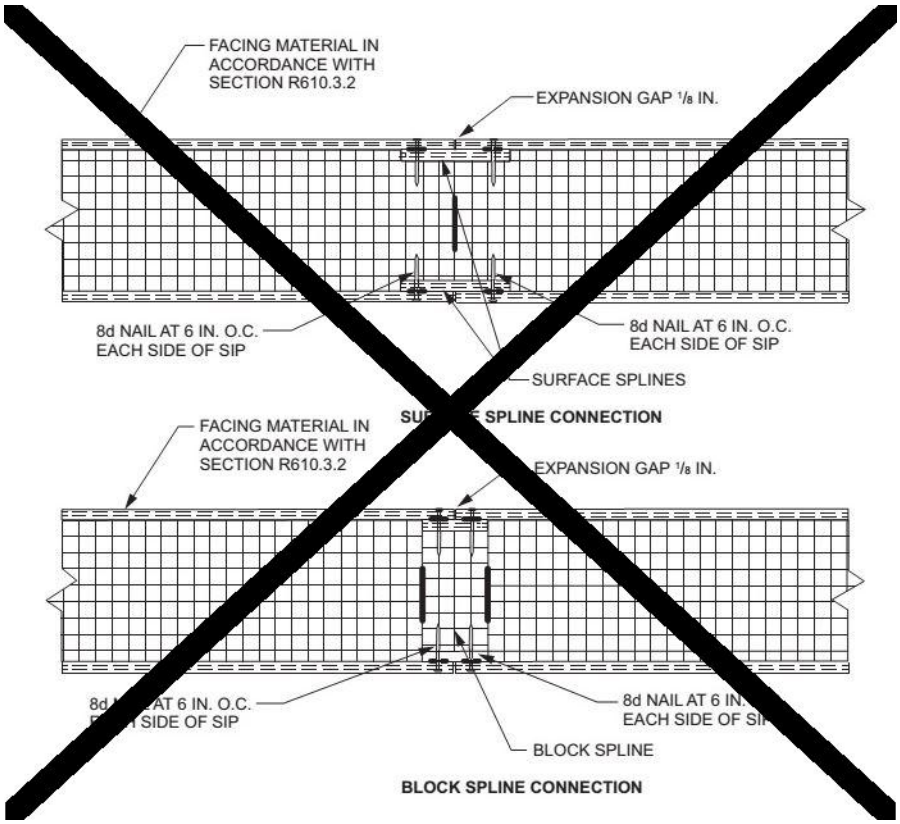

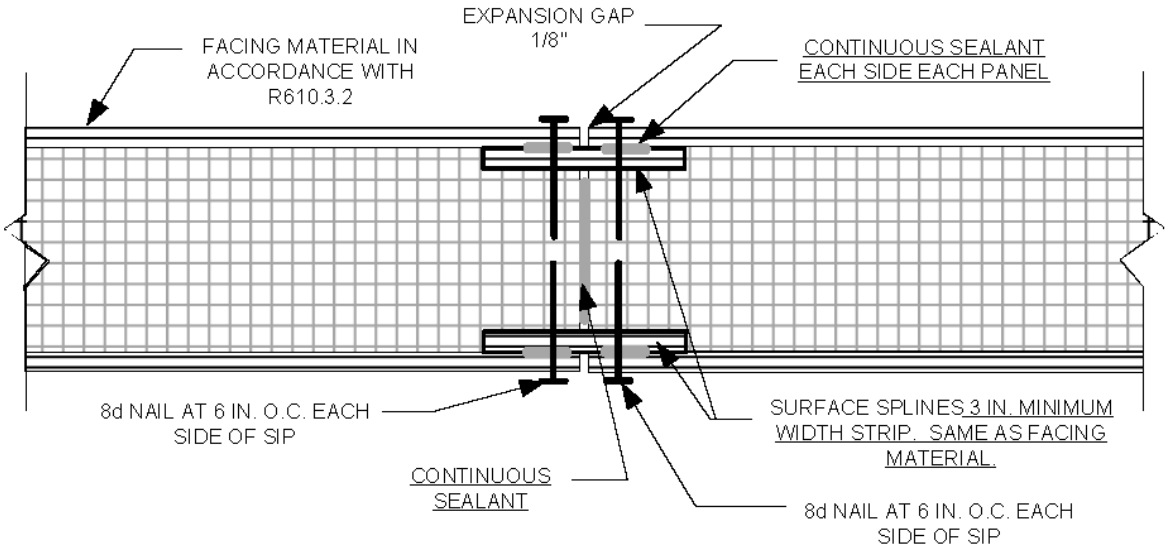

SURFACE SPLINE ~~CONNECTION~~

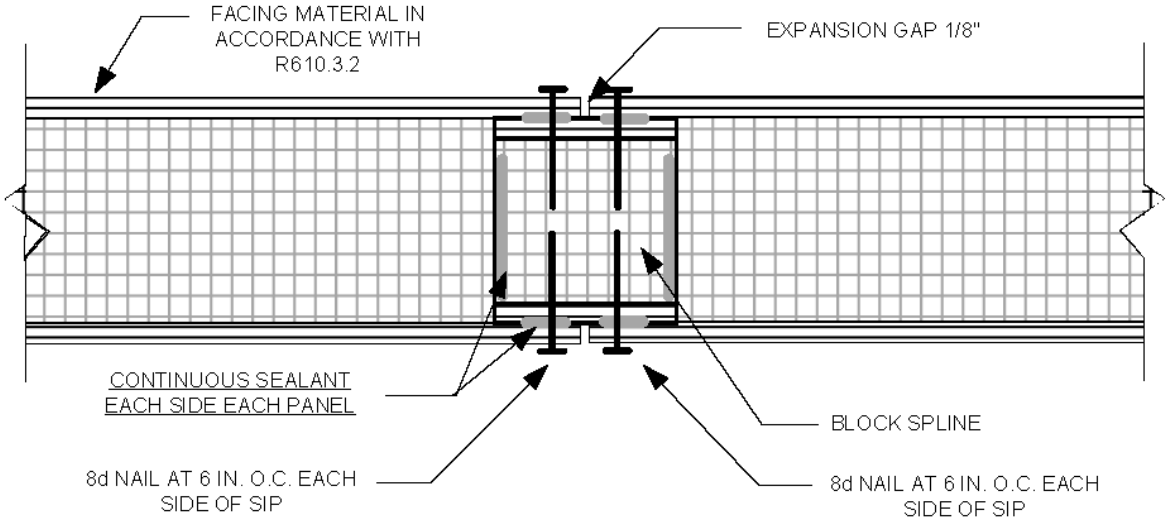

BLOCK SPLINE ~~CONNECTION~~

For SI: 1 inch = 25.4 mm.

TABLE ~~R610.10~~ R610.8
MAXIMUM SPANS FOR 11-7/8 ~~INCH DEEP~~ INCH OR DEEPER SIP HEADERS (feet)[a]

LOAD CONDITION	SNOW LOAD (psf)	BUILDING width (feet)				
		24	28	32	36	40
Supporting roof only	20	4	4	4	4	2
	30	4	4	4	2	2
	50	2	2	2	2	2
	70	2	2	2	~~N/A~~DR	~~N/A~~DR

Supporting roof and one-story	20	2	2	~~N/A~~DR	~~N/A~~DR	~~N/A~~DR
	30	2	2	~~N~~ADR	~~N/A~~DR	~~N/A~~DR
	50	2	~~N/A~~DR	~~N/A~~DR	~~N/A~~DR	~~N/A~~DR
	70	~~N/A~~DR	~~N/A~~DR	~~N/A~~DR	~~N/A~~DR	~~N/A~~DR

For SI: 1 inch = 25.4 mm, 1 foot = 304.8 mm, 1 pound per square foot = 0.0479 kPa.

~~N/A = Not Applicable.~~

a. Design assumptions:

Maximum deflection criterion: *L* /~~360~~ 240.

Maximum roof dead load: 10 psf.

Maximum ceiling load: 5 psf.
Maximum ceiling live load: 20 psf.

Maximum second-floor live load: 30 psf.

Maximum second-floor dead load: 10 psf.

Maximum second-floor dead load from walls: 10 psf.

Maximum first floor dead load: 10 psf.
Wind loads based on Table R301.2(2).
Strength axis of facing material applied horizontally.
DR = Design Required
b. Building width is in the direction of horizontal framing members supported by the header.
c. The table provides for roof slopes between 3:12 and 12:12.
d. The maximum roof overhang is 24 inches (610 mm).

Delete without substitution:

~~**R610.9 Corner framing.** Corner framing of SIP walls shall be constructed in accordance with Figure R610.9.~~

Delete and substitute as follows:

FIGURE R610.9
SIP CORNER FRAMING DETAIL

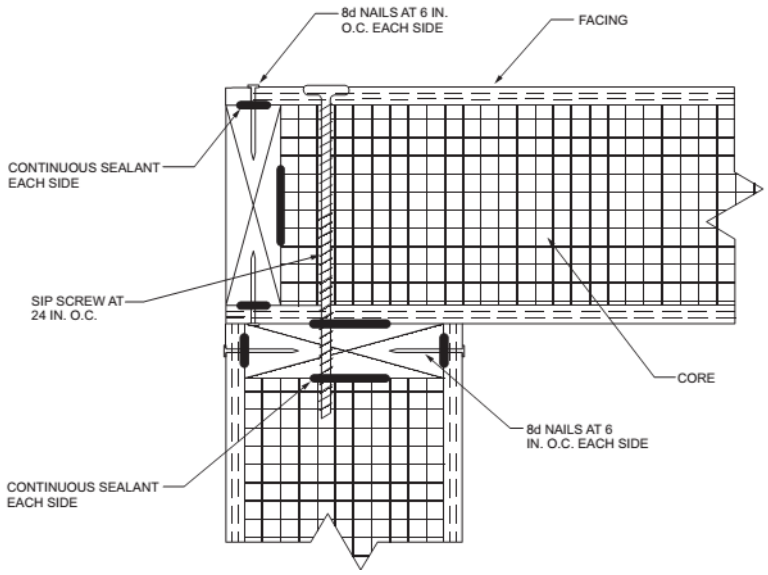

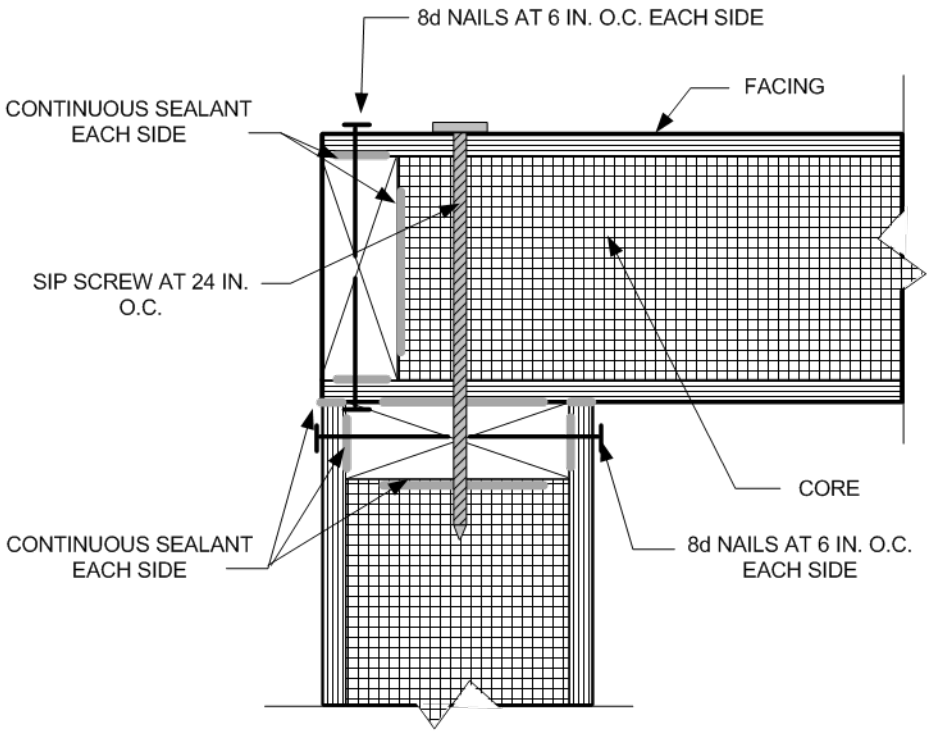

For SI: 1 inch = 25.4 mm.

Delete without substitution:

R610.3.1 Core. The core material shall be composed of foam plastic insulation meeting one of the following requirements:

1. ASTM C 578 and have a minimum density of 0.90 pounds per cubic feet (14.4 kg/m^3).
2. Polyurethane meeting the physical properties shown in Table R610.3.1.
3. An *approved* alternative.

All cores shall meet the requirements of Section R316.

Reference standards type: This reference standard is new to the ICC Code Books

Add new standard(s) as follows:

ANSI/APA PRS 610.1. Standard for Performance-Rated Structural Insulated Panels in Wall Applications.

Reason: The proposal is a minor reorganization and clarification of the Structural Insulated Panels (SIPs) section. The intention is to add clarity to the proposal as it is currently written. The original SIP language was based on the HUD document Prescriptive Method for Structural Insulated Panels (SIPs) Used in Wall Systems in Residential Construction. Since the inclusion of SIPs in the IRC, there have been several changes that have revised the SIP requirements. However, in some instances, the changes do not match the language used in other materials (wood, cold formed steel, etc.). Proposed changes are intended to bring the SIPs provisions more in line with the other sections of the IRC.

In addition, ANSI/APA PRS 610.1, Standard for Performance-Rated Structural Insulated Panels in Wall Applications, a consensus-based document is proposed for addition to the 2018 IRC. As a result, much of the detailed information currently in the IRC with respect to SIP core, facers and adhesive requirements may now be taken out of the IRC. (Free downloads of this new standard are available at http://www.apawood.org/registrationpop?pubID=f0e25ef1-d7fe-42e0-9e08-0291b94efb04)

To summarize the changes:

• Section R610.2 – added "square" to the snow load such that it reads "pounds per square foot". The SI conversion is correct as shown.

• Section R610.3.1 – Removes SIPs core details from the body of the code and references ANSI/APA PRS 610.1.

• Section R610.3.2 – Removes SIPs facer details from the body of the code and references ANSI/APA PRS 610.1.

• Section R610.3.3 – Removes SIPs adhesive details from the body of the code and references ANSI/APA PRS 610.1.

• New Section R610.3.4 - Adds thermal barrier requirements from the HUD document into Section R610. These requirements are in line with the requirements of IRC Section R316.4.

• Section R610.4.1 – The inspection and labeling requirements have been specified in ANSI/APA PRS 610.1, this section deleted.

• Sections R610.5.3 and R610.5.4 - Moved from current location in Section R610.8 and R610.9 respectively to proposed

location. This puts all of the connection details in one place. No technical changes made.
• Section R610.5.5 – Renumbered wall bracing provisions to accommodate proposed new locations for R610.5.3 and R610.5.4. Also added reference to bracing method CS-WSP to clarify bracing equivalence.
• Section R610.8 – Renumbered section and referenced tables and sections. No technical changes. Added a requirement that the strong axis of the header facers shall be placed in a horizontal orientation.
• Table R610.8 – Renumbered table and added clarifying language and additional footnotes to simplify use of the table. Corrected deflection criteria in footnotes.
• Figure R610.5(1) – Added reference to bottom wall connection for clarity.
• Figure R610.5(2) – Added reference to bottom wall connection for clarity. Clarified foundation annotation and corrected "FIRST STORY" annotation.
• Figure R610.5(3) – Removed gusset plate and reference. Modified callout for roof framing to include trusses and conventional roof framing. Added roof sheathing callout. Added cap-plate-to-top-plate connection requirement. Made adjustments to arrow heads to more clearly identify referenced portion.
• Figure R610.5(4) – Added "SIP Wall" callout to first story wall, and added an additional "Continuous Sealant" arrow at upper wall. Made adjustments to arrow heads to more clearly identify referenced portion.
• Figure R610.5(5) – Some editorial changes were made to callouts, arrow heads repositioned slightly to better indicate referenced portions. Title of figure changed to more accurately reflect figure.
• Figure R610.5.1 – Footnote 4 was removed as it is a duplicate of the requirements in the text. 'TOP PLATE" arrow moved to better identify recessed top plate.
• Figure R610.5.2 – Sealant added and referenced in new figure. Capillary break more clearly shown and anchor bolt requirement deleted and reference to Section R403.1.6 added.
• Figure R610.5.8 – Sealant was added to figure and a minimum splice plate size was provided. The figure title was changed to better describe figure and the term "connection" was removed from the figure sub-headings.
• Figure R610.5.9 – Additional arrows were added to the "Continuous Sealant" callout.

All figures have been redrawn and reformatted to provide a cleaner, more easily understood IRC.

Note that many of the changes requested above were placed before the committee last cycle. Some concerns about the minimum foam requirements were raised by the foam industry and subsequently the whole change was denied. The foam requirements as well as the material requirements for the wood structural panel and adhesive have all been included in the national consensus-based ANSI/APA PRS 610.1 standard. Just the editorial/clarification portions of the original proposal remain in this proposal.

We encourage the code body to accept this code change proposal providing requisite clarity.

Cost Impact: Will not increase the cost of construction
This proposal reorganizes the existing provisions, corrects typo errors in text and figures, and recognizes new consensus standards.

RB217-16 :
R602.1.11 (NEW)-
KEITH11187

Public Hearing Results

Committee Action: **Approved as Modified**

Modification:

~~**R610.3.1 Core.** The core material shall be composed of foam plastic insulation meeting one of the following requirements:~~

~~0.1.ASTM C 578 and have a minimum density of 0.90 pounds per cubic feet (14.4 kg/m^3).~~

~~0.1.Polyurethane meeting the physical properties shown in Table R610.3.1.~~

~~0.1.An *approved* alternative.~~

~~All cores shall meet the requirements of Section R316.~~

R610.5 Wall construction. Exterior walls of SIP construction shall be designed and constructed in accordance with the provisions of this section and Tables R610.5(1) and R610.5(2) and Figures R610.5(1) through R610.5(5). SIP walls shall be fastened to other wood building components in accordance with Tables R602.3(1) through R602.3(4).

Framing shall be attached in accordance with Table R602.3(1) unless otherwise provided for in Section R610.

FIGURE R610.5 (4)

SIP WALL-TO-WALL PLATFORM FRAME CONNECTION

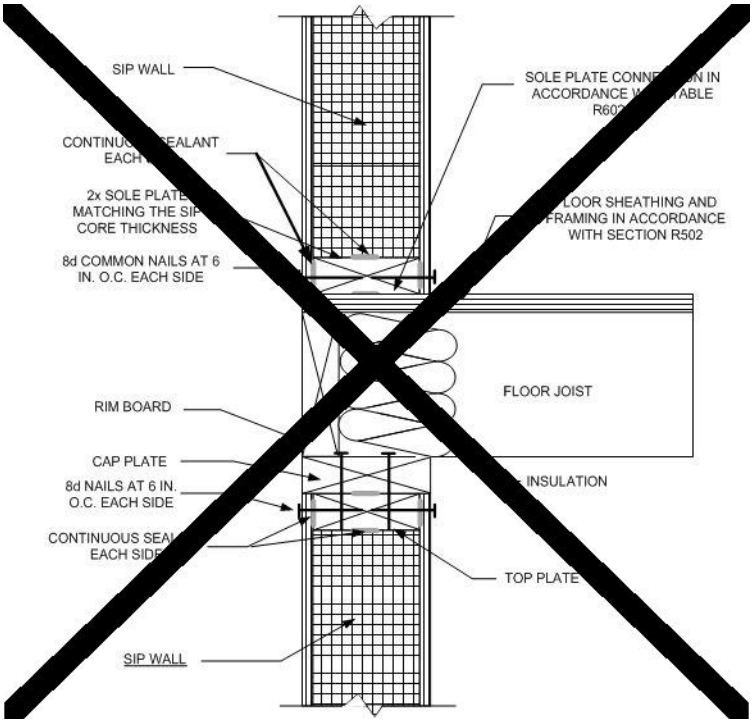

(Top portion of figure below cut off in monograph, see below)

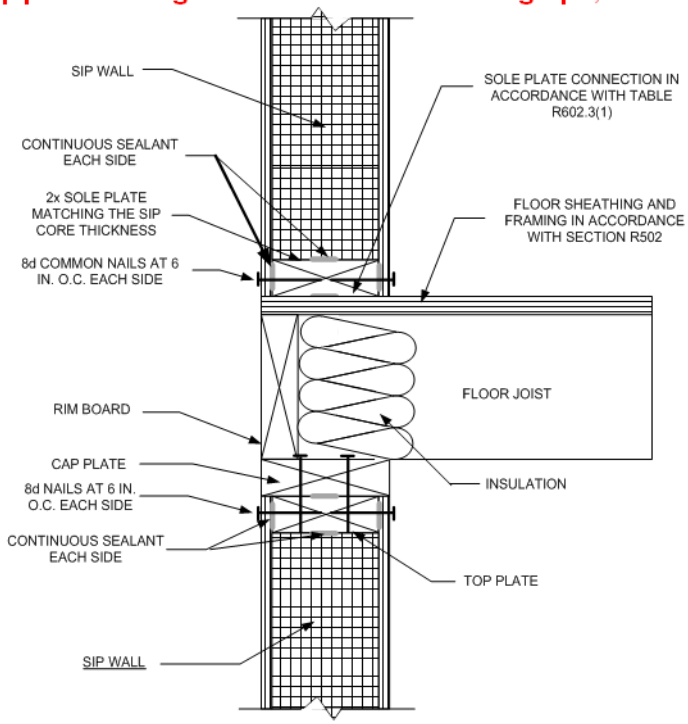

For SI: 1 inch = 25.4 mm.

Note :Figures illustrate SIP-specific attachment requirements. Other connections shall be made in accordance with Tables R602.3(1) and (2), as appropriate.

R610.5.1 Top plate connection. SIP walls shall be capped with a double top plate installed to provide overlapping at corner, intersections and splines in accordance with Figure R610.5.1. The double top plates shall be made up of a single 2 by top plate having a width equal to the width of the panel core, and shall be recessed into the SIP below. Over this top plate a cap plate shall be placed. The cap plate width shall match the SIP thickness and overlap the facers on both sides of the panel. End joints in top plates shall be offset not less than 24 inches (610 mm).

R610.5.2 Bottom (sole) plate connection. SIP walls shall have full bearing on a sole plate having a width equal to the nominal width of the foam core. Where SIP walls are supported directly on continuous foundations, the wall wood sill plate shall be

anchored to the foundation in accordance with Figure R610.5.2 and Section R403.1.

R610.6 Interior load-bearing walls. Interior load-bearing walls shall be constructed as specified for exterior walls.

R610.7 Drilling and notching. The maximum vertical chase penetration in SIPs shall have a maximum side dimension of 2 inches (51 mm) centered in the panel. Vertical chases shall have a minimum spacing of 24 inches (610 mm) on center. A maximum of two horizontal chases shall be permitted in each wall panel—one at 14 inches (360 mm) plus or minus 2 inches (51 mm) from the bottom of the panel and one at 48 inches (1220 mm) plus or minus 2 inches (51 mm) from the bottom edge of the SIPs panel. Additional penetrations are permitted where justified by analysis.

R610.10.1 Wood structural panel box headers. Wood structural panel box headers shall be allowed where SIP headers are not applicable. Wood structural panel box headers shall be constructed in accordance with Figure R602.7.3 and Table R602.7.3.

Committee Reason: The committee approved the proposal based on the proponents published reason statement. The proposal adds a new standard and clarifies and cleans up several sections of the SIPS requirements. The modification corrects several errors that occurred during the proposal submittal process.

Assembly Action: **None**

Individual Consideration Agenda

Public Comment 1:

Proponent : Edward Keith, representing APA- The Engineered Wood Association (ed.keith@apawood.org); Borjen Yeh (borjen.yeh@apawood.org) requests Approve as Modified by this Public Comment.

Further Modify as Follows:

2015 International Residential Code

R610.3 Materials. SIPs shall comply with the ~~following criteria:~~ requirements of ANSI/APA PRS 610.1.

Commenter's Reason: This Public Comment addresses Sections R610.3. Section R610.3 was inadvertently left out of the monograph. It references the new ANSI/APA standard for SIPs panels and is the justification for the removal of the core, facers, and adhesives tables from the code as these are covered in the standard. We are asking the code body to approve the editorial change R610.3 and ask for a vote of Approved as modified by the Public Comment.

RB217-16

RB223-16
IRC: R602.3.2.

Proposed Change as Submitted

Proponent : Edward Keith, representing APA- The Engineered Wood Association (ed.keith@apawood.org)

2015 International Residential Code

CHAPTER 6 WALL CONSTRUCTION

TABLE R602.3.2
SINGLE TOP-PLATE SPLICE CONNECTION DETAILS

CONDITION	TOP-PLATE SPLICE LOCATION			
	Corners and intersecting walls		Butt joints in straight walls	
	Splice plate size	Minimum nails each side of joint	Splice plate size	Minimum nails each side of joint
Structures in SDC A-C; and in SDC D_0 , D_1 and D_2 with braced wall line spacing less than 25 feet	3″ × 6″ × 0.036″ galvanized steel plate or equivalent	(6) 8d box ($2^1/_2$ ″ × 0.113″) nails	~~3′~~3" × 12″ ×0.036″ galvanized steel plate or equivalent	(12) 8d box ($2^1/_2$ ″ × 0.113″) nails
			Minimum 2 x 4 length sized to prevent splitting of splice or top plate	See Table R602.3(1), item 11
Structures in SDC D_0 , D_1 and D_2 , with braced wall line spacing greater than or equal to 25 feet	3″ × 8″ by 0.036″ galvanized steel plate or equivalent	(9) 8d box ($2^1/_2$ ″ × 0.113″) nails	~~3′3"~~ × 16″ × 0.036″ galvanized steel plate or equivalent	(18) 8d box ($2^1/_2$ ″ × 0.113″) nails
			-	

For SI: 1 inch = 25.4 mm, 1 foot = 304.8 mm.

Reason: This proposal provides a lumber splice plate option for the metal splice plate options already provided for single top plate splices. Note that the attachment details are referenced back to Table R602.3(1), Item 13. This proposal also corrects the typo made in the 2015 IRC concerning the width of the metal splice plate. Three INCHES is the appropriate width of the metal splice plate as can be seen in the column to the left in the same table.

Cost Impact: Will not increase the cost of construction
This change will not increase the cost of construction. It provides a lumber splice option to the metal splice options already in the IRC.

RB223-16 :
TABLE 602.3.2-
KEITH13186

Public Hearing Results

Committee Action: **Disapproved**

Committee Reason: The committee felt there are irregularities than need correcting such as the required length of the wood splice plate. The proponent should rework and bring this back as public comment.

Assembly Action: **None**

Individual Consideration Agenda

Public Comment 1:

Proponent : Edward Keith, APA - The Engineered Wood Association , representing APA- The Engineered Wood Association (ed.keith@apawood.org); Borjen Yeh (borjen.yeh@apawood.org) requests Approve as Modified by this Public Comment.

Replace Proposal as Follows:

TABLE R602.3.2
SINGLE TOP-PLATE SPLICE CONNECTION DETAILS

CONDITION	TOP-PLATE SPLICE LOCATION			
	Corners and intersecting walls		Butt joints in straight walls	
	Splice plate size	Minimum nails each side of joint	Splice plate size	Minimum nails each side of joint
Structures in SDC A-C; and in SDC D_0, D_1 and D_2 with braced wall line spacing less than 25 feet	3" x 6" x 0.036" galvanized steel plate or equivalent	(6) 8d box (2 1/2" x 0.113") nails	~~3'~~3" x 12" x 0.036" galvanized steel plate or equivalent	(12) 8d box (2 ½" x 0.113") nails
			Minimum 2" x 4" splice plate with the length sized to prevent splitting of splice or top plate	(8) 16d common (3 ½" x 0.162"); or (12) 16d box (3 ½" x 0.135"); or (12) 10d box (3" x 0.128"); or (12) 3" x 0.131" nails
Structures in SDC D_0, D_1 and D_2 with braced wall line spacing greater than or equal to 25 feet	3" x 8" x 0.036" galvanized steel plate or equivalent	(9) 8d box (2 1/2" x 0.113") nails	~~3'~~3" x 16" x 0.036" galvanized steel plate or equivalent	(18) 8d box (2 ½" x 0.113") nails
			Minimum 2" x 4" splice plate with the length sized to prevent splitting of splice or top plate	(12) 16d common (3 ½" x 0.162"); or (18) 16d box (3 ½" x 0.135"); or (18) 10d box (3" x 0.128"); or (18) 3" x 0.131" nails

Commenter's Reason: This public comment is intended to add a lumber splice option to the existing IRC table and address the issues discussed in the comments made at the Committ Action Hearing. The incorrect reference to Item 11 is deleted, and, just to make the table easier for the user, we replaced the reference to another table with the appropriate data from that table (this new addition is underlined above), thus saving the user from having to page back and forth throughout the code to arrive at an answer.
We request that the body overturn the Committee's recommendation for denial.

RB223-16

RB232-16

IRC: R602.10.3.

Proposed Change as Submitted

Proponent : Edward Keith, representing APA- The Engineered Wood Association (ed.keith@apawood.org)

2015 International Residential Code

Revise as follows:

TABLE R602.10.3(1)
BRACING REQUIREMENTS BASED ON WIND SPEED

· EXPOSURE CATEGORY B · 30-FOOT MEAN ROOF HEIGHT · 10-FOOT WALL HEIGHT · 2 BRACED WALL LINES			MINIMUM TOTAL LENGTH (FEET) OF BRACED WALL PANELS REQUIRED ALONG EACH BRACED WALL LINE[a,d]			
Ultimate Design Wind Speed (mph)	**Story Location**	**Braced Wall Line Spacing (feet)**	**Method LIB[b]**	**Method GB**	**Methods DWB, WSP, SFB, PBS, PCP, HPS, BV-WSP, ~~ABW,PFH, PFC,~~ CS-SFB[c]**	**Methods CS-WSP, CS-G, CS-PF**
≤110		10	3.5	3.5	2.0	1.5
		20	6.0	6.0	3.5	3.0
		30	8.5	8.5	5.0	4.5
		40	11.5	11.5	6.5	5.5
		50	14.0	14.0	8.0	7.0
		60	16.5	16.5	9.5	8.0
	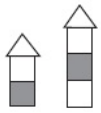	10	6.5	6.5	3.5	3.0
		20	11.5	11.5	6.5	5.5
		30	16.5	16.5	9.5	8.0
		40	21.5	21.5	12.5	10.5
		50	26.5	26.5	15.5	13.0
		60	31.5	31.5	18.0	15.5
		10	NP	9.5	5.5	4.5
		20	NP	17.0	10.0	8.5
		30	NP	24.5	14.0	12.0
		40	NP	32.0	18.5	15.5
		50	NP	39.5	22.5	19.0
		60	NP	46.5	26.5	23.0
≤ 115		10	3.5	3.5	2.0	2.0
		20	6.5	6.5	3.5	3.5
		30	9.5	9.5	5.5	4.5
		40	12.5	12.5	7.0	6.0
		50	15.0	15.0	9.0	7.5
		60	18.0	18.0	10.5	9.0
		10	7.0	7.0	4.0	3.5
		20	12.5	12.5	7.5	6.5
		30	18.0	18.0	10.5	9.0
		40	23.5	23.5	13.5	11.5
		50	29.0	29.0	16.5	14.0
		60	34.5	34.5	20.0	17.0
		10	NP	10.0	6.0	5.0
		20	NP	18.5	11.0	9.0
		30	NP	27.0	15.5	13.0
		40	NP	35.0	20.0	17.0
		50	NP	43.0	24.5	21.0
		60	NP	51.0	29.0	25.0

· EXPOSURE CATEGORY B · 30-FOOT MEAN ROOF HEIGHT · 10-FOOT WALL HEIGHT · 2 BRACED WALL LINES	MINIMUM TOTAL LENGTH (FEET) OF BRACED WALL PANELS REQUIRED ALONG EACH BRACED WALL LINE[a,d]

Ultimate Design Wind Speed (mph)	Story Location	Braced Wall Line Spacing (feet)	Method LIB[b]	Method GB	Methods DWB, WSP, SFB, PBS, PCP, HPS, BV-WSP, ~~ABW, PFH, PFG~~, CS-SFB[c]	Methods CS-WSP, CS-G, CS-PF
≤ 120	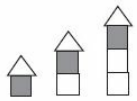	10	4.0	4.0	2.5	2.0
		20	7.0	7.0	4.0	3.5
		30	10.5	10.5	6.0	5.0
		40	13.5	13.5	8.0	6.5
		50	16.5	16.5	9.5	8.0
		60	19.5	19.5	11.5	9.5
	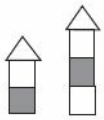	10	7.5	7.5	4.5	3.5
		20	14.0	14.0	8.0	7.0
		30	20.0	20.0	11.5	9.5
		40	25.5	25.5	15.0	12.5
		50	31.5	31.5	18.0	15.5
		60	37.5	37.5	21.5	18.5
	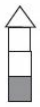	10	NP	11.0	6.5	5.5
		20	NP	20.5	11.5	10.0
		30	NP	29.0	17.0	14.5
		40	NP	38.0	22.0	18.5
		50	NP	47.0	27.0	23.0
		60	NP	55.5	32.0	27.0
≤130	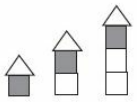	10	4.5	4.5	2.5	2.5
		20	8.5	8.5	5.0	4.0
		30	12.0	12.0	7.0	6.0
		40	15.5	15.5	9.0	7.5
		50	19.5	19.5	11.0	9.5
		60	23.0	23.0	13.0	11.0
	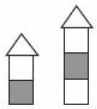	10	8.5	8.5	5.0	4.5
		20	16.0	16.0	9.5	8.0
		30	23.0	23.0	13.5	11.5
		40	30.0	30.0	17.5	15.0
		50	37.0	37.0	21.5	18.0
		60	44.0	44.0	25.0	21.5
		10	NP	13.0	7.5	6.5
		20	NP	24.0	13.5	11.5
		30	NP	34.5	19.5	17.0
		40	NP	44.5	25.5	22.0
		50	NP	55.0	31.5	26.5
		60	NP	65.0	37.5	31.5

· EXPOSURE CATEGORY B · 30-FOOT MEAN ROOF HEIGHT · 10-FOOT WALL HEIGHT · 2 BRACED WALL LINES			MINIMUM TOTAL LENGTH (FEET) OF BRACED WALL PANELS REQUIRED ALONG EACH BRACED WALL LINE[a,d]			
Ultimate Design Wind Speed (mph)	Story Location	Braced Wall Line Spacing (feet)	Method LIB[b]	Method GB	Methods DWB, WSP, SFB, PBS, PCP, HPS, BV-WSP, ~~ABW, PFH, PFG~~, CS-SFB[c]	Methods CS-WSP, CS-G, CS-PF
≤ 140	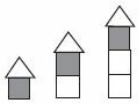	10	5.5	5.5	3.0	2.5
		20	10.0	10.0	5.5	5.0
		30	14.0	14.0	8.0	7.0
		40	18.0	18.0	10.5	9.0
		50	22.5	22.5	13.0	11.0
		60	26.5	26.5	15.0	13.0
	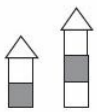	10	10.0	10.0	6.0	5.0
		20	18.5	18.5	11.0	9.0
		30	27.0	27.0	15.5	13.0
		40	35.0	35.0	20.0	17.0
		50	43.0	43.0	24.5	21.0
		60	51.0	51.0	29.0	25.0

		10	NP	15.0	8.5	7.5
		20	NP	27.5	16.0	13.5
		30	NP	39.5	23.0	19.5
		40	NP	51.5	29.5	25.0
		50	NP	63.5	36.5	31.0
		60	NP	75.5	43.0	36.5

For SI: 1 inch = 25.4 mm, 1 foot = 304.8 mm, 1 mile per hour = 0.447 m/s.

a. Linear interpolation shall be permitted.

b. Method LIB shall have gypsum board fastened to not less than one side with nails or screws in accordance with Table R602.3(1) for exterior sheathing or Table R702.3.5 for interior gypsum board. Spacing of fasteners at panel edges shall not exceed 8 inches.

c. Where a braced wall line has parallel braced wall lines on one or both sides of differing dimensions, the average dimension shall be permitted to be used for braced wall line spacing.

d. Methods ABW, PFH, and PFG may be used in conjunction with any bracing method permitted above and shall contribute to the amount of bracing assigned to that bracing method. When used alone in a braced wall line without any other bracing method, they shall be assigned the braced wall line lengths required for Method WSP.

Reason: Footnote (d) is proposed to cover the methods deleted from the table in the first part of the proposed code change. As the column headings are currently written, the table could be interpreted to mean that Methods ABW, PFH, and PFG can only be used in conjunction with the other methods listed in that column heading. This is not the intent of the code. Methods ABW, PFH, and PFG are narrow wall bracing methods and, as described in the text of the IRC, are permitted to be used with any bracing method. They contribute bracing to the required bracing length for the primary bracing method in the braced wall line where they are used.

In addition, all three of these methods were originally evaluated using Method WSP as the standard for comparison. Thus, when used by themselves in a braced wall line (For example, a garage section with a PFH on both sides of the garage door and no other bracing in the wall line.), the required bracing length is determined from the Method WSP column in Table R602.10.3(1).

Cost Impact: Will not increase the cost of construction
This code change will not increase the cost of construction. It clarifies the original intent of the code and is likely to save money in the long run as it makes misinterpreting the existing code less likely.

RB232-16 :
TABLE R602.10.3-
KEITH11129

Public Hearing Results

Committee Action: **Disapproved**

Committee Reason: The committee felt the deleted bracing methods should remain listed in the table. There is insufficient justification for removal of these bracing methods.

Assembly Action: **None**

Individual Consideration Agenda

Public Comment 1:

Proponent : Edward Keith, representing APA- The Engineered Wood Association (ed.keith@apawood.org); Borjen Yeh (borjen.yeh@apawood.org) requests Approve as Modified by this Public Comment.

Modify as Follows:

2015 International Residential Code

TABLE R602.10.3 (1)
BRACING REQUIREMENTS BASED ON WIND SPEED

· EXPOSURE CATEGORY B · 30-FOOT MEAN ROOF HEIGHT · 10-FOOT WALL HEIGHT · 2 BRACED WALL LINES			MINIMUM TOTAL LENGTH (FEET) OF BRACED WALL PANELS REQUIRED ALONG EACH BRACED WALL LINE[a,d]			
Ultimate Design Wind Speed (mph)	**Story Location**	**Braced Wall Line Spacing (feet)**	**Method LIB[b]**	**Method GB**	**Methods DWB, WSP, SFB, PBS, PCP, HPS, BV-WSP, ABW, PFH, PFG CS-SFB[c]**	**Methods CS-WSP, CS-G, CS-PF**
≤110		10	3.5	3.5	2.0	1.5
		20	6.0	6.0	3.5	3.0
		30	8.5	8.5	5.0	4.5
		40	11.5	11.5	6.5	5.5
		50	14.0	14.0	8.0	7.0
		60	16.5	16.5	9.5	8.0
	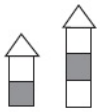	10	6.5	6.5	3.5	3.0
		20	11.5	11.5	6.5	5.5
		30	16.5	16.5	9.5	8.0
		40	21.5	21.5	12.5	10.5
		50	26.5	26.5	15.5	13.0
		60	31.5	31.5	18.0	15.5
	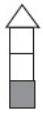	10	NP	9.5	5.5	4.5
		20	NP	17.0	10.0	8.5
		30	NP	24.5	14.0	12.0
		40	NP	32.0	18.5	15.5
		50	NP	39.5	22.5	19.0
		60	NP	46.5	26.5	23.0
≤ 115		10	3.5	3.5	2.0	2.0
		20	6.5	6.5	3.5	3.5
		30	9.5	9.5	5.5	4.5
		40	12.5	12.5	7.0	6.0
		50	15.0	15.0	9.0	7.5
		60	18.0	18.0	10.5	9.0
		10	7.0	7.0	4.0	3.5
		20	12.5	12.5	7.5	6.5
		30	18.0	18.0	10.5	9.0
		40	23.5	23.5	13.5	11.5
		50	29.0	29.0	16.5	14.0
		60	34.5	34.5	20.0	17.0
		10	NP	10.0	6.0	5.0
		20	NP	18.5	11.0	9.0
		30	NP	27.0	15.5	13.0
		40	NP	35.0	20.0	17.0
		50	NP	43.0	24.5	21.0
		60	NP	51.0	29.0	25.0

For SI: 1 inch = 25.4 mm, 1 foot = 304.8 mm, 1 mile per hour = 0.447 m/s.

a. Linear interpolation shall be permitted.

b. Method LIB shall have gypsum board fastened to not less than one side with nails or screws in accordance with Table R602.3(1) for exterior sheathing or Table R702.3.5 for interior gypsum board. Spacing of fasteners at panel edges shall not exceed 8 inches.

c. Where a braced wall line has parallel braced wall lines on one or both sides of differing dimensions, the average dimension shall be permitted to be used for braced wall line spacing.

d. Methods ABW, PFH, and PFG may be used in conjunction with any bracing method permitted above and shall contribute to the amount of bracing assigned to that bracing method. When used alone in a braced wall line without any other bracing method, they shall be assigned the braced wall line lengths required for Method WSP.

Commenter's Reason: Methods ABW, PFH, and PFG are narrow/portal frame bracing methods and, as described in the text of the IRC, are permitted to be used with any bracing method. They contribute bracing to the required bracing length for the primary bracing method in the braced wall line where they are used.

I had originally thought that removing Methods ABW, PFH, and PFG from the table heading and putting them in the Footnotes, along with the clarification of the footnote, would clarify the proper use of the three narrow/portal frame methods. Based on comments from the Committee Action Hearing, Methods ABW, PFH, and PFG have been restored to the table heading in this Public Comment.

I ask you to please overturn the Committee's recommendation for denial and to approve the Public Comment.

Public Comment 2:

Proponent : Randy Shackelford, Simpson Strong-Tie Co., representing Simpson Strong-Tie (rshackelford@strongtie.com) requests Approve as Modified by this Public Comment.

Modify as Follows:

2015 International Residential Code

TABLE R602.10.3 (1)
BRACING REQUIREMENTS BASED ON WIND SPEED

· EXPOSURE CATEGORY B · 30-FOOT MEAN ROOF HEIGHT · 10-FOOT WALL HEIGHT · 2 BRACED WALL LINES			MINIMUM TOTAL LENGTH (FEET) OF BRACED WALL PANELS REQUIRED ALONG EACH BRACED WALL LINE[a,d]			
Ultimate Design Wind Speed (mph)	**Story Location**	**Braced Wall Line Spacing (feet)**	**Method LIB[b]**	**Method GB**	**Methods DWB, WSP, SFB, PBS, PCP, HPS, BV-WSP, ABW, PFH, PFG, CS-SFB[c]**	**Methods CS-WSP, CS-G, CS-PF**
≤110		10	3.5	3.5	2.0	1.5
		20	6.0	6.0	3.5	3.0
		30	8.5	8.5	5.0	4.5
		40	11.5	11.5	6.5	5.5
		50	14.0	14.0	8.0	7.0
		60	16.5	16.5	9.5	8.0
	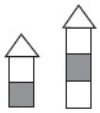	10	6.5	6.5	3.5	3.0
		20	11.5	11.5	6.5	5.5
		30	16.5	16.5	9.5	8.0
		40	21.5	21.5	12.5	10.5
		50	26.5	26.5	15.5	13.0
		60	31.5	31.5	18.0	15.5
		10	NP	9.5	5.5	4.5
		20	NP	17.0	10.0	8.5
		30	NP	24.5	14.0	12.0
		40	NP	32.0	18.5	15.5
		50	NP	39.5	22.5	19.0
		60	NP	46.5	26.5	23.0
≤ 115		10	3.5	3.5	2.0	2.0
		20	6.5	6.5	3.5	3.5
		30	9.5	9.5	5.5	4.5
		40	12.5	12.5	7.0	6.0
		50	15.0	15.0	9.0	7.5
		60	18.0	18.0	10.5	9.0
		10	7.0	7.0	4.0	3.5
		20	12.5	12.5	7.5	6.5
		30	18.0	18.0	10.5	9.0
		40	23.5	23.5	13.5	11.5
		50	29.0	29.0	16.5	14.0
		60	34.5	34.5	20.0	17.0

		10	NP	10.0	6.0	5.0
		20	NP	18.5	11.0	9.0
		30	NP	27.0	15.5	13.0
		40	NP	35.0	20.0	17.0
		50	NP	43.0	24.5	21.0
		60	NP	51.0	29.0	25.0

· EXPOSURE CATEGORY B · 30-FOOT MEAN ROOF HEIGHT · 10-FOOT WALL HEIGHT · 2 BRACED WALL LINES			MINIMUM TOTAL LENGTH (FEET) OF BRACED WALL PANELS REQUIRED ALONG EACH BRACED WALL LINE[a,d]			
Ultimate Design Wind Speed (mph)	**Story Location**	**Braced Wall Line Spacing (feet)**	**Method LIB[b]**	**Method GB**	**Methods DWB, WSP, SFB, PBS, PCP, HPS, BV-WSP, ABW, PFH, PFG, CS-SFB[c]**	**Methods CS-WSP, CS-G, CS-PF**
≤ 120	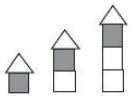	10	4.0	4.0	2.5	2.0
		20	7.0	7.0	4.0	3.5
		30	10.5	10.5	6.0	5.0
		40	13.5	13.5	8.0	6.5
		50	16.5	16.5	9.5	8.0
		60	19.5	19.5	11.5	9.5
	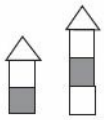	10	7.5	7.5	4.5	3.5
		20	14.0	14.0	8.0	7.0
		30	20.0	20.0	11.5	9.5
		40	25.5	25.5	15.0	12.5
		50	31.5	31.5	18.0	15.5
		60	37.5	37.5	21.5	18.5
	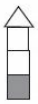	10	NP	11.0	6.5	5.5
		20	NP	20.5	11.5	10.0
		30	NP	29.0	17.0	14.5
		40	NP	38.0	22.0	18.5
		50	NP	47.0	27.0	23.0
		60	NP	55.5	32.0	27.0
≤130	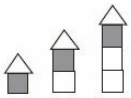	10	4.5	4.5	2.5	2.5
		20	8.5	8.5	5.0	4.0
		30	12.0	12.0	7.0	6.0
		40	15.5	15.5	9.0	7.5
		50	19.5	19.5	11.0	9.5
		60	23.0	23.0	13.0	11.0
	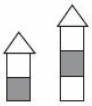	10	8.5	8.5	5.0	4.5
		20	16.0	16.0	9.5	8.0
		30	23.0	23.0	13.5	11.5
		40	30.0	30.0	17.5	15.0
		50	37.0	37.0	21.5	18.0
		60	44.0	44.0	25.0	21.5
		10	NP	13.0	7.5	6.5
		20	NP	24.0	13.5	11.5
		30	NP	34.5	19.5	17.0
		40	NP	44.5	25.5	22.0
		50	NP	55.0	31.5	26.5
		60	NP	65.0	37.5	31.5

· EXPOSURE CATEGORY B · 30-FOOT MEAN ROOF HEIGHT · 10-FOOT WALL HEIGHT · 2 BRACED WALL LINES	MINIMUM TOTAL LENGTH (FEET) OF BRACED WALL PANELS REQUIRED ALONG EACH BRACED WALL LINE[a,d]

Ultimate Design Wind Speed (mph)	Story Location	Braced Wall Line Spacing (feet)	Method LIB[b]	Method GB	Methods DWB, WSP, SFB, PBS, PCP, HPS, BV-WSP, ABW, PFH, PFG, CS-SFB[c]	Methods CS-WSP, CS-G, CS-PF
≤ 140	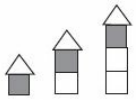	10	5.5	5.5	3.0	2.5
		20	10.0	10.0	5.5	5.0
		30	14.0	14.0	8.0	7.0
		40	18.0	18.0	10.5	9.0
		50	22.5	22.5	13.0	11.0
		60	26.5	26.5	15.0	13.0
	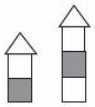	10	10.0	10.0	6.0	5.0
		20	18.5	18.5	11.0	9.0
		30	27.0	27.0	15.5	13.0
		40	35.0	35.0	20.0	17.0
		50	43.0	43.0	24.5	21.0
		60	51.0	51.0	29.0	25.0
	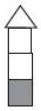	10	NP	15.0	8.5	7.5
		20	NP	27.5	16.0	13.5
		30	NP	39.5	23.0	19.5
		40	NP	51.5	29.5	25.0
		50	NP	63.5	36.5	31.0
		60	NP	75.5	43.0	36.5

For SI: 1 inch = 25.4 mm, 1 foot = 304.8 mm, 1 mile per hour = 0.447 m/s.

a. Linear interpolation shall be permitted.

b. Method LIB shall have gypsum board fastened to not less than one side with nails or screws in accordance with Table R602.3(1) for exterior sheathing or Table R702.3.5 for interior gypsum board. Spacing of fasteners at panel edges shall not exceed 8 inches.

c. Where a braced wall line has parallel braced wall lines on one or both sides of differing dimensions, the average dimension shall be permitted to be used for braced wall line spacing.

d. ~~Methods ABW, PFH, and PFG may be used in conjunction with any~~ When more than one bracing method ~~permitted above and shall contribute to the amount~~ is used, mixing of ~~bracing assigned to that bracing method. When used alone in a braced wall line without any other bracing method, they~~ methods shall be ~~assigned the braced wall line lengths required for Method WSP~~ in accordance with Section R602.10.4.1.

R602.10.4.1 Mixing methods. Mixing of bracing methods shall be permitted as follows:

1. Mixing intermittent bracing and continuous sheathing methods from story to story shall be permitted.
2. Mixing intermittent bracing methods from *braced wall line* to *braced wall line* within a story shall be permitted. In regions within Seismic Design Categories A, B and C where the ultimate design wind speed is less than or equal to 130 mph (58m/s), mixing of intermittent bracing and continuous sheathing methods from braced wall line to braced wall line within a story shall be permitted.
3. Mixing intermittent bracing methods along a *braced wall line* shall be permitted in Seismic Design Categories A and B, and detached dwellings in Seismic Design Category C, provided the length of required bracing is determined in accordance with Table R602.10.3(1) or R602.10.3(3) ~~is~~ using the highest value of all intermittent bracing methods used.
4. Mixing of continuous sheathing methods CS-WSP, CS-G and CS-PF along a *braced wall line* shall be permitted. Intermittent methods ABW, PFH and PFG shall be permitted to be used along a *braced wall line* with continuous sheathed methods, provided the length of required bracing for that braced wall line is determined in accordance with Table R602.10.3(1) or R602.10.3(3) using the highest value of the bracing methods used.
5. In Seismic Design Categories A and B, and for detached one- and two-family dwellings in Seismic Design Category C, mixing of intermittent bracing methods along the interior portion of a *braced wall line* with continuous sheathing methods CS-WSP, CS-G and CS-PF along the exterior portion of the same braced wall line shall be permitted. The length of required bracing shall be the highest value of all intermittent bracing methods used in accordance with Table R602.10.3(1) or R602.10.3(3) as adjusted by Tables R602.10.3(2) and R602.10.3(4), respectively. The requirements of Section R602.10.7 shall apply to each end of the continuously sheathed portion of the braced wall line.

Commenter's Reason: This change is not really needed, and we thought the Committee was correct to Disapprove it as it was originally written.

We think it is important that all bracing methods be shown in the column heading of the Tables. Not showing certain methods seems to minimize their importance and their opportunity for use. Further, Section R602.10.4 already very clearly spells out which bracing methods can be combined and when.

However, if the original proponent feels that there is confusion in the current table, we offer this solution to clarify when the various bracing methods can be combined. We have proposed to not delete any bracing methods from the column heading of the table. Then we revise the footnote to point out to the code user that the methods can be combined as long as the requirements of Section R602.10.4 are met.

In writing this Public Comment, we did notice one area of Section R602,10.4.1 which could use improving. That is the case covered by this proposal, when Intermittent ABW's or Portal Frames are mixed with Continuous Methods. The issue is that the Intermittent ABW's or Portal Frames have their length of bracing based on the intermittent WSP method, as stated by the proponent. The continuous methods require a shorter length of bracing because their basis is assumed to be stronger. If the intermittent narrow methods are combined with the continuous methods and the bracing lengths are based on the continuous method, there will be insufficient amount of bracing. So a method is proposed that is exactly the same as used in paragraphs #3 above and #5 below this one, where the bracing amount has to be based on the weaker method.

So if you agree with us, we ask you to consider voting approved as modified by this proposal.

RB232-16

RB235-16

IRC: R602.10.3.

Proposed Change as Submitted

Proponent : Edward Keith, representing APA- The Engineered Wood Association (ed.keith@apawood.org)

2015 International Residential Code

TABLE R602.10.3 (3)
BRACING REQUIREMENTS BASED ON SEISMIC DESIGN CATEGORY

· SOIL CLASS D[b] · WALL HEIGHT = 10 FEET · 10 PSF FLOOR DEAD LOAD · 15 PSF ROOF/CEILING DEAD LOAD · BRACED WALL LINE SPACING ≤ 25 FEET			MINIMUM TOTAL LENGTH (FEET) OF BRACED WALL PANELS REQUIRED ALONG EACH BRACED WALL LINE[a,f]				
Seismic Design Category	**Story Location**	**Braced Wall Line Length (feet)[c]**	**Method LIB[d]**	**Method GB**	**Methods DWB, SFB, PBS, PCP, HPS, CS-SFB[e]**	**Method WSP**	**Methods CS-WSP, CS-G, CS-PF**
C (townhouses only)	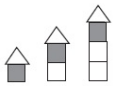	10	2.5	2.5	2.5	1.6	1.4
		20	5.0	5.0	5.0	3.2	2.7
		30	7.5	7.5	7.5	4.8	4.1
		40	10.0	10.0	10.0	6.4	5.4
		50	12.5	12.5	12.5	8.0	6.8
	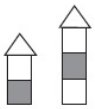	10	NP	4.5	4.5	3.0	2.6
		20	NP	9.0	9.0	6.0	5.1
		30	NP	13.5	13.5	9.0	7.7
		40	NP	18.0	18.0	12.0	10.2
		50	NP	22.5	22.5	15.0	12.8
		10	NP	6.0	6.0	4.5	3.8
		20	NP	12.0	12.0	9.0	7.7
		30	NP	18.0	18.0	13.5	11.5
		40	NP	24.0	24.0	18.0	15.3
		50	NP	30.0	30.0	22.5	19.1
D_0		10	NP	2.8	2.8	1.8	1.6
		20	NP	5.5	5.5	3.6	3.1
		30	NP	8.3	8.3	5.4	4.6
		40	NP	11.0	11.0	7.2	6.1
		50	NP	13.8	13.8	9.0	7.7
	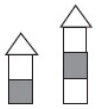	10	NP	5.3	5.3	3.8	3.2
		20	NP	10.5	10.5	7.5	6.4
		30	NP	15.8	15.8	11.3	9.6
		40	NP	21.0	21.0	15.0	12.8
		50	NP	26.3	26.3	18.8	16.0
		10	NP	7.3	7.3	5.3	4.5
		20	NP	14.5	14.5	10.5	9.0
		30	NP	21.8	21.8	15.8	13.4
		40	NP	29.0	29.0	21.0	17.9
		50	NP	36.3	36.3	26.3	22.3

For SI: 1 inch = 25.4 mm, 1 foot = 304.8 mm, 1 pound per square foot = 0.0479 kPa.

a. Linear interpolation shall be permitted.

b. Wall bracing lengths are based on a soil site class "D." Interpolation of bracing length between the S_{ds} values associated with the seismic design categories shall be permitted when a site-specific S_{ds} value is determined in accordance with Section 1613.3 of the *International Building Code* .

c. Where the braced wall line length is greater than 50 feet, braced wall lines shall be permitted to be divided into shorter segments having lengths of 50 feet or less, and the amount of bracing within each segment shall be in accordance with this table.

d. Method LIB shall have gypsum board fastened to not less than one side with nails or screws in accordance with Table R602.3(1) for exterior sheathing or Table R702.3.5 for interior gypsum board. Spacing of fasteners at panel edges shall not exceed 8 inches.

e. Method CS-SFB does not apply in Seismic Design Categories D_0, D_1 and D_2.

f. Methods ABW, PFH, and PFG may be used in conjunction with any bracing method permitted above and shall contribute to the amount of bracing assigned to that bracing method. When used alone in a braced wall line without any other bracing method, they shall be assigned the braced wall line lengths provided for Method WSP.

Reason: As the bracing methods added to the column heading and the proposed footnote are missing in the current Table R602.10.3(3), it could be construed that these methods are not permitted for resisting seismic forces. This is not the case, nor the intent of the existing table.
As Method CS-PF is permitted only in walls that are continuously sheathed, it is added to the right-hand most column where the other continuously sheathed methods are found.

Footnote (f) is proposed to add the remaining missing methods to the table. Methods ABW, PFH, and PFG are narrow wall bracing methods and, as described in the text of the IRC, are permitted to be used with any bracing method. They contribute bracing to the required bracing length for the primary bracing method in the braced wall line where they are used.

In addition, all three of the methods addressed in the footnote were originally evaluated using Method WSP as the standard of comparison. Thus, when used by themselves in a braced wall line (For example, a garage section with a PFH on both sides of the garage door and no other bracing in the wall line.), the required bracing length is determined from the Method WSP column in Table R602.10.3(3).

Cost Impact: Will not increase the cost of construction
This code change will not increase the cost of construction. It clarifies the original intent of the code and is likely to save money in the long run as it makes misinterpreting the existing code less likely.
.

RB235-16 :
TABLE R602.10.3-
KEITH11137

Public Hearing Results

Committee Action: **Approved as Submitted**

Committee Reason: The committee felt this change added important bracing methods into the table and expands the available options.

Assembly Action: **None**

Individual Consideration Agenda

Public Comment 1:

Proponent : Edward Keith, representing APA- The Engineered Wood Association (ed.keith@apawood.org) requests Approve as Modified by this Public Comment.

Modify as Follows:

2015 International Residential Code

TABLE R602.10.3 (3)
BRACING REQUIREMENTS BASED ON SEISMIC DESIGN CATEGORY

· SOIL CLASS D[b] · WALL HEIGHT = 10 FEET · 10 PSF FLOOR DEAD LOAD · 15 PSF ROOF/CEILING DEAD LOAD · BRACED WALL LINE SPACING ≤ 25 FEET			MINIMUM TOTAL LENGTH (FEET) OF BRACED WALL PANELS REQUIRED ALONG EACH BRACED WALL LINE[a,f]				
Seismic Design Category	**Story Location**	**Braced Wall Line Length (feet)[c]**	**Method LIB[d]**	**Method GB**	**Methods DWB, SFB, PBS, PCP, HPS, ABW, PFH, PFG CS-SFB[e]**	**Method WSP**	**Methods CS-WSP, CS-G, CS-PF**
C (townhouses only)	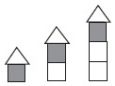	10	2.5	2.5	2.5	1.6	1.4
		20	5.0	5.0	5.0	3.2	2.7
		30	7.5	7.5	7.5	4.8	4.1
		40	10.0	10.0	10.0	6.4	5.4
		50	12.5	12.5	12.5	8.0	6.8
	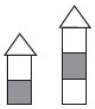	10	NP	4.5	4.5	3.0	2.6
		20	NP	9.0	9.0	6.0	5.1
		30	NP	13.5	13.5	9.0	7.7
		40	NP	18.0	18.0	12.0	10.2
		50	NP	22.5	22.5	15.0	12.8
		10	NP	6.0	6.0	4.5	3.8
		20	NP	12.0	12.0	9.0	7.7
		30	NP	18.0	18.0	13.5	11.5
		40	NP	24.0	24.0	18.0	15.3
		50	NP	30.0	30.0	22.5	19.1
D_0		10	NP	2.8	2.8	1.8	1.6
		20	NP	5.5	5.5	3.6	3.1
		30	NP	8.3	8.3	5.4	4.6
		40	NP	11.0	11.0	7.2	6.1
		50	NP	13.8	13.8	9.0	7.7
	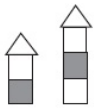	10	NP	5.3	5.3	3.8	3.2
		20	NP	10.5	10.5	7.5	6.4
		30	NP	15.8	15.8	11.3	9.6
		40	NP	21.0	21.0	15.0	12.8
		50	NP	26.3	26.3	18.8	16.0
		10	NP	7.3	7.3	5.3	4.5
		20	NP	14.5	14.5	10.5	9.0
		30	NP	21.8	21.8	15.8	13.4
		40	NP	29.0	29.0	21.0	17.9
		50	NP	36.3	36.3	26.3	22.3

For SI: 1 inch = 25.4 mm, 1 foot = 304.8 mm, 1 pound per square foot = 0.0479 kPa.

a. Linear interpolation shall be permitted.

b. Wall bracing lengths are based on a soil site class "D." Interpolation of bracing length between the S_{ds} values associated with the seismic design categories shall be permitted when a site-specific S_{ds} value is determined in accordance with Section 1613.3 of the *International Building Code*.

c. Where the braced wall line length is greater than 50 feet, braced wall lines shall be permitted to be divided into shorter segments having lengths of 50 feet or less, and the amount of bracing within each segment shall be in accordance with this table.

d. Method LIB shall have gypsum board fastened to not less than one side with nails or screws in accordance with Table R602.3(1) for exterior sheathing or Table R702.3.5 for interior gypsum board. Spacing of fasteners at panel edges shall not exceed 8 inches.

e. Method CS-SFB does not apply in Seismic Design Categories D_0 , D_1 and D_2 .

f. Methods ABW, PFH, and PFG may be used in conjunction with any bracing method permitted above and shall contribute to the amount of bracing assigned to that bracing method. When used alone in a braced wall line without any other bracing method, they shall be assigned the braced wall line lengths provided for Method WSP.

Commenter's Reason: Methods ABW, PFH, and PFG are narrow/portal frame bracing methods and, as described in the text of the IRC, are permitted to be used with any bracing method for wind or seismic applications. They contribute bracing to the required bracing length for the primary bracing method in the braced wall line where they are used.

This Public Comment added Methods ABW, PFH, and PFG to the table heading along with the clarification of the footnote, to clarify the proper use of the three narrow/portal frame methods. This Public Comment is similar to RB232, where the same three narrow wall methods were placed in the column headings of the wind table. RB235 is the Seismic version of that table.

I ask you to please modify the existing *approved* code change proposal to correct these errors.

Public Comment 2:

Proponent : Randy Shackelford, representing Simpson Strong-Tie (rshackelford@strongtie.com) requests Approve as Modified by this Public Comment.

Modify as Follows:

2015 International Residential Code

TABLE R602.10.3 (3)
BRACING REQUIREMENTS BASED ON SEISMIC DESIGN CATEGORY

· SOIL CLASS D[b] · WALL HEIGHT = 10 FEET · 10 PSF FLOOR DEAD LOAD · 15 PSF ROOF/CEILING DEAD LOAD · BRACED WALL LINE SPACING ≤ 25 FEET			MINIMUM TOTAL LENGTH (FEET) OF BRACED WALL PANELS REQUIRED ALONG EACH BRACED WALL LINE[a,f]				
Seismic Design Category	**Story Location**	**Braced Wall Line Length (feet)[c]**	**Method LIB[d]**	**Method GB**	**Methods DWB, SFB, PBS, PCP, HPS, CS-SFB[e]**	**Methods WSP, ABW, PFH, and PFG[e]**	**Methods CS-WSP, CS-G, CS-PF**
C (townhouses only)		10	2.5	2.5	2.5	1.6	1.4
		20	5.0	5.0	5.0	3.2	2.7
		30	7.5	7.5	7.5	4.8	4.1
		40	10.0	10.0	10.0	6.4	5.4
		50	12.5	12.5	12.5	8.0	6.8
	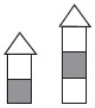	10	NP	4.5	4.5	3.0	2.6
		20	NP	9.0	9.0	6.0	5.1
		30	NP	13.5	13.5	9.0	7.7
		40	NP	18.0	18.0	12.0	10.2
		50	NP	22.5	22.5	15.0	12.8
		10	NP	6.0	6.0	4.5	3.8
		20	NP	12.0	12.0	9.0	7.7
		30	NP	18.0	18.0	13.5	11.5
		40	NP	24.0	24.0	18.0	15.3
		50	NP	30.0	30.0	22.5	19.1
D_0		10	NP	2.8	2.8	1.8	1.6
		20	NP	5.5	5.5	3.6	3.1
		30	NP	8.3	8.3	5.4	4.6
		40	NP	11.0	11.0	7.2	6.1
		50	NP	13.8	13.8	9.0	7.7
	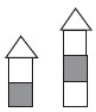	10	NP	5.3	5.3	3.8	3.2
		20	NP	10.5	10.5	7.5	6.4
		30	NP	15.8	15.8	11.3	9.6
		40	NP	21.0	21.0	15.0	12.8

		50	NP	26.3	26.3	18.8	16.0
	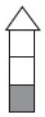	10	NP	7.3	7.3	5.3	4.5
		20	NP	14.5	14.5	10.5	9.0
		30	NP	21.8	21.8	15.8	13.4
		40	NP	29.0	29.0	21.0	17.9
		50	NP	36.3	36.3	26.3	22.3

For SI: 1 inch = 25.4 mm, 1 foot = 304.8 mm, 1 pound per square foot = 0.0479 kPa.

a. Linear interpolation shall be permitted.

b. Wall bracing lengths are based on a soil site class "D." Interpolation of bracing length between the S_{ds} values associated with the seismic design categories shall be permitted when a site-specific S_{ds} value is determined in accordance with Section 1613.3 of the *International Building Code* .

c. Where the braced wall line length is greater than 50 feet, braced wall lines shall be permitted to be divided into shorter segments having lengths of 50 feet or less, and the amount of bracing within each segment shall be in accordance with this table.

d. Method LIB shall have gypsum board fastened to not less than one side with nails or screws in accordance with Table R602.3(1) for exterior sheathing or Table R702.3.5 for interior gypsum board. Spacing of fasteners at panel edges shall not exceed 8 inches.

e. ~~Method~~ Methods PFG and CS-SFB ~~does~~ do not apply in Seismic Design Categories D_0 , D_1 and D_2 .

f. ~~Methods ABW, PFH, and PFG may be used in conjunction with any~~ When more than one bracing method ~~permitted above and shall contribute to the amount of bracing assigned to that bracing method. When~~ is used ~~alone in a braced wall line without any other bracing method, they~~ mixing methods shall be ~~assigned the braced wall line lengths provided for Method WSP~~ in accordance with Section R602.10.4.1.

R602.10.4.1 Mixing methods. Mixing of bracing methods shall be permitted as follows:

1. Mixing intermittent bracing and continuous sheathing methods from story to story shall be permitted.
2. Mixing intermittent bracing methods from *braced wall line* to *braced wall line* within a story shall be permitted. In regions within Seismic Design Categories A, B and C where the ultimate design wind speed is less than or equal to 130 mph (58m/s), mixing of intermittent bracing and continuous sheathing methods from braced wall line to braced wall line within a story shall be permitted.
3. Mixing intermittent bracing methods along a *braced wall line* shall be permitted in Seismic Design Categories A and B, and detached dwellings in Seismic Design Category C, provided the length of required bracing is determined in accordance with Table R602.10.3(1) or R602.10.3(3) ~~is~~ using the highest value of all intermittent bracing methods used.
4. Mixing of continuous sheathing methods CS-WSP, CS-G and CS-PF along a *braced wall line* shall be permitted. Intermittent methods ABW, PFH and PFG shall be permitted to be used along a *braced wall line* with continuous sheathed methods, provided the length of required bracing for that braced wall line is determined in accordance with Table R602.10.3.(1) or R602.10.3(3) using the highest value of the bracing methods used.
5. In Seismic Design Categories A and B, and for detached one- and two-family dwellings in Seismic Design Category C, mixing of intermittent bracing methods along the interior portion of a *braced wall line* with continuous sheathing methods CS-WSP, CS-G and CS-PF along the exterior portion of the same braced wall line shall be permitted. The length of required bracing shall be the highest value of all intermittent bracing methods used in accordance with Table R602.10.3(1) or R602.10.3(3) as adjusted by Tables R602.10.3(2) and R602.10.3(4), respectively. The requirements of Section R602.10.7 shall apply to each end of the continuously sheathed portion of the braced wall line.

Commenter's Reason: We think that it shows favoritism toward certain bracing methods when only one method is added to the bracing length table, and not all applicable bracing methods.
So we are proposing to also add methods ABW, PFH, and PFG to the WSP column heading, since these are considered intermittent bracing methods and their length of bracing would be the same as a WSP panel, since that was the basis for the testing that originally evaluated these methods. Footnote e is revised to include Method PFG because PFG is only permitted in Seismic Design Categories A, B, and C per Section R602.10.6.3. We further revise the proposed Footnote f to point out to the code user that the methods can be combined as long as the requirements of Section R602.10.4.1 are met. Pointing to the general requirements on combining all methods seems better than only showing what is permitted for three methods.

In writing this public comment, we did notice one area of Section R602.10.4.1 which could use improving. That is the case where intermittent ABW, PFH, or PFG methods are mixed with continuous methods (CS-WSP, CS-G, and CS-PF). The issue is that the intermittent ABW, PFH, and PFG methods have their length of bracing based on the intermittent WSP method. The continuous methods require a shorter length of bracing because their basis is assumed to be stronger than the WSP method. If the intermittent narrow methods are combined with the stronger continuous methods and the bracing lengths are based on the continuous method, there will be an insufficient amount of bracing. So a method is proposed that is exactly thes same as used in paragraphs #3 above and #5 below this one, where the bracing amount has to be based on the weaker method. This is intended to be exactly the same wording as we propose on our public comment to RB232, but is repeated here in case that proposal is not accepted.

We think this makes an improvement to the code by listing all the applicable bracing methods in the column heading for the seismic bracing length table, giving the user guidance on when all the methods can be combined, and adding the correct method for determining the length of bracing when certain methods are combined.

RB235-16

RB242-16

IRC: , R602.10.5.2, R602.10.5.3 (New).

Proposed Change as Submitted

Proponent : Edward Keith, representing APA- The Engineered Wood Association (ed.keith@apawood.org)

2015 International Residential Code

Revise as follows:

R602.10.5.2 Partial credit for intermittent bracing. *No change to text.*

Add new text as follows:

R602.10.5.3 Partial credit for CS-WSP. For Method CS-WSP in Seismic Design Categories A, B and C, panels between 20 and 24 inches (508 mm and 610 mm) in length shall be considered a braced wall panel and shall be permitted to partially contribute toward the required length of bracing in Tables R602.10.3(1) and R602.10.3(3), and the contributing length shall be determined from Table R602.10.5.3.

TABLE R602.10.5.3
PARTIAL CREDIT FOR CS-WSP LESS THAN FULL LENGTH WITH 8- AND 9-FOOT WALLS[a]

Wall Height (ft)	Length of Full Height Method CS-WSP Panel (in.)	Adjacent to a Clear Opening Height (in.) or less	Contributing Length of Braced Wall Panel (in.)
8 or 9	24	<60	24
		64	22
		68	20
		72	18
		76	16
		80	14
	20	<60	20
		64	18
		68	16
		72	15
		76	13
		80	11

For SI: 1 inch = 25.4 mm, 1 foot = 304.8 mm.
a. Linear interpolation shall be permitted.

Reason: In order to meet the owners' and/or designers' aesthetic requirements for homes built on narrow building lots, architects and home designers often have a difficult time placing the correct amount of bracing in the front and back sides of these structures. It is often difficult to find useable full-height segments that can be counted as bracing segments between garage doors, entrance ways, bump-outs and windows.
Certainly narrow segments, shorter than required for bracing, do contribute somewhat to the strength of the walls they are a part of. For a number of years, the IRC has recognized this for segmented shear walls as can be seen in current Table R602.10 5.2, which permits narrower segments to be used at bracing for some length less than their measured length. Based on full-scale testing, these lengths are reduced to accommodate the reduced stiffness of the narrow segments and ensure that the reduced lengths work to supplement the shear resistance of those segments that do meet the prescribed height to length ratios.

APA conducted full-scale testing for continuously sheathed wood structural panels (Method CS-WSP) in a similar manner as the development of the published provisions for Method CS-WSP walls. The results of this testing is provided in the proposed new Table R602.10.5.3 above. Interested parties can download a free copy of the APA test reports covering this testing (APA Reports T2012L-16 and T2012L-30) at :

http://www.apawood.org/Data/Sites/1/documents/technicalresearch/t2012-16(l)-narrow-wall-bracing.pdf

http://www.apawood.org/Data/Sites/1/documents/technicalresearch/t2012-30(l)-8-foot-narrow-wall-bracing.pdf

The proposed table permits continuously sheathed segments as narrow as 20 inches to be used for bracing at a reduced length. The table provides reduced lengths based on the opening size to ensure stiffness compatibility with traditional braced wall methods.

We encourage the committee to provide this additional tool for continuously-sheathed structures for the builder, designer, architect and engineer trying to prescriptively brace these difficult situations.

Cost Impact: Will not increase the cost of construction
The proposed change will not increase the cost of construction and may provide opportunities for builders and designers to decrease costs due to use of more efficient design and construction strategies.

RB242-16 : R602.10.5.2-KEITH11123

Public Hearing Results

Committee Action: **Disapproved**

Committee Reason: While the committee felt that the narrow panels would provide some partial contributions there is not enough data provided to justify the proposed amounts.

Assembly Action: **None**

Individual Consideration Agenda

Public Comment 1:

Proponent : Edward Keith, representing APA- The Engineered Wood Association (ed.keith@apawood.org); Borjen Yeh (borjen.yeh@apawood.org) requests Approve as Modified by this Public Comment.

Modify as Follows:

2015 International Residential Code

R602.10.5.3 Partial credit for CS-WSP. For Method CS-WSP in Seismic Design Categories A, B and C, panels between 20 and 24 inches (508 mm and 610 mm) in length shall be considered a braced wall panel and shall be permitted to partially contribute toward the required length of bracing in Tables R602.10.3(1) and R602.10.3(3), and the contributing length shall be determined from Table R602.10.5.3. Partial credit for Method CS-WSP shall not be applied to either end of a braced wall line.

Commenter's Reason: At the mid-year meeting this proposal was denied because of insufficient data. The specific issue was that only restrained braced wall panels had been tested and that unrestrained panels should be tested as well. Supplemental testing was conducted on unbraced eight-foot high wall assemblies with a pair of 20-inch narrow wall segments next to two 80-inch high man-door openings. In the original tests this was the assembly most impacted by the narrow wall configuration. As such, this was the basis of our additional test comparison. The results of this supplemental testing showed that the unrestrained 20-inch-long walls contributed over 18 inches of bracing each to the whole braced wall line. As the contribution to the bracing length in the original proposal is only providing 11 inches of bracing for this configuration, it can be seen that the proposed change is conservative for both restrained and unrestrained wall lines. The results of this testing can be seen in APA LAb Report T2016L-24. (Copies can be obtained at APA Lab Report T2016-24L (https://www.apawood.org/Data/Sites/1/documents/technicalresearch/t2016-24L.pdf).)
To further relieve concerns voiced about the suitability of such reduced length panels to sufficiently anchor the ends of a braced wall line, a limitation was added to the charging statement for the narrow wall adjustments from being used at the ends of braced wall lines, thus eliminating this concern.

We ask the body to overturn the committees action as we have conducted the additional tests requested and addressed the concern over braced wall-line restraint.

Proponent : Randy Shackelford, Simpson Strong-Tie Co., representing Simpson Strong-Tie (rshackelford@strongtie.com) requests Disapprove.

Commenter's Reason: We believe the IRC Committee was correct to Disapprove this code change proposal. However, in case the proponent puts in a Public Comment for approval or approval as modified, we wanted to lay out our arguments on why this proposal should be disapproved.

1. Our primary objection was in how the proponent analyzed the data to support their change. Their reduction factors were strictly based on load at deflection. The proponent states that the load of the narrow panels for partial credit was determined in accordance with ICC-ES AC130. However, AC130 states in Section 5.2.1 "Allowable Stress Design: The Allowabe Stress Design (ASD) load for the test sample shall be the lesser of the allowable loads based on a drift limit, strength limit, or calculation limit, determined as follows:"

So we analyzed the test data based on the strength limit state and found MUCH lower adjustment factors should have been used. In fact, the adjustment factor would be less in 6 of the 8 cases, with several being significantly less. The two adjustment factors are shown in the table below:

	8' Walls		9' walls	
Load Case	Reduction used, based on deflection	Reduction based on strength	Reduction used, based on deflection	Reduction based on strength
24' panels with doors	0.58	***0.40***	0.68	***0.47***
24" panels with windows	1.17 (1.0 used)	***0.84***	1.10 (1.0 used)	***0.87***
20" panels with doors	0.71	***0.41***	0.56	0.58
20" panels with windows	1.10 (1.0 used)	***0.87***	1.04 (1.0 used)	1.29

This alone is enought to show that the proposed reduced length of panels and their "partial credit length" are not correct.

2. Our second objection is that these narrow panels were tested always combined with a fully compliant 4' wide braced wall panel. We think to truly evaluate the deflection and strength capacity of these narrow walls, they should be tested by themselves. We strongly believe that the inclusion of the 4' wide panel combined with the narrow panels greatly increases the combined stiffness and does not properly show the stiffness of the narrow panel itself. Further, there are no requirements in this code change that these narrow panels be combined with a minimum number of 4' panels in the wall, which would at least ensure the wall is closer to what was tested.

3. The bracing amounts in the IRC rely on the addition of gypsum board to provide the required strength. This test program does not evaluate the effect of the narrow panels on the contribution of the gypsum board, which is assumed to contribute 100 plf. Gypsum sheathing is more sensitive to panel width than wood structural panels, which can be seen by its much more restrictive aspect ratio limits in the AWC SDPWS design standard.

4. In the tests, holdowns were installed at one corner of the narrow panels, which should increase their capacity. However, for the control tests that establish the baseline, holdowns were not installed at the corner of the 4' panel.

5. We calculate that the capacity of the holdowns used in this test were probably closer to 2000 pounds, not 800 pounds as the code requires. The test report states that three Simpson 1/4" by 3" long SDS screws were used in the holdowns. Each screw has a capacity of 672 pounds when resisting wind and seismic forces, and installed though a steel fixture.

We think most of these items alone would be enought to recommend disapproal of this code change, but taken together, they make a very strong argument for upholding the Committee action of Disapproval.

RB242-16

RB251-16
IRC: R609.1.

Proposed Change as Submitted

Proponent : Thomas Bren, representing Thomas Bren Homes, Inc.

2015 International Residential Code

R609.1 General. This section prescribes performance and construction requirements for exterior windows and doors installed in walls. Windows and doors shall be installed and flashed in accordance with the fenestration manufacturer's written instructions. Window and door openings shall be flashed in accordance with Section R703.4. Written installation instructions shall be provided by the fenestration manufacturer for each window or door. A means shall be utilized, such as an air cavity or free-draining material located around the perimeter of the assembly inside of the nailing flange, for draining incidental moisture from the assembly to pan flashing that drains to the exterior.

Reason: Add new language to clarify the intent, and enhance the effectiveness, of proper window installation requirements. Moisture is the most significant factor in the deterioration of buildings, and window assemblies are the most vulnerable to moisture infiltration. The existing code language does not have specific, enforceable code language to require maintaining an effective drainage plane around window assemblies. For all points of moisture intrusion to be eliminated, the workmanship must be perfect. However, even a perfectly flashed and caulked window will suffer degradation over time due to environmental conditions. For this reason, it is necessary to incorporate some redundancy in the process. It is inevitable that some moisture will enter the window frame opening. This moisture must be allowed to escape from the assembly to avoid structural damage and mold growth. When the area behind the nailing flange is obstructed, the blockage itself or capillarity will restrict drainage. An air space or free draining material in a window assembly, behind the water shedding surface, is an excellent way to provide good drainage and convective air flow for drying. This can be accomplished by installing a barrier to prevent insulation or other materials from reaching the interior side of the nailing flange or installing a material that allows free draining and air movement. This air space or free draining material will be less exposed to the elements and linear expansion, allowing it to last longer than exterior caulking, etc. This method has been tested under extreme conditions and proven to be effective.

Bibliography: Research Highlights, Technical Series 03-124, CMHC
Keeping Walls Dry - Parts 1 & 2, CMHC, Dale Kerr - P. Eng.

Cost Impact: Will increase the cost of construction
Depending upon the methods used, there may be a slight increase in the cost of compliance due to labor and a small amount of materials. However, the benefits of ensuring moisture drainage and reducing the potential for structural damage and mold growth far outweigh the minor costs that may be involved.
The cost impact of this additional step to install a method to stop insulation or other material from reaching the interior side of the nailing flange, including material and labor, can be expected to add between $10 - $20 per window opening. This is contingent upon the size of the opening, but in most cases will fall into this range. This cost is a fraction of that applied to the remediation required for a system which fails.

The following are examples of remediation costs that would be avoided based on feedback from builders, remodelers, and construction experience:

Initial site visit: $200 - $500

R&R of single unit: $1,500 - $5,000

R&R of multiple units with extensive damage has ranged from thousands of dollars to exceeding the value of the structure.

RB251-16 :
R609.1-
BREN12821

Public Hearing Results

Committee Action: **Disapproved**

Committee Reason: The initial proposal is in the wrong place, it should be in R703.4. But more importantly this could be in conflict with the manufacturer's instruction and the committee encourages the proponent to work with interested parties and bring this back as a public comment.

Individual Consideration Agenda

Public Comment 1:

Proponent : Thomas Bren, representing Thomas Bren Homes, Inc. (tbren@thomasbrenhomes.com) requests Approve as Modified by this Public Comment.

Replace Proposal as Follows:

2015 International Residential Code

R703.4 Flashing. Approved corrosion-resistant flashing shall be applied shingle-fashion in a manner to prevent entry of water into the wall cavity or penetration of water to the building structural framing components. Self-adhered membranes used as flashing shall comply with AAMA 711. Fluid-applied membranes used as flashing in exterior walls shall comply with AAMA 714. The flashing shall extend to the surface of the exterior wall finish. Approved corrosion-resistant flashings shall be installed at the following locations:

1. Exterior window and door openings. Flashing at exterior window and door openings shall extend to the surface of the exterior wall finish or to the water-resistive barrier complying with Section 703.2 for subsequent drainage. Mechanically attached flexible flashings shall comply with AAMA 712. Flashing at exterior window and door openings shall be installed in accordance with one or more of the following:
    1.1. The fenestration manufacturer's installation and flashing instructions, or for applications not addressed in the fenestration manufacturer's instructions, in accordance with the flashing manufacturer's instructions. Where flashing instructions or details are not provided, pan flashing shall be installed at the sill of exterior window and door openings. Pan flashing shall be sealed or sloped in such a manner as to direct water to the surface of the exterior wall finish or to the water-resistive barrier for subsequent drainage. Openings using pan flashing shall incorporate flashing or protection at the head and sides. <u>Where flashing instructions or details are not provided and pan flashing is installed, openings shall maintain unobstructed free drainage around the perimeter of the assembly inside the nailing flange location.</u>
2. In accordance with the flashing design or method of a registered design professional.
3. In accordance with other approved methods.
4. At the intersection of chimneys or other masonry construction with frame or stucco walls, with projecting lips on both sides under stucco copings.
5. Under and at the ends of masonry, wood or metal copings and sills.
6. Continuously above all projecting wood trim.
7. Where exterior porches, decks or stairs attach to a wall or floor assembly of wood-frame construction.
8. At wall and roof intersections.
9. At built-in gutters.

Commenter's Reason: Code Action Committee directed movement of the proposal to Chapter 703.4 and the Committee encouraged the proponent to work with interested parties and bring this back as a public comment. . Proposal has been modified and relocated to eliminate potential conflict with manufacturer instructions. Positive testimony in support of the proposal was made at the Code Action Hearing.
Original Reason language modifed as follows:

Add new language to enhance the water drainage of pan flashed windows and to allow energy code requirements and pan flashing to co-exist. The energy code requires the space between the window/door jambs and framing shall be sealed. Window installers almost exclusively use expanding foam as the sealant. When the expanding foam, or any other sealant, reaches to the exterior nailing flange, it blocks the free drainage of water to the exterior and invites water to collect and wick to the interior. Maintaining an unobstructed air space around the perimeter of the pan flashing system will greatly enhance proper water drainage, allow convective air flow for drying, and avoid water infiltration. This can be accomplished by installing a barrier to prevent expanding foam, insulation or other sealant material from reaching the interior side of the nailing flange. There are effective and economical methods available to accomplish this.

Unobstructed drainage is essential to the functioning of pan flashing. The existing pan flashing code language does not have specific, enforceable language to require maintaining an unobstructed air space drainage plane around window assemblies. This code change does not interfere or override the window manufacturer's specific installation instructions. This code change pertains to where neither the window manufacturer nor the pan flashing manufacturer provide instruction and existing code prescribes that a pan flashing system is utilized.

Cost Impact: This will not increase the cost.

When manufacturer's instructions are absent and thus pan flashing is installed, this change requires an installer to maintain an

air space in the same manner as most manufacturer's instructions already require. This change prevents an installer from using the lack of instructions to "skip a step". The methods, time, and material incurred complying with manufacturer's instructions to maintain an air space are the same methods, time, and material required by this change.

The benefits of the change are improved pan flashing drainage performance and reduction of remediation costs associated with water intrusion, which can range anywhere from $500 to exceeding the value of the structure.

Bibliography: Research Highlights, Technical Series 03-124, CMHC
Keeping Walls Dry - Parts 1 & 2, CMHC, Dale Kerr - P. Eng.

RB251-16

RB252-16
IRC: R609.1.

Proposed Change as Submitted

Proponent : Jay Crandell, ARES Consulting, representing Foam Sheathing Committee of the American Chemistry Council

2015 International Residential Code

Revise as follows:

R609.1 General. This section prescribes performance and construction requirements for exterior windows and doors installed in walls. Windows and doors shall be installed and flashed in accordance with the fenestration manufacturer's written instructions or other approved methods. Window and door openings shall be flashed in accordance with Section R703.4. Written installation instructions shall be provided by the fenestration manufacturer for each window or door.

Reason: The concept of "other approved methods" is used more than 60 times in the I-codes for applications including fire protection, structural matters, installation instructions, plumbing, water proofing, and many others. In addition, the need for other approved fenestration anchoring methods are recognized in Section R609.7.1 and serveral different approved methods of flashing are included in Section R703.4. Furthermore, window manufacturer installation instructions often require other approved methods for installation, recognize their necessity, or place responsibility for suitability of any installation method (including those in the installation instruction) on the user. Consequently, this proposal is consistent with these specific intentions and realities, makes the intent more transparent, and better enables the market to use other approved methods of installation when needed or when more appropriate for a given application.
To further justify and support the need for this proposal, the following are a few representative quotes from window manufacturer installation instructions, including some of the leading window manufacturers (names are purposely not disclosed):

"These instructions should meet or exceed window installation codes and regulations...may not be sufficient for codes in your particular area or application"

"Not all window types may be installed into every wall condition in all areas..."

"These instructions are not intended to advise on structural requirements for any given installation."

"Actual conditions found in buildings vary greatly. There may be cases where substantial additional considerations and precautions may be required..."

"The selection of fasteners for use in the installation is the responsibility of the installer...When necessary an engineer should be consulted to ensure structural integrity..."

"Building designs, construction methods, building materials, and site conditions unique to your project may require an installation method different from these insttructions and/or additional care. Determining the appropriate installation method is the responsibility of you, your architect, or construction professional"

Clearly, the intention is to rely on other approved methods in many cases and it is often a responsibility assigned to the users of the product and the code. Thus, the code should explicitly recognize use of other approved methods for window installation and this also will serve to prevent ad-hoc decisions on window installation that otherwise occur without any consideration of approved methods. There are many reputable sources available to characterize approved methods of installation including engineered designs, research/testing reports by approved sources or approved agencies, code evaluation reports, DOE Building America program guidance reports and details, ASTM E2112, and various other sources for good practice in the recognized literature.

Cost Impact: Will not increase the cost of construction
The proposal will expand legitimate options for window installation as needed.

RB252-16 :
R609.1-
CRANDELL12582

Public Hearing Results

Committee Action: **Disapproved**

Committee Reason: The committee felt that the current language is clear that the attachment of windows and doors is the responsibility of the manufacturer. If the proposed language were added it would put more responsibility on the building official.

Assembly Action: **None**

Public Comment 1:

Proponent : Jay Crandell, P.E., ARES Consulting, representing Foam Sheathing Committee of the American Chemistry Council (jcrandell@aresconsulting.biz) requests Approve as Modified by this Public Comment.

Modify as Follows:

2015 International Residential Code

R609.1 General. This section prescribes performance and construction requirements for exterior windows and doors installed in walls. Written installation instructions shall be provided by the fenestration manufacturer for each window and door. Windows and doors shall be installed and flashed in accordance with the fenestration manufacturer's written instructions or other approved methods. Window and door openings shall be flashed in accordance with Section R703.4. ~~Written installation instructions shall be provided by the fenestration manufacturer for each window or door.~~

Commenter's Reason: This PC places the requirements in a proper hierarchy for compliance and enforcement by moving the existing last sentence to the position of the second sentence of the paragraph. Thus, the logical order of requirements is as follows: (1) installation instructions must be provided by the window manufacturer, (2) those instructions must be followed or an alternative approved method, and (3) flashing must comply with Section R703.4 since Section R609 addresses support and anchorage. This approach addresses one of the concerns with the original proposal in that it was unclear if the original proposal could be interpreted such that a window manufacturer would not need to provide a written instruction (for at least one method of installation) if an other approved method was being used instead. This public comment makes it clear that the fenestration manufacturer is always required to provide written instructions, even if an alternative method of installation is used. This also addresses the committee reason statement such that using the window manufacturer's instruction is automatically considered approved (meets code). Thus, as with any other application of alternative means and methods per Section R104.11, the code official only needs to request supporting documentation (research report, code evaluation report, engineered design, etc.) if an alternate means of installation is being used.

Proponent : Jay Crandell, P.E., ARES Consulting, representing Foam Sheathing Committee of the American Chemistry Council (jcrandell@aresconsulting.biz) requests Approve as Submitted.

Commenter's Reason: This proposal had broad support from the floor at the code hearing, including leading builders, manufacturers, and installers. This proposal will not put additional responsibility on code officials that is not already "hidden" in manufacturer installation instructions that recognize the need for alternative methods for many situations. In addition, it is a code official's privileged responsibility per Section R104.11 of the code to ensure that other means and methods are available to allow for innovation and flexibility in meeting the intent of the code. Without the exercise of this responsibility, the regulatory process creates a roadblock to innovation and practical solutions where needed. There are code evaluation processes and reports available to support the code official's determination as is common for many other alternative means and methods of construction. Refer to the reason statement with the original proposal for additional information justifying this public comment.

RB252-16

RB253-16
IRC: R609.1.

Proposed Change as Submitted

Proponent : Jeff Inks, Window & Door Manufacturers Association, representing Window & Door Manufacturers Association (jinks@wdma.com)

2015 International Residential Code

R609.1 General. This section prescribes performance and construction requirements for exterior windows and doors installed in walls. Windows and doors shall be ~~installed and flashed~~ anchored in accordance with ~~the fenestration manufacturer's written instructions~~ Section R609.7 . Window and door openings shall be flashed in accordance with Section R703.4. ~~Written installation~~ Installation instructions shall be provided by the fenestration manufacturer ~~for each window or door~~.

Reason: The long standing intent of Section R609 is to provide the appropriate performance and construction requirements for window and door products, and anchoring requirements with respect to the installation of them. As the general provision for Section R609, R609.1 should make that clear and for further clarification, make clear that flashing requirements for the window and door opening are provided in Chapter 7 Wall Coverings where they belong. As currently written, the inclusion of flashing requirements in this section is not necessary and more importantly conflicts with the provisions of Section R703.4 which does not restrict builders from using other proper flashing installation methods in addition to those included in the manufacturer's instructions when those instructions may not cover a particular installation aspect/s. This proposal corrects that and brings the general provisions of R609.1 back in-line with the intent of Section R609 on the whole by clarifying anchoring must comply with Section R609.7 and flashing of the opening with Section R703.4. The requirement that manufacturers must provide installation instructions remains and more clearly reflects how installation instructions are being provided by manufacturers.

Cost Impact: Will not increase the cost of construction
This revision eliminates the conflict in flashing requirements created by the inclusion of them in Section 609.1. It does not add any new provisions and will actually reduce the cost of construction in some cases by ensuring the full range of flashing installation options are availed to builders as intended.

RB253-16 :
R609.1-
INKS13358

Public Hearing Results

Committee Action: **Disapproved**

Committee Reason: The committee felt that requiring the fenestration manufacturer's written instructions should remain in the code. The current code language has resulted in improved performance as regards moisture intrusion.

Assembly Action: **None**

Individual Consideration Agenda

Public Comment 1:

Proponent : Jeff Inks, representing WDMA (jinks@wdma.com) requests Approve as Modified by this Public Comment.

Modify as Follows:

2015 International Residential Code

R609.1 General. This section prescribes performance and construction requirements for exterior windows and doors installed in walls. Windows and doors shall be installed ~~anchored~~ in accordance with ~~Section R609.7~~ the fenestration manufacturer's written instructions. ~~.~~ Window and door openings shall be flashed in accordance with Section R703.4. ~~Installation~~ Written installation instructions shall be provided by the fenestration manufacturer for each window or door.

Commenter's Reason: The original proposal was intended to accomplish several things, primarily to clarify the intent of section R609, correct the conflict that it creates with the flashing provisions in Chapter 7, and to update the requirements for installation instructions to better reflect how they are now made available by manufacturers.

However, concerns were raised that manufacturers would not be required to provide written installation instructions with every window. The modification proposed by this public comment addresses that concern by restoring the existing provisions for installation instructions and it simply clarifies the intent of this section by eliminating the conflict in window and door flashing requirements that is created by "and flashed" in accordance with the fenestration manufacturer's written installation instructions in the second sentence of the current IRC Section 609.1.

As currently written, the inclusion of "and flashed" in this section restricts flashing installation to be only in accordance with the fenestration manufacturers written installation instructions. That conflicts with the flashing requirements in Chapter 7 Wall Coverings (where flashing provisions belong) that Section 609.1 subsequently directs the user to, as well as conflicting with their intent, which is to not restrict builders from using other approved flashing installation methods as an alternative to those included in the fenestration manufacturer's instructions when those instructions may not cover a particular installation aspect/s.

RB253-16

RB257-16
IRC: R609.4, R609.4.1 (New).

Proposed Change as Submitted

Proponent : T. Eric Stafford, PE, representing Institute for Business and Home Safety

2015 International Residential Code

R609.4 Garage doors. *No change to text.*

Add new text as follows:

R609.4.1 Garage door labeling. Garage doors shall be labeled with a permanent label identifying the garage door manufacturer, the garage door model/series number, the positive and negative design wind pressure rating, the installation instruction drawing reference number, and the applicable test standard.

Reason: This proposal is one of several that are addressing labeling of critical components of the building envelope. The primary purpose of this code change is to require that garage doors have a permanent label that provides a way for building owners, homeowners, and others to be able to determine their performance characteristics after the building has been occupied. The 2015 IRC does not require any type of label for garage doors. For products that don't have permanent labels, it becomes nearly impossible for the owner to determine the structural wind load resistance and/or energy efficiency of the garage doors after they've occupied the building. This proposal would simply require some type of permanent marking on the garage door indicating the manufacturer and model/series number, and performance characteristics so that the specific performance characteristics could be retrieved at a later date.
For the past 10-15 years, there has been a push towards considering sustainability in the way our buildings are constructed in this country. If this goal is to be successful and building owners and occupants increasingly want more information about the sustainability of the buildings they occupy, they need to be provided with information needed to determine how critical components are expected to perform in the buildings they use. Garage doors are important components of the building envelope and their performance is critical in preventing wind and water infiltration as well as to maintaining the overall structural integrity of the building.

Some manufacturers already include permanent labels on their products that provide traceability to the manufacture and the product characteristics. The Florida Building Code has required this type of label since the 2007 edition and has continued to require it in subsequent editions. The following is the relevant text from the 5th Edition (2014) Florida Building Code, Residential:

R612.4.1 Garage door labeling. Garage doors shall be labeled with a permanent label provided by the garage door manufacturer. The label shall identify the garage door manufacturer, the garage door model/series number, the positive and negative design pressure rating, indicate impact rated if applicable, the installation instruction drawing reference number, the Florida Product Approval or Miami-Dade Product Approval number if applicable, and the applicable test standards. The required garage door components for an approved garage door assembly may be indicated using a checklist form on the label. If a checklist format is used on the label, the door installer or the garage door manufacturer shall mark the selected components on the checklist that are required to assemble an approved garage door system. The installation instructions shall be provided and available on the job site.

Another consideration is that insurance incentives are now being offered in some states for homes, new and existing, that comply with certain levels of the Fortified program administered by IBHS. The Fortified program is a set of engineering and building standards designed to help strengthen new and existing homes through system-specific building upgrades to minimum building code requirements that will reduce damage from specific natural hazards. Fortified offers three different levels of designation (bronze, silver, and gold) depending on the extent of the recommended "upgrades" to the building's wind resistance. To qualify for a designation, the home has to be inspected. Without a permanent label indicating the manufacturer and product model/series number, the performance characteristics often cannot be determined, and certain Fortified designations become difficult or impossible to be given.

Approval of this proposal will assure, going forward, that new or replaced garage doors will be labeled such that building owners and those considering the purchase of buildings with these products will be able to obtain information necessary for determining the expected performance of these critical components of the building envelope.

Cost Impact: Will increase the cost of construction
Will impact cost on some manufacturers. The code does not currently require a permanent label. However, some garage door manufacturers voluntarily apply a permanent label that identifies the critical performance characteristics. There will be no cost impact to those manufacturers.

Public Hearing Results

Committee Action: **Disapproved**

Committee Reason: The committee felt this was to restrictive in that the reason statement indicates it is intended for high wind regions only but the language would require it for all garage doors. There is a need for identifying the wind load rating where the doors are in high wind regions.

Assembly Action: **None**

Individual Consideration Agenda

Proponent : T. Eric Stafford, PE, representing Institute for Business and Home Safety; Joseph Hetzel (Jhetzel@thomasamc.com) requests Approve as Submitted.

Commenter's Reason: IBHS requests this proposal to be approved as originally submitted. The IRC Building committee disapproved this proposal on the basis that they thought the reason statement indicated it was intended only for high wind regions but the proposal would apply to all garage doors. They also noted that there was a need to identify the wind load rating of garage doors in high wind regions. This proposal doesn't change any of the testing requirements for garage doors. Section R609.4 of the 2015 IRC requires all garage doors to be tested in accordance with ASTM E 330 or DASMA 108, not just thos installed in high wind regions.

2015 IRC:

R609.4 Garage doors. Garage doors shall be tested in accordance with either ASTM E 330 or ANSI/DASMA 108, and shall meet the acceptance criteria of ANSI/DASMA 108.

This proposal is simply requiring a permanent label. As indicated in our reason statement, insurance incentives are now being offered in some states for homes, new and existing, that comply with certain levels of the Fortified program administered by IBHS. The Fortified program is a set of engineering and building standards designed to help strengthen new and existing homes through system-specific building upgrades to minimum building code requirements that will reduce damage from specific natural hazards. Fortified offers three different levels of designation (bronze, silver, and gold) depending on the extent of the recommended "upgrades" to the building's wind resistance. To qualify for a designation, the home has to be inspected. Without a permanent label indicating the manufacturer and product model/series number, the performance characteristics often cannot be determined, and certain Fortified designations become difficult or impossible to be given.

Approval of this proposal will assure, going forward, that new or replaced garage doors will be labeled such that building owners and those considering the purchase of buildings with these products will be able to obtain information necessary for determining the expected performance of these critical components of the building envelope.

IBHS worked directly with the garage door industry association (DASMA) to craft language for the IBC and IRC. Most of the language regarding identification on the label was provided by DASMA. A representative of DASMA provided testimony in support of this proposal.

RB259-16

IRC: R202 (New), R609.6, R609.6.1, R609.6.2 (New).

Proposed Change as Submitted

Proponent : T. Eric Stafford, PE, representing Institute for Business and Home Safety

2015 International Residential Code

Add new text as follows:

SECTION R202 DEFINITIONS

Impact Protective System Construction that has been shown by testing to withstand the impact of test missiles and that is applied, attached, or locked over exterior glazing.

Revise as follows:

R609.6 Wind-borne debris protection. Protection of exterior windows ~~and~~ , glass doors , and doors with glass in buildings located in wind-borne debris regions shall be in accordance with Section R301.2.1.2.

R609.6.1 Fenestration testing and labeling. Fenestration shall be tested by an *approved* independent laboratory, listed by an *approved* entity, and bear a *label* identifying manufacturer, performance characteristics, and *approved* inspection agency to indicate compliance with the requirements of the following specification(s):

1. ASTM E 1886 and ASTM E 1996; or
2. AAMA 506.

Add new text as follows:

R609.6.2 Impact protective systems testing and labeling Impact protective systems shall be tested for impact resistance by an approved independent laboratory for compliance with ASTM E 1886 and ASTM E 1996. Impact protective systems shall also be tested for design wind pressure by an approved independent laboratory for compliance with ASTM E 330. Required design wind pressures shall be determined in accordance with Table R301.2(2) adjusted for height and exposure in accordance with Table R301.2(3) or determined in accordance with ASCE 7. For the purposes of this section, design wind pressures determined in accordance with ASCE 7 are permitted to be multiplied by 0.6.

Impact protective systems bear a label identifying the manufacturer, performance characteristics, and approved inspection agency. Impact protective systems shall have a permanent label providing traceability to the manufacturer, product designation, and performance characteristics. The permanent label shall be acid etched, sand blasted, ceramic fired, laser etched, embossed or of a type that, once applied, cannot be removed without being destroyed.

Reason: This proposal is one of several that are addressing labeling of critical components of the building envelope. The primary purpose of this code change is to require that impact protective systems (hurricane shutters) have a permanent label that provides a way for building owners, homeowners, and others to be able to determine their performance characteristics after the building has been occupied. The 2015 IRC does not require any type of label for impact protective systems. For products that don't have permanent labels, it becomes nearly impossible for the owner to determine the structural wind load resistance and impact resistance of the products after they've occupied the building. This proposal would simply require some type of permanent marking on the impact protective system indicating the manufacturer and model/series number, and performance characteristics so that the specific performance characteristics could be retrieved at a later date. The permanent label would only need to provide traceability to the product. However, it could provide all the required information. If the relevant information is not provided on a permanent label, a temporary removable label is required to be applied so that local code officials can verify that the appropriate impact protective system was provided.
For the past 10-15 years, there has been a push towards considering sustainability in the way our buildings are constructed in this country. If this goal is to be successful and building owners and occupants increasingly want more information about the sustainability of the buildings they occupy, they need to be provided ways to be able to determine how critical components are expected to perform in the buildings they use. Impact protective systems are important components of the building envelope and their performance is critical to maintaining the overall structural integrity of the building.

Some manufacturers already include permanent labels on their products that provide traceability to the manufacture and the product characteristics. The Florida Building Code has required a permanent label since the 2007 edition and has continued to require it in subsequent editions. The following is the relevant text from the 5th Edition (2014) Florida Building Code, Residential:

R615.1 Impact resistant coverings shall be tested at 1.5 times the design pressure (positive or negative) expressed in pounds per square feet as determined by the Florida Building Code, Building Section 1609 for which the specimen is to be tested. The design pressures, as determined from Section 1609 of the Florida Building Code, Building or ASCE 7, are permitted to be multiplied by 0.6.

R615.1.1 Impact resistant coverings shall be labeled in accordance with the provisions of Section R615.

R615.2. Labels. A permanent label shall be provided by the product approval holder on all impact resistant coverings.

Another consideration is that insurance incentives are now being offered in several states for homes, new and existing, that comply with certain levels of the Fortified program administered by IBHS. The Fortified program is a set of engineering and building standards designed to help strengthen new and existing homes through system-specific building upgrades to minimum building code requirements that will reduce damage from specific natural hazards. Fortified offers three different levels of designation (bronze, silver, and gold) depending on the extent of the recommended "upgrades" to the building's wind resistance. To qualify for a designation, the home has to be inspected. Without a permanent label providing traceability to the manufacturer and product, the performance characteristics often cannot be determined, and certain Fortified designations become difficult or impossible to be given.

This proposal also provides some additional clarification for impact protective systems that is lacking in the IRC. New Section R609.6.2 clarifies that impact protective systems also have to be capable of resisting the required design wind pressure as well as the impact criteria. New language is added to clarify the relationship between design wind loads calculated in accordance with ASCE 7-10 and the wind load testing requirements of ASTM E 330.

Approval of this proposal will assure, going forward, that new or replaced impact protective systems will be labeled such that building owners and those considering the purchase of buildings with these products will be able to obtain information necessary for determining the expected performance of these critical components used to protect the building envelope in hurricane prone areas.

Cost Impact: Will increase the cost of construction
Will result in an increase in cost. A consultant representing the industry estimates the cost of providing labels on impact resistant covering products to be as follows:
a. Water Resistant Self-adhering Permanent Labels approximately $0.15 per label. Such labels would most likely be used on Accordion, Roll, Bahama, and Colonial style shutters.
b. Embossed or ink jet labels used on metal and plastic panels would cost approximately $0.05 per label.

RB259-16 :
R609.6-
STAFFORD12147

Public Hearing Results

Committee Action: **Approved as Submitted**

Committee Reason: This is a needed change because it is difficult to identify whether a hurricane shutter or impact protective system meets the code specified requirements. Requiring a permanent label will alleviate this problem.

Assembly Action: **None**

Individual Consideration Agenda

Public Comment 1:

Proponent : Jessica Ferris, World Millwork Allliance, representing World Millwork Alliance (jferris@worldmillworkalliance.com) requests Approve as Modified by this Public Comment.

Modify as Follows:

2015 International Residential Code

R609.6 Wind-borne debris protection. Protection of glazing in exterior windows~~, glass doors,~~ and doors ~~with glass~~ in buildings located in wind-borne debris regions shall be in accordance with Section R301.2.1.2.

Commenter's Reason: This modification better clarifies the intent of Section R609.6, which references Section R301.2.1.2, which addresses the protection of "exterior glazing" from windborne debris.

Proponent : Thomas Johnston, Town & country Industries, representing International Hurricane Protection Association (tom.johnston@abcsupply.com) requests Approve as Submitted.

Commenter's Reason: I move full support representing the International Hurricane Protection Association.

Impact Protective Devices (IPD's) generally carry nearly identical appearances and clear labeling ensures proper identification by all interested parties from building officials, insurance mitigation specialists as well as dwelling owners. The vast majority of manufacturers of IPD's already have this process in place so there is virtually no additional cost to industry.

RB259-16

RB265-16
IRC: R702.3.3.

Proposed Change as Submitted

Proponent : Jon-Paul Cardin, American Iron and Steel Institute, representing American Iron and Steel Institute (JCardin@steel.org)

2015 International Residential Code

Revise as follows:

R702.3.3 Cold-formed steel framing. Cold-formed steel framing supporting gypsum board and gypsum panel products shall be not less than $1^1/_4$ inches (32 mm) wide in the least dimension. Nonload-bearing cold-formed steel framing shall comply with AISI S220 ~~and ASTM C645, Section 10~~. Load-bearing cold-formed steel framing shall comply with AISI ~~S200 and ASTM C 955, Section 8~~ S240.

Reference standards type: This reference standard is new to the ICC Code Books
Add new standard(s) as follows:
AISI S240-15, North American Standard for Cold-Formed Steel Structural Framing (2015)
Standards Available for free download at www.aisistandards.org

Reason: This proposal is one in a series intended to update the content of the cold-formed steel (CFS) light-framed construction provisions of the IRC. The screw penetration test, as referenced to ASTM C645, Section 10, has been incorporated into AISI S220-15, *North American Standard for Cold-Formed Steel Framing - Non-Structural Members*. Therefore, the reference to AISI S220 is adequate to cover those requirements.
In addition, this section previously referenced AISI S200 for load-bearing cold-formed steel framing. However, the new standard **AISI S240**, *North American Standard for Cold-Formed Steel Structural Framing*, addresses requirements for construction with cold-formed steel structural framing that are common to prescriptive and engineered light frame construction. This comprehensive standard was formed by merging the following AISI standards:

- AISI S200, *North American Standard for Cold-Formed Steel Framing-General Provisions*
- AISI S210, *North American Standard for Cold-Formed Steel Framing–Floor and Roof System Design*
- AISI S211, *North American Standard for Cold-Formed Steel Framing–Wall Stud Design*
- AISI S212, *North American Standard for Cold-Formed Steel Framing–Header Design*
- AISI S213, *North American Standard for Cold-Formed Steel Framing– Lateral Design*
- AISI S214, *North American Standard for Cold-Formed Steel Framing–Truss Design*

Consequently, AISI S240 supersedes all previous editions of the above mentioned individual AISI standards and is the correct reference for this application.

The additional screw penetration test, as referenced to ASTM C955 Section 8, is intended for load-bearing CFS framing members. Through the ANSI approved process of developing AISI S240-15, it was the consensus of the AISI Committee on Framing Standards that the screw penetration test was not necessary for load-bearing CFS framing members. The basis of the determination is that the test never produced a failed result for the thickness of members used in structural framing applications. Therefore, the screw penetration test of ASTM C955 Section 8 was not included in AISI S240-15, and is not required as a separate reference in this section of the IRC.

Cost Impact: Will not increase the cost of construction
This proposal is intended to update the referenced AISI standards and does not effect the intended prescribed construction requirements.

Analysis: A review of the standard(s) proposed for inclusion in the code,AISI 240-15, with regard to the ICC criteria for referenced standards (Section 3.6 of CP#28) will be posted on the ICC website on or before April 1, 2016.

RB265-16 :
R702.3.3-
CARDIN11438

Public Hearing Results

Committee Action: **Approved as Submitted**

Committee Reason: The committee approved this proposal based on the proponents published reason statement. The new standard merged 6 standards into one and eliminated the need to reference some standards since the requirements are in the new standard..

Assembly Action: **None**

Individual Consideration Agenda

Public Comment 1:

Proponent : Mike Fischer, Kellen, representing The Gypsum Association (mfischer@kellencompany.com) requests Approve as Modified by this Public Comment.

Modify as Follows:

2015 International Residential Code

R702.3.3 Cold-formed steel framing. Cold-formed steel framing supporting gypsum board and gypsum panel products shall be not less than $1^1/_4$ inches (32 mm) wide in the least dimension. Nonload-bearing cold-formed steel framing shall comply with AISI S220 and ASTM C645, Section 10. Load-bearing cold-formed steel framing shall comply with AISI S240 and ASTM C 955 Section 8.

Commenter's Reason: The original proposal replaces AISI S200 with newly completed AISI S240-15. The Gypsum Association members support the inclusion of the revised standards, but want to retain the current ASTM referenced standards, ASTM C645 and ASTM C955. The proponent's reason statement indicates AISI S220 incorporates the requirements for fastener penetration of the current version of ASTM C645, but the Gypsum Association is concerned that future versions of both standards may not be aligned, and that the IRC should retain both.
The reason statement justifies the removal of the current reference to ASTM C955, Section 8, because "it was the consensus of the AISI Committee on Framing Standards that the screw penetration test was not necessary for load-bearing CFS framing members. The basis of the determination is that the test never produced a failed result for the thickness of members used in structural framing applications."

The Gypsum Association is concerned that removing the screw penetration requirements in ASTM C955 could have an adverse effect on the performance of gypsum fasteners, resulting in screw spin-outs and additional penetrations in the boards, which can compromise the integrity of the boards.

RB265-16

RB266-16

IRC: R702.7, R702.7 (New), R702.7.1, R702.7.2, R702.7.2 (New), R702.7.3.

Proposed Change as Submitted

Proponent : Edward Keith, representing APA- The Engineered Wood Association (ed.keith@apawood.org)

2015 International Residential Code

Add new text as follows:

R702.7 Vapor retarders. The control of vapor diffusion to prevent the accumulation of condensation and moisture in the exterior wall assembly shall be provided by vapor retarders in accordance with Section R702.7.1, R702.7.2 or R702.7.3. The vapor retarder class shall be based on the manufacturer's certified testing or a tested assembly.

The following shall be deemed to meet the class specified:
Class I: Sheet polyethylene, unperforated aluminum foil or other approved vapor retarder materials with a perm rating of less than or equal to 0.1.
Class II: Kraft-faced fiberglass batts or other approved vapor retarder materials with a perm rating greater than 0.1 and less than or equal to 1.0.
Class III: Latex or enamel paint, applied in accordance with the manufacturer's recommendations, or other approved vapor retarder materials with a perm rating greater than 1.0 and less than or equal to 10.0.

Revise as follows:

~~**R702.7**~~ **R702.7.1** ~~**Vapor**~~ **Class I vapor retarders.** Class I ~~or II~~ vapor retarders ~~are~~ shall be required on the interior side of frame walls in Climate Zones 5, 6, 7, 8 and Marine 4.

Exceptions:

1. Basement walls.
2. Below-grade portion of any wall.
3. Construction where moisture or its freezing will not damage the materials.

Class I vapor retarders shall not be permitted on the interior side of frame walls for the following:
1. In Climate Zones 1, 2, 3 and 4.
2. In Climate Zones 5, 6, 7, 8 and Marine 4 where continuous insulation with a perm rating of less than 1.0 is applied on the exterior side of frame walls.
3. In Climate Zones 5, 6, 7, 8 and Marine 4 where Class II vapor retarders are applied on the interior side of frame walls.

Add new text as follows:

R702.7.2 Class II vapor retarders. Class II vapor retarders shall be permitted on the interior side of frame walls in Climate Zones 3 through 8, and Marine 4. Class II vapor retarders shall not be permitted on the interior side of frame walls in Climate Zones 1 and 2.

Revise as follows:

~~**R702.7.1**~~ **R702.7.3 Class III vapor retarders.** Class III vapor retarders shall be permitted on the interior side of frame walls in Climate Zones 1, 2, 3 and 4. Class III vapor retarders shall be permitted on the interior side of frame walls in Climate Zones 5, 6, 7, 8 and Marine 4 where any one of the conditions in Table ~~R702.7.1~~ R702.7.3 is met.

TABLE ~~R702.7.1~~ R702.7.3
CLASS III VAPOR RETARDERS

CLIMATE ZONE	CLASS III VAPOR RETARDERS PERMITTED FOR:[a]
Marine 4	Vented cladding over wood structural panels.
	Vented cladding over fiberboard.
	Vented cladding over gypsum.
	Continuous insulation with *R*-value ≥ 2.5 over 2 × 4 wall.
	Continuous insulation with *R*-value ≥ 3.75 over 2 × 6 wall.
5	Vented cladding over wood structural panels.
	Vented cladding over fiberboard.
	Vented cladding over gypsum.
	Continuous insulation with *R*-value ≥ 5 over 2 × 4 wall.
	Continuous insulation with *R*-value ≥ 7.5 over 2 × 6 wall.
6	Vented cladding over fiberboard.
	Vented cladding over gypsum.
	Continuous insulation with *R*-value ≥ 7.5 over 2 × 4 wall.
	Continuous insulation with *R*-value ≥ 11.25 over 2 × 6 wall.

7 and 8	Continuous insulation with *R*-value ≥ 10 over 2 × 4 wall.
	Continuous insulation with *R*-value ≥ 15 over 2 × 6 wall.

For SI: 1 pound per cubic foot = 16 kg/m^3 .

a. Spray foam with a maximum permeance of 1.5 perms at the installed thickness, applied to the interior cavity side of wood structural panels, fiberboard, insulating sheathing or gypsum is deemed to meet the continuous insulation requirement where the spray foam *R*-value meets or exceeds the specified continuous insulation *R*-value.

Delete without substitution:

~~**R702.7.2 Material vapor retarder class.** The vapor retarder class shall be based on the manufacturer's certified testing or a tested assembly.~~

~~The following shall be deemed to meet the class specified:~~

~~Class I: Sheet polyethylene, unperforated aluminum foil.~~

~~Class II: Kraft-faced fiberglass batts.~~

~~Class III: Latex or enamel paint.~~

Revise as follows:

~~**R702.7.3**~~ **R702.7.4 Minimum clear airspaces and vented openings for vented cladding.** For the purposes of this section, vented cladding shall include the following minimum clear airspaces. Other openings with the equivalent vent area shall be permitted.

1. Vinyl lap or horizontal aluminum siding applied over a weather-resistive barrier as specified in Table R703.3(1).
2. Brick veneer with a clear airspace as specified in Table R703.8.4.
3. Other approved vented claddings.

Reason: This proposal reorganizes and clarifies the vapor retarder sections and addresses a significant technical shortfall on which the IRC is currently silent. In terms of reorganization of the section, the primary reason for the use of vapor retarders has been moved to the beginning of Section 702.7. It is important to give reason for the use of vapor retarders and to define the various classes prior to setting their requirements. Even though the vapor retarder classes are defined in Chapter 2 of the 2015 IRC, it is useful for the user to have direct access to the vapor retarder ranges for each class. This proposal also addresses the previously vague requirement for Class III vapor retarders by requiring that use of latex or enamel paint as a material that meets the class be applied according to the manufacturers' recommendations. Studies have shown that when paints intended to function as Class III vapor retarders are not installed per the manufacturer's recommendations, they can actually result in perm ratings well above the upper limit of 10 perms. The addition of this language will help minimize potential performance issues in the field.

The second major reorganization of the vapor retarder section is the separation of each vapor retarder class into individual sections to improve clarity and to minimize confusion. Doing so clearly defines the unique requirements for each vapor retarder class separately in order to eliminate ambiguity. For instance, Section R702.7.1 in the 2015 IRC combines Class I and II vapor retarders into a single requirement, which may cause confusion. Class I and Class II vapor retarders exhibit very different performance characteristics. In certain cases, a Class II vapor retarder can easily have 10 times, or more, the vapor permeance of a Class I vapor retarder.

The primary technical change involves additional limitations on Class I vapor retarders. The added limitations prevent low vapor permeance materials from being used on both the interior and exterior side of frame walls, creating a "trap" for moisture that has penetrated the wall assembly. In such cases, the drying potential of the wall assembly is significantly reduced. The drying potential concept is based on recommendations through research conducted by Gatland (2010), Lstiburek (2006), and the HIRL Report No. 5932.001_08142014 (2015). The 2015 IRC does not address this important issue; however, it is addressed in Section 1405.4.2 of the 2015 IBC. In comparison, this proposal is similar to the current requirements in the 2015 IBC, but allows for the use of Class II vapor retarders in conjunction with a continuous insulation layer with a vapor permeance of less than 1.0 in Climate Zones 5, 6, 7, 8 and Marine 4.

In addition to the technical change above, this proposal clearly states the classes of vapor retarders that can or cannot be used in all climate zones. This proposal clearly states that Class I vapor retarders shall not be used in Climate Zones 1, 2, 3 and 4, and that Class II vapor retarders shall be not used in Climate Zones 1 and 2, which coincides with the requirements in the 2015 IBC. Furthermore, this proposal fills the explicit requirement gaps for Class II vapor retarders in Climate Zones 3 and 4, as well as Class III vapor retarders in Climate Zones 1, 2, 3 and 4. These additional requirements are not explicitly addressed in the 2015 IRC and is thus open for interpretation and possible misuse.

Bibliography: Gatland, Stanley D., II. "Vapor Retarders Play Crucial Role in Building Envelope Moisture Management Strategies." Interface (2010): 34-37. Apr. 2010. Web. 2 Dec. 2015.

MOISTURE PERFORMANCE OF WALLS IN ENERGY EFFICIENT HOMES. Rep. No. 5932.001_08142014. Home Innovation Research Labs, 15 Sept. 2015. Web. 2 Dec. 2015. .

Lstiburek, Joseph. "BSD-106: Understanding Vapor Barriers." Building Science Corporation. Building Science Corporation, 24 Oct. 2006. Web. 02 Dec. 2015.

Cost Impact: Will not increase the cost of construction
This code change will not increase the cost of construction as it reorganizes and clarifies the original code provisions.

RB266-16 :
R702.7 (NEW)-
KEITH12153

Public Hearing Results

Committee Action: **Approved as Modified**

Modification:

R702.7 Vapor retarders. The control of vapor diffusion to prevent the accumulation of condensation and moisture in the exterior wall assembly shall be provided by vapor retarders in accordance with Section R702.7.1, R702.7.2 or R702.7.3. The vapor retarder class shall be based on the manufacturer's certified testing or a tested assembly.

The following shall be deemed to meet the class specified:
Class I: Sheet polyethylene, unperforated aluminum foil or other approved vapor retarder materials with a perm rating of less than or equal to 0.1.
Class II: Kraft-faced fiberglass batts, latex or enamel vapor retarder paint applied in accordance with the manufacturer's recommendations, or other approved vapor retarder materials with a perm rating greater than 0.1 and less than or equal to 1.0.
Class III: Latex or enamel paint, applied in accordance with the manufacturer's recommendations, or other approved vapor retarder materials with a perm rating greater than 1.0 and less than or equal to 10.0.

R702.7.1 Class I vapor retarders. Class I vapor retarders shall be required on the interior side of frame walls in Climate Zones 5, 6, 7, 8 and Marine 4.

- **Exceptions:**
  1. Basement walls.
  2. Below-grade portion of any wall.
  3. Construction where ~~moisture~~ accumulation, condensation or ~~its~~ freezing of moisture will not damage the materials.

Class I vapor retarders shall not be permitted on the interior side of frame walls for the following:
1. In Climate Zones 1, 2, 3 and 4.
2. ~~In Climate Zones 5, 6, 7, 8 and Marine 4 where continuous insulation with a perm rating of less than 1.0 is applied on the exterior side of frame walls.~~
~~3.~~ In Climate Zones 5, 6, 7, 8 and Marine 4 where Class II vapor retarders are applied on the interior side of frame walls.

Committee Reason: With the three modifications added this proposal improves how vapor retarders are to be applied in the code and will benefit builders and homeowners going forward. The modifications improves the language in exception 3 for types of moisture, adds language to allow latex paint as a Class II and eliminates the conflict for Climate Zones 5,6,7,8 and Marine 4 where continuous insulation with a perm rating of less than 1.0 is used.

Assembly Action: **None**

Individual Consideration Agenda

Public Comment 1:

Proponent : Charles Cottell, representing NAIMA (ccottrel@naima.org) requests Approve as Modified by this Public Comment.

Further Modify as Follows:

2015 International Residential Code

R702.7.2 Class II vapor retarders. Class II vapor retarders, including kraft-faced fiberglass batts, shall be permitted on the

interior side of frame walls in Climate Zones 3 through 8, and Marine 4. Class II vapor retarders shall not be permitted on the interior side of frame walls in Climate Zones 1 and 2.

Exception: Kraft-faced fiberglass batts shall be permitted to be installed with the kraft-faced vapor retarder on the interior side of frame walls in Climate Zones 1 and 2.

Commenter's Reason: Fiberglass batts with kraft-facing type vapor retarders have been used successfully with the kraft-facing vapor retarders installed on the interior side of walls in Climate Zones 1 through 8 and Marine 4. This public comment is intended to continue to permit this practice which is currently permitted in the code. If RB266-16 is approved without this amendment, it would prohibit the use of fiberglass batts with kraft-facing type vapor retarders from being installed on the interior side of walls in Climate Zones 1 and 2 without any evidence of problems or technical justification.

Public Comment 2:

Proponent : Jay Crandell, P.E., ARES Consulting, representing Foam Sheathing Committee of the American Chemistry Council (jcrandell@aresconsulting.biz) requests Approve as Modified by this Public Comment.

Replace Proposal as Follows:

2015 International Residential Code

R702.7 Vapor retarders. ~~Class I or II~~

A vapor ~~retarders are required~~ retarder shall be provided on the interior side of frame walls in ~~Climate Zones 5, 6, 7, 8 and Marine 4~~ accordance with Table R702.7(1).

Exceptions:

1. Basement walls.
2. Below-grade portion of any wall.
3. Construction where accumulation, condensation, or freezing of moisture ~~or its freezing~~ will not damage the materials.

TABLE 702.7(1)
VAPOR RETARDER OPTIONS

CLIMATE ZONE	VAPOR RETARDER CLASS (SECTION R702.7.1)		
	CLASS I	CLASS II	CLASS III
1,2	Not permitted	Not Permitted	Permitted
3,4 (except Marine 4)	Not Permitted	Permitted	Permitted
Marine 4, 5, 6, 7, 8	Permitted	Permitted	See Table R702.7(2)

TABLE ~~R702.7.1~~ R702.7(2)
CONDITIONS FOR USE OF CLASS III VAPOR RETARDERS

CLIMATE ZONE	CLASS III VAPOR RETARDERS PERMITTED FOR:[a,b]
Marine 4	Vented cladding over wood structural panels.
	Vented cladding over fiberboard.
	Vented cladding over gypsum.
	Continuous insulation with *R*-value ≥ 2.5 over 2 × 4 wall.
	Continuous insulation with *R*-value ≥ 3.75 over 2 × 6 wall.
5	Vented cladding over wood structural panels.
	Vented cladding over fiberboard.
	Vented cladding over gypsum.
	Continuous insulation with *R*-value ≥ 5 over 2 × 4 wall.
	Continuous insulation with *R*-value ≥ 7.5 over 2 × 6 wall.
6	Vented cladding over fiberboard.
	Vented cladding over gypsum.
	Continuous insulation with *R*-value ≥ 7.5 over 2 × 4 wall.
	Continuous insulation with *R*-value ≥ 11.25 over 2 × 6 wall.
7 and 8	Continuous insulation with *R*-value ≥ 10 over 2 × 4 wall.
	Continuous insulation with *R*-value ≥ 15 over 2 × 6 wall.

~~For SI: 1 pound per cubic foot = 16 kg/m^3.~~

a. Spray foam with a maximum permeance of 1.5 perms at the installed thickness, applied to the interior cavity side of wood structural panels, fiberboard, insulating sheathing or gypsum is deemed to meet the continuous insulation requirement where the spray foam *R* -value meets or exceeds the specified continuous insulation *R* -value.

b. Vented cladding includes non-insulated vinyl siding or aluminum siding, brick veneer with a clear airspace as specified in Table R703.8.4, furred siding of any type, and other approved vented claddings.

~~**R702.7.1 Class III vapor retarders.** Class III vapor retarders shall be permitted where any one of the conditions in Table R702.7.1 is met.~~

~~**R702.7.2**~~ **R702.7.1 Material vapor retarder class.** The vapor retarder class shall be based on the manufacturer's certified testing or a tested assembly.

The following shall be deemed to meet the class specified:

Class I: Sheet polyethylene, unperforated aluminum foil or other approved vapor retarder materials with a perm rating of less than or equal to 0.1.

Class II: Kraft-faced fiberglass batts, latex or enamel vapor retarder paint applied in accordance with the manufacturer's recommendations, or other approved vapor retarder materials with a perm rating greater than 0.1 and less than or equal to 1.0.

Class III: Latex or enamel paint, applied in accordance with the manufacturer's recommendations, or other approved vapor retarder materials with a perm rating greater than 1.0 and less than or equal to 10.0.

~~**R702.7.3 Minimum clear airspaces and vented openings for vented cladding.** For the purposes of this section, vented cladding shall include the following minimum clear airspaces. Other openings with the equivalent vent area shall be permitted.~~

~~1. Vinyl lap or horizontal aluminum siding applied over a weather-resistive barrier as specified in Table R703.3(1).~~
~~2. Brick veneer with a clear airspace as specified in Table R703.8.4.~~
~~3. Other approved vented claddings.~~

Commenter's Reason: This public comment further improves the organization of the vapor retarder provisions. The formatting of requirements in RB266 as approved and modified is awkward and, consequently, there are some unintended technical conflicts (see below). This PC addresses these concerns by making the code clearer and more enforceable without changing the technical intent of the original proposal as modified and approved. To provide for the needed formatting improvements and corrections, it was necessary to construct the public comment as a delete and replace proposal.

The following identifies some of the specific problems in RB266 that this public comment fixes. First, the common use of Class II vapor retarders (e.g., Kraft paper facing on batts) is provided only as a permissible solution through an awkward exception to the Class I vapor retarder provisions in the original proposal. This is not good code form and it inappropriately implies a preference for a Class I vapor retarder that may only be used in colder climates (and which may not be the preferred or best solution). Second, the proposal states that a Class I vapor retarder is required in Climate Zone Marine 4, but then later in the same section states that it "shall not be permitted" in Climate Zone 4 (which includes Marine 4). So, in effect, the original modified proposal says that a Class I vapor retarder is required, but others are only permissible. In reality, a vapor retarder is required and all three classes are permissible with different limitations or applicability. This public comment makes this code intention much clearer and the requirements more transparent and easier to enforce by tabulating the requirements. This also allows two sections of the code to be deleted as the requirements are now located in the tables.

In addition, the RB266 proposal added unenforceable and inappropriate commentary language which this public comment removes so the focus remains on the application of prescriptive vapor retarder requirements to control water vapor. For example, Section R702.7 of RB266 requires that vapor retarders "prevent the accumulation of moisture". This commentary-like language presents an impossible performance specification because even properly designed walls have some cyclic seasonal variation in moisture where it accumulates and then dissipates. The goal is to keep it from accumulating too much moisture (in materials or on internal surfaces), not preventing any moisture accumulation which is impossible. As written, RB266 could cause unintended liablity for essentially all types of wall construction and vapor retarder applications.

If this public comment is not approved or the issues identified above are not otherwise corrected, RB266 should be disapproved and RB267 approved instead because it includes better formatting of provisions to avoid the above problems and includes technical improvements (as recognized by the residential committee); a public comment on RB267 also addresses correlation of the two proposals as a mentioned need by the residential committee.

Public Comment 3:

Proponent : Theresa Weston, representing DuPont Building Innovations (theresa.a.weston@dupont.com) requests Approve as Modified by this Public Comment.

Further Modify as Follows:

2015 International Residential Code

R702.7.1 Class I vapor retarders. Class I vapor retarders shall be required on the interior side of frame walls in Climate Zones 5, 6, 7, 8 and Marine 4.

Exceptions:

1. Basement walls.
2. Below-grade portion of any wall.
3. Construction where accumulation, condensation or freezing of moisture will not damage the materials.

Class I vapor retarders shall not be permitted on the interior side of frame walls for the following:
1. In Climate Zones 1, 2, 3 and 4.
2. In Climate Zones 5, 6, 7, 8 and Marine 4 where Class II vapor retarders are applied on the interior side of frame walls.
3. In Climate Zones 5, 6, 7, 8 and Marine 4 where continuous insulation with a perm rating of less than 1.0 is applied on the exterior side of frame walls.

Commenter's Reason: This public comment restores a restriction on class I vapor retarders that was in the original proposal. This provision would restrict double vapor barrier assemblies (ones with vapor retarders on both the exterior and interior of wall assemblies) which have the potential for reducing drying and trapping moisture in the assembly. References which discuss the use of vapor retarders with exterior insulation which include the potential trapping of moisture are listed below. It should be noted that this modification would only restrict class I vapor retarders such as poly film and the more commonly used class II vapor retarders such as kraft paper could still be used.

Bibliography:

- *Barrier-type EIFS Stucco Systems Found to be Inferior, Removed from Market by Major Manufacturer*,**Texas Builder**, August-September 1996
-
- Weston, T. A. , "*Using Hygrothermal Simulation to Assess Risk of Water Accumulation from Wall Assembly Defects"*, **ASTM Special Technical Publication 1549 Building Walls Subject to Water Intrusion and Accumulation: lessons form the past and Recommentations for the Future**, ASTM 2014.
-
- Deslarlais, Andre and David Johnston, "*Energy and Moisture Impact of Exterior Insulatio and Finish Walls in the United States",* **ASTM Special Technical Publicaton 1585 Exterior Insulation and Finish Systems (EIFS): Performance, Progress and Innovation***,* ASTM 201

Public Comment 4:

Proponent : Borjen Yeh, representing APA - The Engineered Wood Association (borjen.yeh@apawood.org); Edward Keith (ed.keith@apawood.org) requests Approve as Modified by this Public Comment.

Further Modify as Follows:

2015 International Residential Code

R702.7.1 Class I vapor retarders. Class I vapor retarders shall be required on the interior side of frame walls in Climate Zones 5, 6, 7, 8 and Marine 4.

Exceptions:

1. Basement walls.
2. Below-grade portion of any wall.
3. Construction where accumulation, condensation or freezing of moisture will not damage the materials.

Class I vapor retarders shall not be permitted on the interior side of frame walls for the following:
1. In Climate Zones 1, 2, 3 and 4.
2. In Climate Zones 5, 6, 7, 8 and Marine 4 where Class II vapor retarders are applied on the interior side of frame walls.
3. In Climate Zones 5, 6, 7, 8 and Maine 4 where Class I or Class II vapor retarders are applied on the exterior side of frame walls.

Commenter's Reason: We are in support of the committee action (approved as modified) at the last Committee Action Hearing on our original change proposal RB266-16 except that the drying potential due to water leakage or condensation was not addressed by the approved modified proposal. This is because "double vapor retarders" can result from the use of a Class I vapor retarder in the interior, and a Class I or Class II vapor retarder in the exterior. The double vapor retarders can cause wood to decay in the wall. This public comment aligns with Section 1405.3.2 of the 2015 IBC, as shown below, and will help resolve this concern. It also does not call out "continuius insulation" that was raised in opposing comments at the last Committee Action Hearing.
Section 1405.3.2 of the 2015 IBC states:

"**1405.3.2 Class III vapor retarders**. Class III vapor retarders shall be permitted where any one of the conditions in Table 1405.3.2 is met. Only Class III vapor retarders shall be used on the interior side of frame walls where foam plastic insulating sheathing with a perm rating of less than 1 is applied in accordance with Table 1405.3.2 on the exterior side of the frame wall."

Please support this public comment to further modify the change proposal to avoid a construction condition favorable to wood deacy problems.

Proponent : John Woestman, representing Kellen Company, representing Extruded Polystyrene Foam Association (XPSA) (jwoestman@kellencompany.com) requests Disapprove.

Commenter's Reason: Subsequent to the Committee Hearings, we've re-analyzed RB266 "As Modified" by the committee. Simply put, RB266 should be disapproved in either the "As Modified" or "As Submitted" version. We agree with the proponent this section of the IRC (R702.7) would benefit from reorganization and clarification, but RB266 misses that goal:
1) The formatting of requirements "As modified" or "As Submitted" is awkward and, consequently, there are unintended technical conflicts (see below).
2) The proposed language "As Modified" for Class I vapor retarders in R702.7.1 is confusing. It is not clear if the text "Class I vapor retarders shall not be permitted on the interior side of frame walls for the following" and Items 1 and 2 are intended to be appended to the existing exception or are intended as additional provisions. For example, if "Class I vapor retarders shall not be permitted on the interior side of frame walls . . . . in Climate Zones 1, 2, 3 and 4" is intended to be appended to the exception, this phrase is not needed for other than Marine 4 because the charging language in R702.7.1 has requirements for only CZs 5, 6, 7, 8, and Marine 4. On the other hand, if "Class I vapor retarders shall not be permitted on the interior side of frame walls . . . . in Climate Zones 1, 2, 3, and 4" is intended to be provisions (and not an exception), then there's a conflict with CZ Marine 4 as the charging language requires a Class I vapor retarder, and this provision does not permit same.
3) The use of a common Class II vapor retarder – batt insulation faced with Kraft paper – is provided only through an awkward exception to the Class I vapor retarder requirements in R702.7.1 and subsequent "shall be permitted" language in R702.7.2. This is not good code formatting and inappropriately implies a preference for Class I vapor retarders in colder climates, which may not be the preferred or best solution.
4) The requirements for Class III vapor retarders, in Section R702.7.3, could be interpreted as implying that the use of any latex or enamel paint (a Class III vapor retarder) applied per the manufacturer's recommendations to the interior of the walls is limited to construction where the walls are constructed per one of the options in Table R702.7.3 (renumbered by this proposal) in climate zones 5, 6, 7, 8, and Marine 4. The flip side of this provision could be interpreted that walls constructed differently than allowed in Table R702.7.3 in climate zones 5, 6, 7, 8, and Marine 4 cannot be painted with latex or enamel paint. We know the intent of the IRC is not to limit use of latex or enamel paint when it is not fulfilling the role of a Class III vapor retarder in CZ's 5, 6, 7, 8, and Marine 4 R702.7.3, but that technically, is what this language implies. Perhaps a work-around is to apply the latex or enamel paint in a manner not consistent with the manufacturer's instructions. Then, technically, the latex or enamel paint is not a Class III vapor retarder, and any wall construction which meets all other requirements in the IRC could be utilized (and a Class I or Class II vapor retarder would be required per R702.7.1 and R702.7.2). We recognize this is a flaw of the current IRC, but RB266 misses clarifying this language.

Regarding RB266 "As Submitted", we had a major concern with proposed Item 2 of section R702.7.1, which is why a floor modification was proposed, and approved by the committee deleting Item 2.
Explanation: in CZs 5, 6, 7, 8, and Marine 4 (the heating dominated climate zones), it is inappropriate to place a permeance limit on continuous insulation when the real concern is simply having enough continuous insulation to keep the wall warm to prevent moisture accumulation (i.e., the insides of the wall assembly are kept above the dew point). Consequently, experience, research, and field studies in the US and Canada (and also recognized in the Canadian code) have consistently demonstrated that walls with adequate amount of continuous insulation (even if less than 1 perm) result in walls that stay warm and dry. In fact, such walls are included in the Canadian Wood Council's wall thermal calculator. In complete contradiction to the original RB266 proposal which focused this concern on continuous insulation, however, a permeance limit for exterior sheathing is a legitimate building science concern for walls with non-insulating sheathings (not protected by exterior continuous insulation) that get very cold and thus have much potential moisture accumulation during the winter in and on the sheathing material. Here

fast drying in the Spring/Summer is important to prevent mold, even though the high moisture levels in the winter may cause some structural degradation of the sheathing over time. Thus, the proposal as originally written lacked a basic and complete technical understanding of different methods to control moisture accumulation in walls in combination with the use of vapor retarders and completely misplaced the concern on continuous insulation which has proven to be a "best practice" solution for reasons described above.

In light of the above concerns which need to be corrected, RB266 is "not ready for prime time" and should be disapproved. An alternative to RB266 is RB267. RB267 proposes and introduces clearer formatting of provisions and requirements of which vapor retarders are required and / or permitted. The technical improvements of RB267 were recognized by the residential committee at the committee hearing, but not approved because of previous action on RB266. This public comment suggests reversing the priority by approving RB267, and disapproving RB266.

RB266-16

RB267-16

IRC: , R702.7, R702.7.1, R702.7.1 (New), R702.7.2, R702.7.3.

Proposed Change as Submitted

Proponent : Jay Crandell, P.E., ARES Consulting.biz, representing Foam Sheathing Committee of the American Chemistry Council (jcrandell@aresconsulting.biz)

2015 International Residential Code

Revise as follows:

R702.7 Vapor retarders. ~~Class I~~

Vapor retarders as described in Section R702.7.3 shall be provided in accordance with Section R702.7.1 or ~~II vapor retarders are required on the interior side of frame walls~~ Section R702.7.2, or in ~~Climate Zones 5, 6, 7, 8 and Marine 4~~ accordance with an approved design using accepted engineering practice for hygrothermal analysis.

Exceptions:

1. Basement walls.
2. Below-grade portion of any wall.
3. Construction where moisture or its freezing will not damage the materials.

Add new text as follows:

R702.7.1 Class I and II vapor retarders. A Class I or II vapor retarder shall be required on the interior side of frame walls in Climate Zones 5, 6, 7, 8 and Marine 4. In Climate Zones 5 through 8, the application of a Class I or II vapor retarder shall comply with one of the following conditions:

1. Sheathing, water-resistive barrier, and other material layers located between the wall cavity and cladding shall have a water vapor permeance of 3 perms or greater as measured in accordance with ASTM E96 (Method A or B), or
2. Continuous insulation shall be located on the exterior side of the frame wall and the minimum R-value shall comply with Table R702.7.1.

Class I vapor retarders shall not be permitted on the interior side of frame walls in Climate Zones 1, 2, 3, and 4 except Marine 4. Class II vapor retarders shall not be permitted on the interior side of frame walls in Climate Zones 1 and 2.

TABLE R702.7.1

ACCEPTABLE INSULATION COMPONENT R-VALUES AND INSULATION RATIOS FOR USE WITH A CLASS I OR II VAPOR RETARDER

Climate Zone per Section N1101.7	Maximum Heating Degree Days (65ºF basis)	Minimum Insulation Ratio[a]	Acceptable Insulation R-values (Cavity+Continuous)[b,c]	
			2x4 Walls	2x6 Walls
5, 6	9,000	0.2	R-13 + R-2.6ci R-15 + R-3.0ci	R-20 + R-4.0ci R-21 + R-4.2ci
7	12,600	0.35	R-13 + R-4.6ci R-15 + R-5.3ci	R-20 + R-7.0ci R-21 + R-7.4ci
8[d]	16,200[d]	0.5	R-13 + R-6.5ci R-15 + R-7.5ci	R-20 + R-10ci R-21 + R-10.5ci

For SI: 1 heating degree day (65ºF basis) = 0.56 heating degree days (18ºC basis)

a. Insulation ratio is determined by dividing the continuous insulation (ci) R-value by the cavity insulation R-value. Alternate acceptable insulation R-values shall be permitted provided the insulation ratio meets or exceeds the required minimum insulation ratio. Interpolation between the maximum heating degree day values shall be permitted to derive a minimum insulation ratio corresponding to a site-specific heating degree day value.

b. Continuous insulation (ci) R-values are minimums for use with the indicated cavity insulation R-value. Cavity insulation R-values are maximums for use with the indicated continuous insulation R-values.

c. In addition to the vapor retarder, spray foam with a maximum permeance of 1.5 perms at the installed thickness, applied to the interior cavity side of wood structural panels, fiberboard, insulating sheathing or gypsum is deemed to meet the continuous insulation requirement where the spray foam R-value plus any continuous insulation R-value meets or exceeds the indicated continuous insulation R-value.

d. Where the heating degree day limit is exceeded in Climate Zone 8, a design shall be required to determine the minimum insulation ratio and acceptable insulation R-values.

~~**R702.7.1**~~ **R702.7.2 Class III vapor retarders.** Class III vapor retarders shall be permitted in Climate Zones 1, 2, and 3 and where any one of the conditions in Table ~~R702.7.1~~ R702.7.2 is met.

Revise as follows:

TABLE ~~R702.7.1~~ R702.7.2
CLASS III VAPOR RETARDERS

CLIMATE ZONE	CLASS III VAPOR RETARDERS PERMITTED FOR:[a,b]
4 and Marine 4	Vented cladding over wood structural panels.
	Vented cladding over fiberboard.
	Vented cladding over gypsum.
	Continuous insulation with *R*-value ≥ 2.5 over 2 × 4 wall.
	Continuous insulation with *R*-value ≥ 3.75 over 2 × 6 wall.
5	Vented cladding over wood structural panels.
	Vented cladding over fiberboard.
	Vented cladding over gypsum.
	Continuous insulation with *R*-value ≥ 5 over 2 × 4 wall.
	Continuous insulation with *R*-value ≥ 7.5 over 2 × 6 wall.
6	Vented cladding over fiberboard.
	Vented cladding over gypsum.
	Continuous insulation with *R*-value ≥ 7.5 over 2 × 4 wall.
	Continuous insulation with *R*-value ≥ 11.25 over 2 × 6 wall.
7 ~~and 8~~	Continuous insulation with *R*-value ≥ 10 over 2 × 4 wall.
	Continuous insulation with *R*-value ≥ 15 over 2 × 6 wall.
8	See Section R702.7.1

~~For SI: 1 pound per cubic foot = 16 kg/m^3.~~

a. Spray foam with a maximum permeance of 1.5 perms at the installed thickness, applied to the interior cavity side of wood structural panels, fiberboard, insulating sheathing or gypsum is deemed to meet the continuous insulation requirement where the spray foam *R* -value meets or exceeds the specified continuous insulation *R* -value.
b. Vented cladding shall include non-insulated vinyl siding or aluminum siding, brick veneer with a clear airspace as specified in Table R703.8.4, furred siding of any type, and other approved vented claddings.

~~R702.7.2~~ R702.7.3 Material vapor retarder class. The vapor retarder class shall be based on the manufacturer's certified testing or a tested assembly.

The following shall be deemed to meet the class specified:

Class I: Sheet polyethylene, unperforated aluminum foil with a perm rating of less than or equal to 0.1.

Class II: Kraft-faced fiberglass batts with a perm rating greater than 0.1 and less than or equal to 1.0.

Class III: Latex or enamel paint with a perm rating of greater than 1.0 and less than or equal to 10.0 installed in accordance with the paint manufacturer's installation instructions to achieve the required perm rating.

Delete without substitution:

~~**R702.7.3 Minimum clear airspaces and vented openings for vented cladding.** For the purposes of this section, vented cladding shall include the following minimum clear airspaces. Other openings with the equivalent vent area shall be permitted.~~

1. ~~Vinyl lap or horizontal aluminum siding applied over a weather-resistive barrier as specified in Table R703.3(1).~~
2. ~~Brick veneer with a clear airspace as specified in Table R703.8.4.~~
3. ~~Other approved vented claddings.~~

Reason: This proposal better organizes the vapor retarder section of the IRC in a manner similar to that done last code cycle for the 2015 IBC by this proponent with modifcation and/or support by several interested parties. Significant effort and review of this proposal was also devoted to keeping this proposal as simple as possible without sacrificing important building science principles needed to ensure reasonably reliable and consistent performance, enforcement, and use. This proposal also addresses a commonly understood need to ensure that the water vapor control provisions of the building code are updated to adequately address modern wall materials and methods as well as advanced insulation requirements in the energy code.
In Section R702.7.1, the proposal clarifies and enhances the applicability of Class I and II vapor retarders without exclusion or preference to materials or methods of construction for common wall assemblies. For example, in the colder climate zones, a minimum 3 perm water vapor permeance requirement is provided as one option for the exterior sheathing, water-resistive barrier materials, and other materials between the wall cavity and cladding (which may include the more vapor-permeable types of exterior insulation). This option for compliance ensures adequate coordination of interior vapor resistance and exterior vapor permeance to help avoid excessive moisture accumulations. To accommodate various typical sheathing materials that act as "smart vapor retarders", such as OSB and plywood, the provision permits the permeance to be based on the wet-cup (Method B) procedure of ASTM E96. This is confirmed by data reported in the literature, included in databases used for hygrothermal analysis (e.g., WUFI), and used in studies by the Home Innovation Research Labs and also USDA Forest Products Labs which

indicate a wet-cup permeance of 3.8 perms for typical 7/16" OSB (HIRL, 2013). In addition, APA The Engineered Wood Association technical literature indicates that 7/16" OSB has a wet-cup water vapor permeance of greater than 5 perms (and 15/32" plywood greater than 10 perms) (APA, 2009). In addition, many common water-resistive barrier materials, such as house wraps, are vapor permeable (i.e., 5 perms or greater). Thus, common successful materials and applications are not excluded by this proposal.

A second option for compliance in Section R702.7.1 is provided specifically for walls with exterior continuous insulation (particularly those less than 3 perms and not able to comply with the first option). This second option relies on compliance with a minimum continuous insulation R-value or insulation ratio (Table R702.7.1) to control water vapor by keeping the interior of the wall sufficiently warm (e.g., above dew point).

Both compliance options described above are needed to help ensure poor performing conditions are avoided where the code is currently silent and documented moisture problems have occured in practice. Both approaches adhere closely to tried and true methods that have been in practice successfully for more than 20 years in the Canadian National Building Code and the U.S. practice (although not yet formally recognized in U.S. model codes). These methods and numerous sources of data and research have been reviewed and analyzed to help inform the developement of this proposal (ABTG, 2015).

In Section R702.7.2, the provisions for Class III vapor retarders are unchanged with the exception of clarifying that they also are permitted in Climate Zones 1, 2, and 3. In Table R702.7.2, Climate Zone 4 is include to address an ommision when the table was first added to the IRC (and also to agree with more recent data per ABTG, 2015 and other studies). Also, Climate Zone 8 is deferred to Section R702.7.1 (Class I and II vapor retarders). Climate Zone 8 was inappropriately included with Climate Zone 7 as an unintended action when the Class III vapor retarder table was first adopted into the IRC. Other proposals are expected to address appropriate prescriptive solutions for Climate Zone 8 should it be desired to add an appropriate prescriptive solution for use of Class III vapor retarders in Climate Zone 8.

Existing Section R702.7.3 is deleted and incorporated into a simplified foonote 'b' to Table R702.7.2 because vented cladding is only addressed for the purpose of the Class III vapor retarder table.

Existing Section R702.7.2 (renumbered to Section R702.7.3) for vapor retarder material classes is enhanced to be consistent with changes to this provision last code cycle for the 2015 IBC, incorporating the specific vapor permeance ranges for each class of vapor retarder and to ensure compliance of the listed deemed to comply materials (or alternatives). In particular, reference to paint manufacturers' installation instructions is added to ensure proper paint selection and application to achieve the required permeance levels for use of paint as a Class III vapor retarder. Problems in this regard (i.e., paint that is too vapor permeable) has contributed to moisture accumulation problems in walls and wall sheathing as documented in the reviewed literature and experience (refer to ABTG, 2015 and HIRL, 2013).

Bibliography:

ABTG (2015). "Assessment of Water Vapor Control Methods for Modern Insulated Light-Frame Wall Assemblies", Research Report No. ABTG-1410-03, Applied Building Technology Group, LLC, www.appliedbuildingtech.com/rr/1410-03

HIRL (2013). Characterization of the Moisture Performance of Energy-Efficient and Conventional Light-Frame Wood Wall Systems, Home Innovation Research Labs (formerly NAHB Research Center) and Dr. Sam Glass, USDA-Forest Products Lab (Appendix A), www.homeinnovation.com

APA (2009). Water Vapor Permeance of Wood Structural Panels and Wood Wall Construction, Number J450, February 2009, www.apawood.org

Cost Impact: Will not increase the cost of construction

This proposal improves the clarity and effectiveness of vapor retarder requirements without material preference and without excluding common accepted practices. Alternative solutions are also recognized and not excluded. Thus, no cost impact is anticipated and reduction of long-term costs due to improved resiliency and avoided moisture problems is expected.

RB267-16 :
R702.7-
CRANDELL12987

Public Hearing Results

Committee Action: **Disapproved**

Committee Reason: This proposal has many improvements but based on the prior action on RB266-16 it would be difficult to correlate. The committee prefers RB266-16.

Assembly Action: **None**

Individual Consideration Agenda

Public Comment 1:

Proponent : Jay Crandell, P.E., ARES Consulting, representing Foam Sheathing Committee of the American Chemistry Council (jcrandell@aresconsulting.biz) requests Approve as Modified by this Public Comment.

Modify as Follows:

2015 International Residential Code

R702.7.3 Material vapor retarder class. The vapor retarder class shall be based on the manufacturer's certified testing or a tested assembly.

The following shall be deemed to meet the class specified:

Class I: Sheet polyethylene, unperforated aluminum foil or other approved vapor retarder materials with a perm rating of less than or equal to 0.1.

Class II: Kraft-faced fiberglass batts , latex or enamel paint applied in accordance with the manufacturer's recommendations, or other approved vapor retarder materials with a perm rating greater than 0.1 and less than or equal to 1.0.

Class III: Latex or enamel paint , applied in accordance with the manufacturer's recommendations, or other approved vapor retarder materials with a perm rating of greater than 1.0 and less than or equal to 10.0 ~~installed in accordance with the paint manufacturer's installation instructions to achieve the required perm rating~~.

Commenter's Reason: The residential building committee recognized that the RB267 proposal "has many improvements" that could not be correlated during the code development hearing. Unfortunately, this has left the code with gaps or incomplete information. This proposal addresses gaps in the current code (and RB266) that are needed to more completely coordinate water vapor retarders with other parts of the wall assembly, including materials on the exterior side of the assembly which are known to have a significant effect on performance (see reason statement with the original RB267 proposal). The technical improvements in this proposal have been confirmed and supported by various reviewed research reports and field data, is consistent with common practice and the US, and has been successfully used and recognized in the National Building Code of Canada since 1995 (over 30 years).

The modification proposed in this public comment specifically captures the technical modifications made to RB266 as approved in regard to vapor retarder materials, particularly paints, so that the two proposals are correlated as mentioned by the residential committee. Finally, this proposal improves the formatting and streamlining of the vapor retarder provisions to make them less confusing, more transparent, and more easily enforced. Thus, it avoids the formatting and unintended technical issues in RB266 as described in a separate PC to RB266.

RB267-16

RB270-16

IRC: R702.7, R702.7.1, R702.7.2, R702.7.3.

Proposed Change as Submitted

Proponent : Robert Schwarz, representing EnergyLogic, Inc. (robby@nrglogic.com)

2015 International Residential Code

Add new text as follows:

R702.7 Vapor retarders. Class I or II vapor retarders are required on the interior side of frame walls in Climate Zones 5, 6, 7, 8 and Marine 4.

Exceptions:

1. Basement walls.
2. Below-grade portion of any wall.
3. Construction where moisture or its freezing will not damage the materials.
4. Dry climate zones B

R702.7.1 Class III vapor retarders. Class III vapor retarders shall be permitted in dry climate zones B and where any one of the conditions in Table R702.7.1 is met.

R702.7.2 Material vapor retarder class. The vapor retarder class shall be based on the manufacturer's certified testing or a tested assembly.

The following shall be deemed to meet the class specified:

Class I: Sheet polyethylene, unperforated aluminum foil.

Class II: Kraft-faced fiberglass batts.

Class III: Latex or enamel paint.

R702.7.3 Minimum clear airspaces and vented openings for vented cladding. For the purposes of this section, vented cladding shall include ~~the following~~ a minimum clear ~~airspaces~~ air space that is equal to or greater than 1/4 of an inch. ~~Other openings with the equivalent vent area shall be permitted.~~

1. Vinyl lap or horizontal aluminum siding applied over a weather-resistive barrier as specified in Table R703.3(1).
2. Brick veneer with a clear airspace as specified in Table R703.8.4.
3. In dry climate zones B, vented cladding shall include a minimum clear air space that is equal to or greater than 1/16 of an inch.
4. Other approved vented claddings.

TABLE R702.7.1
CLASS III VAPOR RETARDERS

CLIMATE ZONE	CLASS III VAPOR RETARDERS PERMITTED FOR:[a]
Marine 4	Vented cladding over wood structural panels.
	Vented cladding over fiberboard.
	Vented cladding over gypsum. Vented cladding over a weather resistant barrier.
	Continuous insulation with *R*-value ≥ 2.5 over 2 × 4 wall.
	Continuous insulation with *R*-value ≥ 3.75 over 2 × 6 wall.
5	Vented cladding over wood structural panels.
	Vented cladding over fiberboard.
	Vented cladding over gypsum. Vented cladding over a weather resistant barrier.
	Continuous insulation with *R*-value ≥ 5 over 2 × 4 wall.
	Continuous insulation with *R*-value ≥ 7.5 over 2 × 6 wall.
6	Vented cladding over fiberboard.
	Vented cladding over gypsum. Vented cladding over a weather resistant barrier.
	Continuous insulation with *R*-value ≥ 7.5 over 2 × 4 wall.
	Continuous insulation with *R*-value ≥ 11.25 over 2 × 6 wall.
7 and 8	Continuous insulation with *R*-value ≥ 10 over 2 × 4 wall.
	Continuous insulation with *R*-value ≥ 15 over 2 × 6 wall.

For SI: 1 pound per cubic foot = 16 kg/m^3 .

a. Spray foam with a maximum permeance of 1.5 perms at the installed thickness, applied to the interior cavity side of wood structural panels, fiberboard, insulating sheathing or gypsum is deemed to meet the continuous insulation requirement where the spray foam *R*-value meets or exceeds the specified continuous insulation *R*-value.

Reason: Water is the single largest item that affects a buildings long term durability. Bulk water is only a fraction of the moisture that is at issue. Water in its vapor state is the other. The object of water vapor management is to not trap moisture but rather have as forgiving an assembly as possible with tremendous drying potential. Flexibility is a key component to allow design professionals and applied building science consultant the ability to create assemblies that will not get wet from the poor selection and installation of vapor retarders. This proposal allows flexibility in the use of class III vapor barriers in dry climates where greater drying potential exists as moisture moves from higher concentrations to lower concentration.
A declaration is needed because there are three classes of vapor retarders defined by the code and significant thought needs to go into choosing the correct strategy that will be utilized. There is a national consensus that builders should be moving away from Class 1 poly vapor retarders in all climate zones, yet the code requires specific vapor retarders in in colder climates and makes it difficult to utilize class III retarders. The installation of class I poly vapor retarders often comes down to a mandate by the jurisdiction that is not based on sound building science and does not include and installation inspection or rational why a vapor retarder is required on the main wall section but not at the rim joist. In Colorado fiberglass batt installs tend to require class I poly vapor barriers while blown fiberglass installs do not. The code and the code officials are clearly confused.

Installation of class I vapor retarders is a particular concern around the country as they often trap moisture that bypasses them as more water vapor migrates with air than by the process of diffusion which the retarder is design to stop. Realization that vapor management is not the installation of one component (a vapor retarder) but rather a complex strategy that involves vapor retarders, ventilation systems, tight assemblies, and more, is important. In addition, emphasis and thought needs to be put into the understanding of how what has been installed actually performs.

Another proposal is offered to require a water managment declaration. The water management declaration is designed to get people to understand, train, and think about vapor retarder installation and more broadly about water vapor management. Lastly, it helps ensure not only that the components of the strategy are in place but that they actually work.

Bibliography: BSD-106: Understanding Vapor Barriers
Joseph Lstiburek

http://buildingscience.com/documents/digests/bsd-106-understanding-vapor-barriers
(http://buildingscience.com/documents/digests/bsd-106-understanding-vapor-barriers)

You don't need a Vapor Barrier

Energy Vanguard

Allison Bailes

http://www.energyvanguard.com/blog-building-science-HERS-BPI/bid/54110/You-Don-t-Need-a-Vapor-Barrier-Probably
(http://www.energyvanguard.com/blog-building-science-HERS-BPI/bid/54110/You-Don-t-Need-a-Vapor-Barrier-Probably)

Cost Impact: Will increase the cost of construction
Flexibility generally reduces cost. However, in this case upfront design cost may increase as builders, designers, and consultants work toward a strategized approach rather than a one size solution approach toward moisture management. In this light, cost should increase in the short term but go back down as experience with the declaration becomes normalized.

RB270-16 :
R702.7-
SCHWARZ13813

Public Hearing Results

Committee Action: **Disapproved**

Committee Reason: The committee felt this is a confusing proposal and does not provide any supporting information on the two different venting sizes nor is there any substantiation for the expanded use of a Class III vapor retarders to dry climates.

Individual Consideration Agenda

Public Comment 1:

Proponent : Robert Schwarz, representing EnergyLogic, Inc. (robby@nrglogic.com) requests Approve as Modified by this Public Comment.

Modify as Follows:

2015 International Residential Code

R702.7 Vapor retarders. ~~Class~~ A class I, II, or ~~II~~ III vapor ~~retarders are~~ retarder is required on the interior side of frame walls in Climate Zones 5, 6, 7, 8 and Marine 4 to manage moisture migration into building assemblies via vapor diffusion. House tightness requirements of N1102.4.1.2 shall be utilized to manage moisture migration into building assemblies via air leakage.

Exceptions:

1. Basement walls.
2. Below-grade portion of any wall.
3. Construction where moisture or its freezing will not damage the materials.
4. ~~Dry climate zones B~~

TABLE R702.7.1
CLASS III VAPOR RETARDERS

CLIMATE ZONE	CLASS III VAPOR RETARDERS PERMITTED FOR:[a]
Marine 4	Vented cladding over wood structural panels.
	Vented cladding over fiberboard.
	Vented cladding over gypsum. Vented cladding over a weather resistant barrier.
	Continuous insulation with *R*-value ≥ 2.5 over 2 × 4 wall.
	Continuous insulation with *R*-value ≥ 3.75 over 2 × 6 wall.
5	Vented cladding over wood structural panels.
	Vented cladding over fiberboard.
	Vented cladding over gypsum. Vented cladding over a weather resistant barrier.
	Continuous insulation with *R*-value ≥ 5 over 2 × 4 wall.
	Continuous insulation with *R*-value ≥ 7.5 over 2 × 6 wall.
6	Vented cladding over fiberboard.
	Vented cladding over gypsum. Vented cladding over a weather resistant barrier.
	Continuous insulation with *R*-value ≥ 7.5 over 2 × 4 wall.
	Continuous insulation with *R*-value ≥ 11.25 over 2 × 6 wall.
7 and 8	Continuous insulation with *R*-value ≥ 10 over 2 × 4 wall.
	Continuous insulation with *R*-value ≥ 15 over 2 × 6 wall.

For SI: 1 pound per cubic foot = 16 kg/m^3 .

a. Spray foam with a maximum permeance of 1.5 perms at the installed thickness, applied to the interior cavity side of wood structural panels, fiberboard, insulating sheathing or gypsum is deemed to meet the continuous insulation requirement where the spray foam *R*-value meets or exceeds the specified continuous insulation *R*-value.

R702.7.2 Material vapor retarder class. The vapor retarder class shall be based on the manufacturer's certified testing or a tested assembly.

The following shall be examples deemed to meet the class specified:

Class I: Permeability of less than or equal to 0.1 perm. Examples: Sheet polyethylene, unperforated aluminum foil.

Class II: Permeability of greater than 0.1 and less than or equal to 1 perm. Examples: Kraft-faced fiberglass batts.

Class III: Permeability of greater than or equal to 1 perm. Examples: Latex or enamel paint.

R702.7.3 Minimum clear airspaces and vented openings for vented cladding. For the purposes of this section, vented cladding shall include a minimum clear air space that is equal to or greater than 1/4 of an inch.

1. Vinyl lap or horizontal aluminum siding applied over a weather-resistive barrier as specified in Table R703.3(1).

2. Brick veneer with a clear airspace as specified in Table R703.8.4.
3. ~~In dry climate zones B, vented cladding shall include a minimum clear air space that is equal to or greater than 1/16 of an inch.~~
3. Cladding applied over a weather resistant barrier with a minimum clear air space that is equal to or greater than 1/16 of an inch.
4. Other approved vented claddings.

Commenter's Reason: Proposals RB269 and RB270 have been combined here to better address the committee's comments about clarity. First we have to be clear about the physics. Water vapor is carried into building assemblies by both the process of diffusion and air leakage. Before now only one process of water vapor transport has been addressed by the code. This proposal ensures that there is no confusion and bolsters the need for an appropriate vapor retarder to reduce diffusion and bolsters the need for tight homes by referring to Section N1102.4.1.2 air leakage, to reduce moisture moving into building assemblies from air leakage.

The committee was correct that RB269 inadvertently remove direction on where vapor retarders should be placed and this public comment rectifies that error.

The committee was concerned about lack of supporting documentation for defining a gap size behind ventilated cladding. First, it should be known that the gap size has not been defined in the current code which causes more issue that defining the gap because jurisdiction tend to default to class 1 vapor retarders when class three would be more than adequate. Currently only two examples are provided (a gap associated with vinyl lap or aluminum siding and the gap associated with brick veneer) and the table noted in the code R703.3(1) does not specifically state a gap thickness that needs to be maintained behind vinyl or aluminum siding.

I reduced the venting sizing reverence to one and am using 1/16 of an inch because the research indicates that there are two issues associated with the gap, drainage and ventilation, both of which are addressed with a minimum gap of 1MM. The product that I was able to find that utilized the smallest gap, a crinkled drain wrap, defines a 1/16 of an inch gap which is slightly bigger than 1mm so that is what I chose. We are also seeing that more builders are adopting a Building America technique of installing sill seal vertically over the weather resistant barrier creating a 1/16 of an inch gap. This cost effective and working well to create vented gap between lap siding and weather resistant barriers.

In a publication titled, "Air Cavities Behind Claddings—What Have We Learned" principal author Achilles N. Karagiozis, PhD and which can be found here: http://web.ornl.gov/sci/roofs%2Bwalls/staff/papers/210.pdf (http://web.ornl.gov/sci/roofs%2Bwalls/staff/papers/210.pdf) , it states, " very small 1mm-wide-gap behind the cladding was sufficient to provide drying rates comparable to those attained with top and bottom vents of equal size", in addition it was stated that, "narrower air gap behind fiber cement siding with the air gap open to the outdoors along the whole wall width can easily provide the same venting/ventilation rates in the air gap as in the brick wall cavity." Both conclusions indicate that a minimum code requirement of a 1/16 of an inch gap is more than adequate.

In the conclusion of Dr. Joe Lstiburek's article titled "Mind the Gap" that can be found here: http://buildingscience.com/documents/insights/bsi-038-mind-the-gap-eh (http://buildingscience.com/documents/insights/bsi-038-mind-the-gap-eh) , he states, "The size of the gaps can vary: 3/8 in. (10 mm) is very conservative for drainage, ventilation and diffusion. Even smaller, less than 1/16 in. (2 mm), works for drainage and diffusion redistribution."

Lastly, in the article titled, "The Role of Small Gaps Behind Wall Claddings on Drainage and Drying" by Dr. John Staube he states, "The experiments to date have conclusively shown that even small gaps (less than 1 mm) can drain more water than would normally be found in a drainage gap. It was also found that in some cases small gaps will store less water than a large drainage gap. It was also found that ventilation drying can play a role in very small gaps of approximately 1 mm, at a pressure difference of only 1 Pa." https://www.researchgate.net/publication/242216529_The_Role_of_Small_Gaps_Behind_Wall_Claddings_on_Drainage_and_Drying (https://www.researchgate.net/publication/242216529_The_Role_of_Small_Gaps_Behind_Wall_Claddings_on_Drainage_and_Drying)

The committee's last question concerned the expanded use of class three vapor retarder in dry climate zones. Building science has demonstrated that water vapor moves from warm to less and is dependent on temperature and relative humidity. In dry climate zones the air has low relative humidity the majority of the time that spikes with weather events such as rain storms. Smaller gaps between siding and the weather resistant barrier allow more moisture movement from potential high relative humidly air behind siding to move to the ambient air that has low relative humidity. Intruding in the code the need to install

vented cladding over a weather resistant barrier allows moisture that gets behind the cladding time to dry to the ambient air. All of this being said it appeared to me that dry climate zones no longer needed to be singled out as this proposal allows more flexibility and helps move builders and code jurisdictions to more readily utilize class three vapor retarders. Because of this the dry climate reference was removed.

RB270-16

RB271-16 Part I
IRC: 702.8 (New).

Proposed Change as Submitted

Proponent : Robert Schwarz, representing EnergyLogic, Inc. (robby@nrglogic.com)

2015 International Residential Code

Add new text as follows:

702.8 Vapor management declaration. A vapor management strategy shall be documented on the construction documents. The following shall be addressed:

1. Type and class of vapor retarder used throughout the building, or listed for each assembly, to manage moisture migration by diffusion.
2. Vapor retarder installation scope of work to ensure proper installation.
3. Projected building air leakage rate and testing strategy for whole house infiltration levels in accordance with Section N1102.4.1.2 to manage moister migration by air leakage.
4. Whole house ventilation strategy to be used in accordance with Section M1507.3.
5. Spotor local ventilation strategy to be used in accordance with Section M1507.4.
6. Testing strategy of ventilation system in accordance with Section N1103.6.2 to manage or remove moisture as it is created and to ensure background ventilation moisture control.
7. Testing strategy of total duct leakage in accordance with Section N1103.3.3 to limit moisture migration into building cavities through duct leakage.

Reason: The water management declaration is design to get people to understand, train, and think about vapor retarder installation and more broadly about water vapor management. Lastly, it helps ensure not only that the components of the strategy are in place but that they actually work.

Bibliography: BSD-106: Understanding Vapor Barriers
Joseph Lstiburek
http://buildingscience.com/documents/digests/bsd-106-understanding-vapor-barriers
You don't need a Vapor Barrier
Energy Vanguard
Allison Bailes
http://www.energyvanguard.com/blog-building-science-HERS-BPI/bid/54110/You-Don-t-Need-a-Vapor-Barrier-Probably

Cost Impact: Will increase the cost of construction
Flexibility generally reduces cost. However, in this case upfront design cost may increase as builders, designers, and consultants work toward a strategized approach rather than a one size solution approach toward moisture management. In this light, cost should increase in the short term but go back down as experience with the declaration becomes normalized.

RB271-16 Part I : 702.8 (NEW)-SCHWARZ13823

Public Hearing Results

Part I

Committee Action: **Disapproved**

Committee Reason: This proposal introduces a new concept of vapor management declaration with an extensive list of requirements and it is not clear how to successfully comply. The cost impact does not substantiate how significant the cost increase will be. It is likely that a building scientist will have to be hired to perform this work.

Assembly Action: **None**

Individual Consideration Agenda

Public Comment 1:

Proponent : Robert Schwarz, representing EnergyLogic, Inc. (robby@nrglogic.com) requests Approve as Modified by this Public Comment.

Modify as Follows:

2015 International Residential Code

702.8 Vapor management declaration. A vapor management strategy shall be documented on the construction documents. The following shall be addressed:

1. Type and class of vapor retarder used throughout the building, or listed for each assembly, to manage moisture migration by diffusion.
2. Vapor retarder installation scope of work to ensure proper installation.
3. ~~Projected building air leakage rate and testing strategy for whole house infiltration levels in accordance with Section N1102.4.1.2 to manage moister migration by air leakage.~~
3. Strategy for achieving whole house infiltration requrements in accordance with Section N1102.4.1.2 to manage moister migration by air leakage.
4. Whole house ventilation strategy to be used in accordance with Section M1507.3.
5. ~~Spotor~~ Spot/local ventilation strategy to be used in accordance with Section M1507.4.
6. Testing strategy of ventilation ~~system~~ systems in accordance with Section N1103.6.2 to manage or remove moisture as it is created and to ensure background ventilation moisture control.
7. Testing strategy of total duct leakage in accordance with Section N1103.3.3 to limit moisture migration into building cavities through duct leakage.

Commenter's Reason: The committee's concern about a new concept is unfounded. The concept brings together the many current requirements of the code that manage moisture in a house into one place that can be easily reviewed by a jurisdiction's plans examiner. The list is only seven items long and may seem extensive only because the code already understands the importance of the seven items. What this proposal is really doing is pointing out the importance of the integration of the seven items so that moisture does no degrade the durability and efficiency of the building or the health of the occupants. In a similar way that HVAC design reports are required to be turned in to demonstrate that the interaction of heating and cooling equipment, the duct system, and the thermal envelope are performing this "Vapor Management Declaration" gives the plan examiner one place to look to ensure that vapor management is occurring per the code.

To successfully comply with this code requirement a declaration answering the seven questions shall be documented on the construction documents. I disagree with the committee's statement that this is not clear.

Lastly, the committee was concerned about the cost statement. I stated and continue to believe that cost will go up and then back down. The Builder and design team only needs to document the integration of the code required vapor management requirements once. As long as the builder's strategy does not change the documentation on the construction documents does not need to change. This is similar to the air sealing details that are required to be incorporated on the plan set. Once these details are defined the architect can simply cut and past the detail onto the drawing. The real benefit of the requirement it consistency and thought about how to integrate the systems, as well as, informing the construction staff and jurisdiction of how the house will be constructed to manage moisture.

RB271-16 Part I

RB271-16 Part II
R403.6.2 (New) [IRCN1103.6.2 (New)]

Proposed Change as Submitted

Proponent : Robert Schwarz, representing EnergyLogic, Inc. (robby@nrglogic.com)

2015 International Energy Conservation Code

R403.6.2 (N1103.6.2) Testing of ventilation systems. Whole house, local and spot ventilation systems shall be tested to verify that the minimum required ventilation flow rates in accordance with the International Residential Code or International Mechanical Code, as applicable, are being produced by the systems. A flow rate report shall be provided to the code official prior to certificate of occupancy.

Reason: As we continue to build tight homes as required by the IECC to achieve our energy efficiency goals spot/local and whole house ventilation becomes and even more crucial aspect of ensuring that the full intent of the IECC is met. This includes durability, safety, flexibility as well as efficiency. If we do not more actively ensure that the systems in our homes are not only there but are also performing as intended we have missed the mark with regards to the intent of the code. The testing experience gained through the implementation of the EnergyStar program has clearly demonstrated that ventilation fans are installed but are not performing as required by the code. Simple cost effective testing is available to ensure that the systems in our home are not only there but that they work.

Bibliography: BSD-106: Understanding Vapor Barriers
Joseph Lstiburek
http://buildingscience.com/documents/digests/bsd-106-understanding-vapor-barriers
You don't need a Vapor Barrier
Energy Vanguard
Allison Bailes
http://www.energyvanguard.com/blog-building-science-HERS-BPI/bid/54110/You-Don-t-Need-a-Vapor-Barrier-Probably

Cost Impact: Will increase the cost of construction
The cost implications of this code change are small. Qualified testing personnel are already available and at the building performing blower door and duct leakage tests. Adding simple flow measurements of ventilation systems at the same time a blower door test occurs, for example, is not only practical but cost effective. An increase is cost of $25-$50 is well worth the reduction in builder risk issues that are associated with poor implementation of code required moisture and pollutant management.

RB271-16 Part II : R403.6.2 (N1103.6.2)-SCHWARZ13824

Public Hearing Results

Part II

Committee Action: **Disapproved**

Committee Reason: A simple smoke test is all the code official needs to do. He inspects the rough-in and the equipment rating. These smaller systems are prone to failure anyhow. It's just not that critical at this time to need to be accurately verifying flow rates.

Assembly Action: **None**

Individual Consideration Agenda

Proponent : Robert Schwarz, representing EnergyLogic, Inc. (robby@nrglogic.com) requests Approve as Submitted.

Commenter's Reason: The committee felt that code officials or approved third parties only need to perform a simple smoke test on ventilation system to demonstrate that they work. The issue here is the difference between working and performing to the requirement of the code. The code is requiring tighter homes and moisture and pollutant control is more and more important to ensure from an energy, durability, and health perspective. Smoke testing, by the way which is not being done, does not lead to any quantification of the actual flow rate of a fan. Nor does the fan rated flow rate documentation. Flow is determined not only based off the rated flow, but also by how the fan housing and motor are integrated with the duct and

termination to the outdoors. These three things determine the actual flow rate of the fan and can only be determined if tested. Using a flow box to test to flow is simple, quick, and accurate.

The committee felt that these systems are prone to failure. The reality is that the Energy Star Program has demonstrated that typical builder grade fans may fail but it will be quickly observed that typical builder grade fans that are rated to push 50 CFM of air are not adequate to meet the requirements of code. Higher quality fans will be needed and some addition cost will be needed to be absorbed. Testing fees will be small for builders that are already using the services of Energy Raters as they are already on site. If they are not, then the fees may be higher. The incremental cost increase for a better quality 50-80 CFM bath fan is between $50-$100.

Building scientist always harp on the mantra "Built Tight and Ventilate Right". The code is forcing Builders to build tight and we are ensuring that they are through testing. It is time to ventilate right and ensure that we are through testing. If we do not, energy, health, and durability issue in our houses will continue for years and years to come.

RB271-16 Part II

RB272-16
IRC: R702.7.1.

Proposed Change as Submitted

Proponent : Craig Conner, representing self (craig.conner@mac.com)

2015 International Residential Code

TABLE R702.7.1
CLASS III VAPOR RETARDERS

CLIMATE ZONE	CLASS III VAPOR RETARDERS PERMITTED FOR:[a]
~~Marine~~ 4	Vented cladding over wood structural panels.
	Vented cladding over fiberboard.
	Vented cladding over gypsum.
	Continuous insulation with *R*-value ≥ 2.5 over 2 × 4 wall.
	Continuous insulation with *R*-value ≥ 3.75 over 2 × 6 wall.
5	Vented cladding over wood structural panels.
	Vented cladding over fiberboard.
	Vented cladding over gypsum.
	Continuous insulation with *R*-value ≥ 5 over 2 × 4 wall.
	Continuous insulation with *R*-value ≥ 7.5 over 2 × 6 wall.
6	Vented cladding over fiberboard.
	Vented cladding over gypsum.
	Continuous insulation with *R*-value ≥ 7.5 over 2 × 4 wall.
	Continuous insulation with *R*-value ≥ 11.25 over 2 × 6 wall.
7 ~~and 8~~	Continuous insulation with *R*-value ≥ 10 over 2 × 4 wall.
	Continuous insulation with *R*-value ≥ 15 over 2 × 6 wall.

For SI: 1 pound per cubic foot = 16 kg/m^3 .
a. Spray foam with a maximum permeance of 1.5 perms at the installed thickness, applied to the interior cavity side of wood structural panels, fiberboard, insulating sheathing or gypsum is deemed to meet the continuous insulation requirement where the spray foam *R*-value meets or exceeds the specified continuous insulation *R*-value.

Reason: This corrects two errors made when this table was first adopted over a decade ago. Climate Zone 8 was originally omitted and then added at the last minute to the requirements of Climate Zone 7. There was no technical justification for this. Most of Climate Zone 4 was left out of the table for political reasons. I wrote the original language and did the research for the original vapor barrier code changes. There was no technical justification for leaving the largest part of Climate Zone 4 out of the table but I elected to leave it out in order to get the original code change passed. I have been meaning to fix these two errors for many years. Note that the thermal resistance values proposed for Climate Zone 8 are based on field measurements not computer simulations.

Cost Impact: Will not increase the cost of construction
These are options. In Climate Zone 4, which has the most construction, costs for the option would go down as the option is expanded into the whole of Climate Zone 4. In Climate Zone 8 cost might go up; however there is not much construction in the colder part of Alaska.

RB272-16 :
TABLE R702.7.1-
CONNER12897

Public Hearing Results

Committee Action: **Disapproved**

Committee Reason: The proposal deletes any requirements for climate zone 8 and without the modification that was ruled out of order there is no guidance for climate zone 8. The committee recommends the proponent bring this back with a public comment to add in climate zone 8.

Assembly Action: **None**

Individual Consideration Agenda

Public Comment 1:

Proponent : Jay Crandell, P.E., ARES Consulting, representing Foam Sheathing Committee of the American Chemistry Council (jcrandell@aresconsulting.biz) requests Approve as Modified by this Public Comment.

Modify as Follows:

2015 International Residential Code

TABLE R702.7.1
CLASS III VAPOR RETARDERS

CLIMATE ZONE	CLASS III VAPOR RETARDERS PERMITTED FOR:[a]
4	Vented cladding over wood structural panels.
	Vented cladding over fiberboard.
	Vented cladding over gypsum.
	Continuous insulation with *R*-value ≥ 2.5 over 2 × 4 wall.
	Continuous insulation with *R*-value ≥ 3.75 over 2 × 6 wall.
5	Vented cladding over wood structural panels.
	Vented cladding over fiberboard.
	Vented cladding over gypsum.
	Continuous insulation with *R*-value ≥ 5 over 2 × 4 wall.
	Continuous insulation with *R*-value ≥ 7.5 over 2 × 6 wall.
6	Vented cladding over fiberboard.
	Vented cladding over gypsum.
	Continuous insulation with *R*-value ≥ 7.5 over 2 × 4 wall.
	Continuous insulation with *R*-value ≥ 11.25 over 2 × 6 wall.
7	Continuous insulation with *R*-value ≥ 10 over 2 × 4 wall.
	Continuous insulation with *R*-value ≥ 15 over 2 × 6 wall.
8	Continuous insulation with *R*-value ≥ 15 over 2 × 4 wall.
	Continuous insulation with *R*-value ≥ 20 over 2 × 6 wall.

For SI: 1 pound per cubic foot = 16 kg/m^3 .
a. Spray foam with a maximum permeance of 1.5 perms at the installed thickness, applied to the interior cavity side of wood structural panels, fiberboard, insulating sheathing or gypsum is deemed to meet the continuous insulation requirement where the spray foam *R*-value meets or exceeds the specified continuous insulation *R*-value.

Commenter's Reason: This proposal is offered as a compromise between original proposals RB272 and RB273. It extracts the more important features of both proposals and combines them into a single proposal. From RB273 and RB272, Climate Zone 4 replaces the limited application to Marine 4 based on assessment of research (including various field studies of actual homes) described in the reason statement for proposal RB273. These requirements are needed in all of climate zone 4 (particularly 4A), not just Marine 4. Also based on RB272 and RB273, the existing provisions for Climate Zones 7 and 8 are limited to only Climate Zone 7 (without changing the requirements for Climate Zone 7 as was proposed in RB273). A new separate requirement is provided to address Climate Zone 8 with appropriate insulation R-values based on a compromise between a proposed (unaccepted) modification to RB272 and those proposed in RB273. This table needs to be updated and it is hoped that this PC provides a unifying solution for RB272 and RB273. An un-needed footnote for SI conversion is also deleted (the units do not exist in the table).

Public Comment 2:

Proponent : Joseph Lstiburek (joe@buildingscience.com) requests Approve as Modified by this Public Comment.

Modify as Follows:

2015 International Residential Code

TABLE R702.7.1
CLASS III VAPOR RETARDERS

CLIMATE ZONE	CLASS III VAPOR RETARDERS PERMITTED FOR:[a]
	Vented cladding over wood structural panels.
	Vented cladding over fiberboard.

4	Vented cladding over gypsum.
	Continuous insulation with *R*-value ≥ 2.5 over 2 × 4 wall.
	Continuous insulation with *R*-value ≥ 3.75 over 2 × 6 wall.
5	Vented cladding over wood structural panels.
	Vented cladding over fiberboard.
	Vented cladding over gypsum.
	Continuous insulation with *R*-value ≥ 5 over 2 × 4 wall.
	Continuous insulation with *R*-value ≥ 7.5 over 2 × 6 wall.
6	Vented cladding over fiberboard.
	Vented cladding over gypsum.
	Continuous insulation with *R*-value ≥ 7.5 over 2 × 4 wall.
	Continuous insulation with *R*-value ≥ 11.25 over 2 × 6 wall.
7	Continuous insulation with *R*-value ≥ 10 over 2 × 4 wall.
	Continuous insulation with *R*-value ≥ 15 over 2 × 6 wall.
8	Continuous insulation with *R*-value ≥ 12.5 over 2 × 4 wall.
	Continuous insulation with *R*-value ≥ 20 over 2 × 6 wall.

For SI: 1 pound per cubic foot = 16 kg/m^3 .
a. Spray foam with a maximum permeance of 1.5 perms at the installed thickness, applied to the interior cavity side of wood structural panels, fiberboard, insulating sheathing or gypsum is deemed to meet the continuous insulation requirement where the spray foam *R*-value meets or exceeds the specified continuous insulation *R*-value.

Commenter's Reason: As requrested by the committee, this restores zone 8.

Public Comment 3:

Proponent : Joseph Lstiburek (joe@buildingscience.com) requests Approve as Modified by this Public Comment.

Modify as Follows:

2015 International Residential Code

TABLE R702.7.1
CLASS III VAPOR RETARDERS

CLIMATE ZONE	CLASS III VAPOR RETARDERS PERMITTED FOR:[a]
4	Vented cladding over wood structural panels.
	Vented cladding over fiberboard.
	Vented cladding over gypsum.
	Continuous insulation with *R*-value ≥ 2.5 over 2 × 4 wall.
	Continuous insulation with *R*-value ≥ 3.75 over 2 × 6 wall.
5	Vented cladding over wood structural panels.
	Vented cladding over fiberboard.
	Vented cladding over gypsum.
	Continuous insulation with *R*-value ≥ 5 over 2 × 4 wall.
	Continuous insulation with *R*-value ≥ 7.5 over 2 × 6 wall.
6	Vented cladding over fiberboard.
	Vented cladding over gypsum.
	Continuous insulation with *R*-value ≥ 7.5 over 2 × 4 wall.
	Continuous insulation with *R*-value ≥ 11.25 over 2 × 6 wall.
7 and 8	Continuous insulation with *R*-value ≥ 10 over 2 × 4 wall.

7 and 8	Continuous insulation with *R*-value ≥ 15 over 2 × 6 wall.

For SI: 1 pound per cubic foot = 16 kg/m^3 .

a. Spray foam with a maximum permeance of 1.5 perms at the installed thickness, applied to the interior cavity side of wood structural panels, fiberboard, insulating sheathing or gypsum is deemed to meet the continuous insulation requirement where the spray foam *R*-value meets or exceeds the specified continuous insulation *R*-value.

Commenter's Reason: All of Climate zone 4 should have been included in the original code change over a decade ago based on the field research and experience. However, it was left out as a compromise in order to have the overall change accepted. In the past decade interior moisture loads have risen in climate zone 4 enclosures due to significantly higher levels of air tightness making it necessary to add this requirement to include all of climate zone 4 not just marine climate 4.

RB272-16

RB273-16
IRC: R702.7.1.

Proposed Change as Submitted

Proponent : Jay Crandell, P.E., ARES Consulting, representing Foam Sheathing Committee of the American Chemistry Council

2015 International Residential Code

TABLE R702.7.1
CLASS III VAPOR RETARDERS

CLIMATE ZONE	CLASS III VAPOR RETARDERS PERMITTED FOR:[a]
4 & Marine 4	Vented cladding over wood structural panels.
	Vented cladding over fiberboard.
	Vented cladding over gypsum.
	Continuous insulation with *R*-value ≥ 2.5 over 2 × 4 wall.
	Continuous insulation with *R*-value ≥ 3.75 over 2 × 6 wall.
5	Vented cladding over wood structural panels.
	Vented cladding over fiberboard.
	Vented cladding over gypsum.
	Continuous insulation with *R*-value ≥ 5 over 2 × 4 wall.
	Continuous insulation with *R*-value ≥ 7.5 over 2 × 6 wall.
6	Vented cladding over fiberboard.
	Vented cladding over gypsum.
	Continuous insulation with *R*-value ≥ 7.5 over 2 × 4 wall.
	Continuous insulation with *R*-value ≥ 11.25 over 2 × 6 wall.
7 ~~and 8~~	Continuous insulation with *R*-value ≥ 12~~10~~ over 2 × 4 wall.
	Continuous insulation with *R*-value ≥ 18~~15~~ over 2 × 6 wall.
8[c]	Continuous insulation with R-value ≥ 17 over 2x4 wall Continuous insulation with R-value ≥ 25 over 2x6 wall

For SI: 1 pound per cubic foot = 16 kg/m ^{3} .

a. ~~Spray~~ In addition to the vapor retarder, spray foam with a maximum permeance of 1.5 perms at the installed thickness, applied to the interior cavity side of wood structural panels, fiberboard, insulating sheathing or gypsum is deemed to meet the continuous insulation requirement where the spray foam *R* -value plus any continuous insulation R-value provided meets or exceeds the specified continuous insulation *R* -value.
b. Continuous insulation R-values shall be permitted to be determined using the following minimum ratios of exterior continuous insulation R-value to cavity insulation R-value by Climate Zone: 0.2 (Climate Zone 4 and Marine 4), 0.35 (Climate Zone 5), 0.5 (Climate Zone 6), 0.8 (Climate Zone 7), and 1.1 (Climate Zone 8). Interpolation of insulation ratios shall be permitted based on the heating degree days of a given site and the maximum heating degree day limits defining the boundaries of each Climate Zone in accordance with Table N1101.7.2(2).
c. The continuous insulation requirement for Climate Zone 8 is based on a maximum 16,200 heating degree days (65F basis) [9,000 heating degree days (18C basis)]. Where this heating degree day limit is exceeded, an approved design to determine the amount of continuous insulation shall be required.

Reason: An extensive review and analysis of available data on actual performance of assemblies has been conducted to evaluate Canadian and US experience and practices related to water vapor control for modern insulated light-frame wall assemblies (ABTG, 2015). The findings from this study have re-affirmed most of the provisions in Table R702.7.1 and identified the need for a few refinements as described below.

First, when Table R702.7.1 was first introduced to the IRC, only Climate Zone 4 Marine and not all of Climate Zone 4 was addressed. Subsequent experience, field data, testing and analysis has demonstrated that these requirements should apply to Climate Zone 4 more broadly, not just Climate Zone 4 Marine. The study also has found that the continuous insulation requirements in Climate Zone 7 would benefit from a modest increase to better align with the extreme northern boundary of Climate Zone 7. For most of Climate Zone 7 there is no change when footnote 'b' is applied.

In addition, Climate Zone 8 was inadvertently included with Climate Zone 7 as an artifact or unintended action in the code development process when these provisions were first introduced in the IRC (the provisions were intended for Climate Zone 7 only). The revised values for Climate Zone 8 are based on an analysis consistent with that used as a basis for the remainder

of the existing table and informed by findings mentioned above (ABTG, 2015). In addition, a limit on heating degree days (footnote 'c') is placed on the extent of Climate Zone 8 for the purpose of the table because of the large range of severe cold climate conditions in Climate Zone 8. This was necessary to develop an appropriate prescriptive solution.

Furthermore, the continuous insulation R-values in Table R702.7.1 have always been based on the concept of insulation ratios and this is now disclosed in footnote 'b' to allow alternative (more efficient) solutions for determining continuous insulation amounts depending on the cavity insulation amount and the site's heating degree day condition. Similarly, the current and proposed continuous insulation R-values are based on worst-case (maximal) assumptions for the R-value of vapor-permeable cavity insulation (e.g., R-15 for 2x4 and R-22.5 for 2x6) and use of footnote 'b' would result in a more efficient design where less cavity insulation is used (e.g., R-13 instead of R-15).

Finally, footnote 'a' is clarified in regard to the need for a Class III interior vapor retarder when closed-cell spray foam is used at the minimum amounts required by Table R702.7.1. In addition, it is clarified that the R-value requirement can be met by spray foam alone (in the cavity only) or by combination of spray foam in the cavity and continuous insulation on the exterior. This will provide more options to satisfy the requirements of the table.

Bibliography: ABTG (2015). Assessment of Water Vapor Control Methods for Modern Insulated Light-Frame Wall Assemblies, Research Report No. ABTG-1410-03, Applied Building Technology Group, LLC, www.appliedbuildingtech.com/rr/1410-03

Cost Impact: Will not increase the cost of construction
This proposal will increase cost in the northern portions of Climate Zones 7 and in Climate Zone 8 only when a Class III vapor retarder is used, but other vapor retarder options (e.g., Class I or Class II) are unchanged and are commonly used. Thus, there is no cost impact to construction.

RB273-16 :
TABLE R702.7.1-
CRANDELL12676

Public Hearing Results

Committee Action: **Disapproved**

Committee Reason: There should be separate R values for the extreme boundaries of climate zone 7 in Alaska vs the more moderate portion for North Dakota, Minnesota, Wisconsin and Michigan.

Assembly Action: **None**

Individual Consideration Agenda

Proponent : Jay Crandell, P.E., ARES Consulting, representing Foam Sheathing Committee of the American Chemistry Council (jcrandell@aresconsulting.biz) requests Approve as Submitted.

Commenter's Reason: The RB273 proposal missed the opportunity for testimony from the hearing floor due to confusion at the hearing as to hearing order. As a result, there was no opportunity to discuss or respond to the committee's reasons for disapproval. The reason stated was that there should be different solutions for different locations within Climate Zone 7. The proposal includes a table footnote 'b' that permits interpolation within a climate zone such that this can be done. The current code does not allow it; thus, the RB273 proposal is the only means to actually resolve the committee's comment (which is a concern with the existing code, not the proposal). The proposal addresses important refinements to the Class III vapor retarder provisions including correction of a non-conservative misapplication of Climate Zone 8 in the existing code. Refer to the original proposal's reason statement for additional information and support for this public comment.

RB273-16

RB277-16
IRC: R702.7.4 (New).

Proposed Change as Submitted

Proponent : Jay Crandell, P.E., ARES Consulting, representing Foam Sheathing Committee of the American Chemistry Council

2015 International Residential Code

Add new text as follows:

R702.7.4 Wet-applied cavity insulation. Prior to vapor retarder application, drying of wet-applied cavity insulation materials shall comply with the insulation manufacturer's installation instructions.

Reason: The vapor retarder provisions of the IRC and many of the materials used in wall construction (e.g., drywall, exterior sheathing, etc.) are not intended to handle wall assemblies that are enclosed with high levels of construction moisture, such as may be caused by wet-applied insulation materials. This proposal provides guidance to code user's and a means of enforcement to avoid this problem by referencing the insulation manufacturer's installation instructions.
Problems associated with high construction moisture from overly-wet insulation materials at the time of wall enclosure (i.e., installation of the vapor retarder) include mold, wood shrinkage and swelling, material degradation due to extended exposure to high levels of moisture and vapor drives, drywall cracks and nail pops, and other serviceability or building health problems. Wet-applied insulation manufacturers typically specify maximum moisture levels or minimum drying times for their materials prior to enclosure.

CIMA Technical Bulletin #3: Standard Practice for the Installation of Sprayed Cellulosic Wall Cavity Insulation (SCWCI), Section 8.4 states: "Installation of the interior finish should not be permitted until the insulation has dried...The manufacturer's recommended drying times shall be followed."

In addition, ASTM E 1677 also recommends that "When vapor retarders are used on both sides of the opaque wall, precautions should be used to ensure that building materials within the wall cavity have a moisture content below 19%." This statement is based on Lstiburek and Carmody, "Moisture Control Handbook" published by Oak Ridge National Laboratory. More recent research has shown that, even with a vapor retarder only on one side of an assembly, enclosing walls too soon after application of wet-applied insulation materials will substantially delay drying and cause the moisture to accumulate to excessive levels in materials toward the inside or outside of the construction. Simply put, there are few cases or conditions where high initial moisture levels could be tolerated without significant consequences.

Cost Impact: Will not increase the cost of construction
The proposal clarifies requirements that are currently intended to be practiced, but are not specified in the code.

RB277-16 :
R702.7.4 (NEW)-
CRANDELL12671

Public Hearing Results

Committee Action: **Disapproved**

Committee Reason: This is a need for code text to address the issue of the wet cavity before it is closed up. However, the issues of types of vapor retarders and the specific language need to be cleaned up and should be done through a public comment. Additionally the manufacturers installation instruction can be rather vague and more clarification is needed.

Assembly Action: **None**

Individual Consideration Agenda

Public Comment 1:

Proponent : Jay Crandell, P.E., ARES Consulting, representing Foam Sheathing Committee of the American Chemistry Council (jcrandell@aresconsulting.biz) requests Approve as Modified by this Public Comment.

Modify as Follows:

2015 International Residential Code

R702.7.4 Wet-applied cavity insulation. ~~Prior to vapor retarder application, drying of wet-applied~~

Wet-applied cavity insulation materials shall ~~comply~~ be installed in accordance with the ~~insulation~~ manufacturer's installation instructions and, before enclosure, shall meet the specified maximum moisture content or minimum drying time.

Commenter's Reason: The residential building committee recognized RB277 as addressing "a need for the code text to address the issue of wet cavity insulation". The committee also suggested some further improvements which are addressed in this "cleaned up" PC. The reference to vapor retarder has been removed to avoid confusion in regard to coordination with vapor retarder types. The issue is enclosure of the wall assembly, regardless of the type of vapor retarder used. The specific requirements needed to be included in and used from the manufacturer's installation instructions are also clearly specified as requested by the committee.

RB277-16

RB278-16
IRC: R703.1.1.

Proposed Change as Submitted

Proponent : Laverne Dalgleish, Building Professionals, representing Building Professionals (ldalgleish@buildingprofessionals.com)

2015 International Residential Code

R703.1.1 Water resistance. The exterior wall envelope shall be designed and constructed in a manner that prevents the accumulation of water within the wall assembly by providing a water-resistant barrier behind the exterior veneer as required by Section R703.2 and a means of draining to the exterior water that enters the assembly.
Where IRC Table N 1101.7 (R301.1) designates the city as either A - Moist or C - Marine, the means for preventing the accumulation of water with the wall assembly shall be provided by;
a. A drained and vented air space not less than 3/16 inch deep behind the exterior veneer, over the full heigth and width of the wall, or
b. an open drainage material complying with ASTM E2925, is installed behind the exterior veneer, over the full height and width of the wall.
Protection against condensation in the exterior wall assembly shall be provided in accordance with Section R702.7 of this code.

Exceptions:

1. A weather-resistant exterior wall envelope shall not be required over concrete or masonry walls designed in accordance with Chapter 6 and flashed in accordance with Section R703.4 or R703.8.
2. Compliance with the requirements for a means of drainage, and the requirements of Sections R703.2 and R703.4, shall not be required for an exterior wall envelope that has been demonstrated to resist wind-driven rain through testing of the exterior wall envelope, including joints, penetrations and intersections with dissimilar materials, in accordance with ASTM E 331 under the following conditions:
   - 2.1. Exterior wall envelope test assemblies shall include at least one opening, one control joint, one wall/eave interface and one wall sill. All tested openings and penetrations shall be representative of the intended end-use configuration.
   - 2.2. Exterior wall envelope test assemblies shall be at least 4 feet by 8 feet (1219 mm by 2438 mm) in size.
   - 2.3. Exterior wall assemblies shall be tested at a minimum differential pressure of 6.24 pounds per square foot (299 Pa).
   - 2.4. Exterior wall envelope assemblies shall be subjected to the minimum test exposure for a minimum of 2 hours.The exterior wall envelope design shall be considered to resist wind-driven rain where the results of testing indicate that water did not penetrate control joints in the exterior wall envelope, joints at the perimeter of openings penetration or intersections of terminations with dissimilar materials.

Reference standards type: This reference standard is new to the ICC Code Books
Add new standard(s) as follows:
ASTM E2925 - 14 Standard Specification for Manufactured Polymeric Draining and Ventilation Materials used to Provide a Rainscreen Function

Reason: This proposal adds additional options to meeting the existing requirments of the code.

Cost Impact: Will not increase the cost of construction
As this adds additional options to meeting the existing requirments of the code, there is not a cost increase

Analysis: A review of the standard(s) proposed for inclusion in the code,ASTM E 2925-14, with regard to the ICC criteria for referenced standards (Section 3.6 of CP#28) will be posted on the ICC website on or before April 1, 2016.

RB278-16 :
R703.1.1-
DALGLEISH13224

Public Hearing Results

Committee Action: **Disapproved**

Committee Reason: The committee felt there were to many concerns raised with the new reference standard ASTM E2925-14. The cost impact is not substantiated it appears there would be a cost increase.

Assembly Action: **None**

Public Comment 1:

Proponent : Laverne Dalgleish, Building Professionals, representing Building Professionals (ldalgleish@buildingprofessionals.com) requests Approve as Modified by this Public Comment.

Modify as Follows:

2015 International Residential Code

R703.1.1 Water resistance. The exterior wall envelope shall be designed and constructed in a manner that prevents the accumulation of water within the wall assembly by providing a water-resistant barrier behind the exterior veneer as required by Section R703.2 and a means of draining to the exterior water that enters the assembly.
Where IRC Table N 1101.7 (R301.1) designates the city as either A - Moist or C - Marine, the means for preventing the accumulation of water with the wall assembly shall be provided by;
~~a~~ 1. A drained and vented air space not less than 3/16 inch deep behind the exterior veneer, over the full heigth and width of the wall, or
~~b~~ 2. an open drainage material complying with ASTM E2925, is installed behind the exterior veneer, over the full height and width of the wall.
Protection against condensation in the exterior wall assembly shall be provided in accordance with Section R702.7 of this code.

Exceptions:

1. A weather-resistant exterior wall envelope shall not be required over concrete or masonry walls designed in accordance with Chapter 6 and flashed in accordance with Section R703.4 or R703.8.
2. Compliance with the requirements for a means of drainage, and the requirements of Sections R703.2 and R703.4, shall not be required for an exterior wall envelope that has been demonstrated to resist wind-driven rain through testing of the exterior wall envelope, including joints, penetrations and intersections with dissimilar materials, in accordance with ASTM E 331 under the following conditions:
   - 2.1. Exterior wall envelope test assemblies shall include at least one opening, one control joint, one wall/eave interface and one wall sill. All tested openings and penetrations shall be representative of the intended end-use configuration.
   - 2.2. Exterior wall envelope test assemblies shall be at least 4 feet by 8 feet (1219 mm by 2438 mm) in size.
   - 2.3. Exterior wall assemblies shall be tested at a minimum differential pressure of 6.24 pounds per square foot (299 Pa).
   - 2.4. Exterior wall envelope assemblies shall be subjected to the minimum test exposure for a minimum of 2 hours. The exterior wall envelope design shall be considered to resist wind-driven rain where the results of testing indicate that water did not penetrate control joints in the exterior wall envelope, joints at the perimeter of openings penetration or intersections of terminations with dissimilar ~~materials.~~ material

Reference standards type: This reference standard is new to the ICC Code Books
Add new standard(s) as follows:

Commenter's Reason: The concern raised at the Group B Hearings was that the standard referenced (ASTM E2925) listed specific requirements for both the substrate and the water resistive barrier in the construction of the test specimen. This standard is currently being modified to make the requirements generic both for the substrate and for the water resistive barrier. The ASTM E2925 standard originally stated;

"A1.2.1 Construct one 1200 mm by 2400 mm test wall assembly comprised of 50 mm by 100 mm (nominal) perimeter framing and 50 mm by 100 mm (nominal) framing vertically at 400 mm on center. Install a wood panel of 11 mm oriented strand board (OSB) to the framing and fasten with 10d fasteners at 200 mm on center. Install a water resistive barrier (WRB) complying with Specification E2556/E2556M on the OSB in a seamless, continuous manner."

This section will now state;

"A.1.2.1 The test specimen shall be 1200 mm by 2400 mm constructed from 50 mm by 100 mm (nominal) framing for the perimeter framing with two vertically studs every 400 mm on center across the 1200 mm leg, have a typical substrate used in building construction installed on one side of the wood framing which is then covered with a water resistive barrier (WRB) that it is seamless and continuous."

With the modified requirements in the standard, any substrate and any water resistive barrier is acceptable to be used in constructing the specimen.

There will be a cost to creating an airspace of $0.25 per square foot to add furring strips made from plywood before installing the cladding

Analysis: The proposed modification to this code change proposal includes update of the year edition of standard ASTM E2925 from -14 to -16. CP28, Section 3.6.3.1 and newly referenced standard "shall be completed and readily available prior to the Public Comment Hearing based on the cycle of code development which includes the code change proposal." Therefore, the proponent is required to provide information verifying that the standard ASTM E2925-16 is completed and readily available at the time of the public comment hearings.

RB278-16

RB281-16
IRC: , R202 (New), R703.1.1.1 (New).

Proposed Change as Submitted

Proponent : Matthew Dobson, Vinyl Siding Institute, representing Vinyl Siding Institute (mdobson@vinylsiding.org)

2015 International Residential Code

Add new definition as follows:

SECTION R202 DEFINITIONS

ABSORPTIVE CLADDING. Exterior wall covering that will absorb moisture.

SECTION R202 DEFINITIONS

VENTED CLADDING. Exterior wall covering that creates a cavity or space between the cladding and exterior wall assembly when installed.

Add new text as follows:

R703.1.1.1 Water/Moisture Management. In climate zones designated by Figure N1101.7(R301.1) as Moist (A) or Marine (C), cladding must be designed to drain exterior water that gets behind it in accordance with R703.1.1.1.1, R703.1.1.1.2, or R703.1.1.1.3.

R703.1.1.1.1 Vented Cladding. Meets the definition as a vented cladding.
R703.1.1.1.2 Absorptive Cladding. Absorptive cladding must have a minimum 1/8 inch (3 mm) space between the water-resistive barrier and the cladding.
R703.1.1.1.3 Absorptive Cladding. Absorptive cladding must demonstrate drainage efficiency of 75-percent per ASTM E2273.

Reference standards type: This reference standard is new to the ICC Code Books
Add new standard(s) as follows:

ASTM E2273-03(2011). Standard Test Method for Determining the Drainage Efficiency of Exterior Insulation and Finish Systems (EIFS) Clad Wall Assemblies

Reason: An increase in durability and resiliency in the codes is the next step to improving how homes will perform in the decades ahead. This change brings in concepts that have been recognized in the code, vented cladding, and in regionally modified codes and begins to better address moisture management from the outside. The Pacific Northwest (Oregon, Seattle) and the eastern parts of Canada have been addressing this issue for many years and it is time the IRC begins to recognize these types of construction and their benefits to building durability and resiliency.
This change defines different types of cladding: vented and absorptive. It then places requirements on absorptive cladding-cladding that will absorb moisture and retain it for a period of time-which will enable better water shedding and minimize chances for water accumulation, rot, mold build up and also potential for freeze-thaw issues.

This change is meant to start a conversation on this issue with a goal of developing a more comprehensive approach to moisture management.

Cost Impact: Will increase the cost of construction
Some materials will require rainscreening construction techniques and/or additional testing.

Analysis: A review of the standard(s) proposed for inclusion in the code,ASTM E 2273-03(2011), with regard to the ICC criteria for referenced standards (Section 3.6 of CP#28) will be posted on the ICC website on or before April 1, 2016.

RB281-16 :
R703.1.1.1 (NEW)-
DOBSON13108

Public Hearing Results

Committee Action: **Disapproved**

Committee Reason: As stated in the reason statement this proposal is a starting point for discussion and much more needs to be done. Also, the referenced test method is for EIFS and is being applied to other cladding. The cost statement does not provide any substantiation.

Assembly Action: **None**

Individual Consideration Agenda

Public Comment 1:

Proponent : Matthew Dobson, Vinyl Siding Institute, representing Vinyl Siding Institute (mdobson@vinylsiding.org) requests Approve as Modified by this Public Comment.

Modify as Follows:

2015 International Residential Code

SECTION R202 DEFINITIONS

ABSORPTIVE CLADDING. Exterior wall covering that will absorb moisture.

SECTION R202 DEFINITIONS

VENTED CLADDING. Exterior wall covering that creates a cavity or space between the cladding and exterior wall assembly when installed.

R703.1.1.1 Water/Moisture Management. In climate zones designated by Figure N1101.7(R301.1) as ~~Moist (A) or~~ Marine (C), cladding must be designed to drain exterior water that gets behind it in accordance with R703.1.1.1.1, R703.1.1.1.2, or R703.1.1.1.3.

R703.1.1.1.1 Vented Cladding. Meets the definition as a vented cladding.
R703.1.1.1.2 Absorptive Cladding. Absorptive cladding must have a minimum 1/8 inch (3 mm) space between the water-resistive barrier and the cladding.
R703.1.1.1.3 Absorptive Cladding. Absorptive cladding must demonstrate drainage efficiency of 75-percent per ASTM E2273.

Commenter's Reason: This modification creates requirements that are consistent with what is currently required in many parts of the Marine (C) climate zone.
The referenced ASTM, which does reference EIFS building systems, is used to test all types of cladding for drainage efficiency.

RB281-16

RB282-16

IRC: R703.1.2, R703.11.1.4, R703.3, R703.3.1, R703.3.1 (New), R703.3.1.1 (New), R703.3.2.

Proposed Change as Submitted

Proponent : T. Eric Stafford, PE, representing AECOM; Andrew Herseth, representing Federal Emergency Management Agency (andrew.herseth@fema.dhs.gov)

2015 International Residential Code

R703.1.2 Wind resistance. Wall coverings, roof overhang soffits, backing materials and their attachments shall be capable of resisting wind loads in accordance with Tables R301.2(2) and R301.2(3). Wind-pressure resistance of the siding , soffit, and backing materials shall be determined by ASTM E 330 or other applicable standard test methods. Where wind-pressure resistance is determined by design analysis, data from approved design standards and analysis conforming to generally accepted engineering practice shall be used to evaluate the siding , soffit, and backing material and its fastening. All applicable failure modes including bending rupture of siding, fastener withdrawal and fastener head pull-through shall be considered in the testing or design analysis. Where the wall covering , soffit, and the backing material resist wind load as an assembly, use of the design capacity of the assembly shall be permitted.

R703.3 ~~Nominal~~ Wall covering nominal thickness and attachments. The nominal thickness and attachment of exterior wall coverings shall be in accordance with Table R703.3(1), the wall covering material requirements of this section, and the wall covering manufacturer's installation instructions. Cladding attachment over foam sheathing shall comply with the additional requirements and limitations of Sections R703.15 through R703.17. Nominal material thicknesses in Table R703.3(1) are based on a maximum stud spacing of 16 inches (406 mm) on center. Where specified by the siding manufacturer's instructions and supported by a test report or other documentation, attachment to studs with greater spacing is permitted. Fasteners for exterior wall coverings attached to wood framing shall be in accordance with Section ~~R703.3.2~~ R703.3.3 and Table R703.3(1). Exterior wall coverings shall be attached to cold-formed steel light frame construction in accordance with the cladding manufacturer's installation instructions, the requirements of Table R703.3(1) using screw fasteners substituted for the nails specified in accordance with Table R703.3(2), or an approved design.

~~R703.3.1~~ R703.3.2 Wind limitations. Where the design wind pressure exceeds 30 psf or where the limits of Table ~~R703.3.1~~ R703.3.2 are exceeded, the attachment of wall coverings and roof overhang soffits shall be designed to resist the component and cladding loads specified in Table R301.2(2), adjusted for height and exposure in accordance with Table R301.2(3). For the determination of wall covering and roof overhang soffit attachment, component and cladding loads shall be determined using an effective wind area of 10 square feet (0.93 m^2).

TABLE ~~R703.3.1~~ R703.3.2

LIMITS FOR ATTACHMENT PER TABLE R703.3(1)

For SI: 1 foot = 304.8 mm, 1 mile per hour = 0.447 m/s.
NL = Not limited by Table R703.3.1, DR = Design required.

~~R703.3.2~~ R703.3.3 Fasteners. Exterior wall coverings and roof overhang soffits shall be securely fastened with aluminum, galvanized, stainless steel or rust-preventative coated nails or staples in accordance with Table R703.3(1) or with other approved corrosion-resistant fasteners in accordance with the wall covering manufacturer's installation instructions. Nails and staples shall comply with ASTM F 1667. Nails shall be T-head, modified round head, or round head with smooth or deformed shanks. Staples shall have a minimum crown width of $^{7}/_{16}$ inch (11.1 mm) outside diameter and be manufactured of minimum 16-gage wire. Where fiberboard, gypsum, or foam plastic sheathing backing is used, nails or staples shall be driven into the studs. Where wood or wood structural panel sheathing is used, fasteners shall be driven into studs unless otherwise permitted to be driven into sheathing in accordance with either the siding manufacturer's installation instructions or Table R703.3.2.

R703.3.1 Roof overhang soffit nominal thickness and attachment. The minimum nominal thickness for wood structural panel roof overhang soffits shall be in accordance with Table R703.3(1). Fasteners for wood structural panel roof overhang soffits shall be in accordance with Section R703.3.3 and Table R703.3(1). Manufactured soffit panels shall be installed in accordance with the manufacturer's installation instruction for the design wind loads required in Section R703.1.2.

Reason: Little guidance is given in the code for soffit installation and design loads on soffits. The 2004 hurricane season resulted in significant damage to soffit panels in the State of Florida and resultant wind and water damage to many buildings. Further research revealed inconsistencies in the way loads were being calculated for roof overhang soffits. At the time, neither the codes nor ASCE 7 provided any guidance on the appropriate loads for the design of soffit panels. As a result, the 2007 Florida Building Code was revised to include new language specifically requiring soffits to be designed using the wall GCp coefficients based on an effective wind area of 10 square feet. Additionally, ASCE 7-10 addressed the issue by stating that the external pressure coefficient on underside of the roof overhang is the same as the adjacent wall surface adjusted for effective wind area. This language in ASCE 7-10 is somewhat ambiguous and is not readily identifiable. It is located in the definition of GCp in Section 30.10 for roof overhangs.

While design loads for soffits are addressed in the 2014 Edition of ICC 600, they are not addressed in some of the other prescriptive documents referenced by the IRC. This language simply seeks to clarify the design loads that are to be used on soffits.

The Hurricane Charley Mitigation Team Assessment (MAT) report (FEMA 488) identified widespread damage to vinyl and aluminum soffit panels, particularly on residential buildings. See Sections 8.2.2, 8.5, and 8.7.1 in FEMA 488. These panels were either pulled out by negative wind pressures (suction) or pushed up by positive pressures (Figure 3-21 from the Hurricane Charley MAT and Figure 1 from FEMA 499 Technical Fact Sheet No. 7.5). The damage was often not limited to the loss of the exterior soffit cladding system. Damages to these building envelope components led to wind-driven rain entering the homes and wetting the building interior and the internal wall cavities, and saturating attic insulation and ceilings that sometimes collapsed (Figure 3-22 from the Hurricane Charley MAT).

Additionally, the IRC doesn't specifically address soffit installation for low wind regions (areas where wind design is not required in accordance with Figure R301.2(4)B). Most of the nominal thicknesses and fastening requirements in Table R703.3(1) would not apply to soffit panels, with the exception of wood structural panel. Since the design wind pressures on the soffit are the same as the adjacent wall surface, the requirements for wood structural panel wall coverings would be acceptable for wood structural panel soffit panels. New Section R703.3.1 has been added requiring wood structural panel soffits to comply with Table R703.3.1 and Section R703.3.3 (formerly R703.3.2). Manufactured soffit panels have general installation instructions, but also include installation instructions for specific wind loads. The new language refers to the installation instructions for manufactured soffit panels but also emphasizes that the soffit panel has to be capable of resisting the design loads in Table R301.2(2) even in lower wind regions.

It's important to note that this code change does not add additional wind loading requirements for manufactured soffits. The materials and fastening requirements in Table R703.3(1) were prescriptively developed to resist a design wind pressure of 30 psf. This code change simply requires manufactured soffit panels to be installed to resist the minimum design wind pressure applicable.

Figure 1. Missing soffit material.

Figure 3-21.
Typical elevated wood-frame house with extensive soffit damage (North Captiva Island)

Figure 3-22.
The drywall ceiling in the home shown in Figure 3-21 collapsed after becoming waterlogged and weakened by wind-driven rain that entered through the exterior soffit space. Plywood covers the opening of a window broken by windborne debris after the plastic shutters blew off (North Captiva Island).

Bibliography: FEMA 488, Mitigation Assessment Team Report: Hurricane Charley in Florida (2005)
Homebuilders Guide to Coastal Construction Technical Fact Sheet Series - FEMA P-499

Cost Impact: Will increase the cost of construction
May result in an increase in the cost of construction for lower wind regions as the IRC doesn't specifically address soffit installation or attachment. However, any initial minimal up front construction costs will result in reduced owner residual risk through improved resilience to high wind loading, reduced wind driven rain associated damages and more than offset costs through mitigating already well documented failure modes and vulnerabilities.

RB282-16 :
R703.1.2-
STAFFORD11897

Public Hearing Results

Committee Action: **Approved as Modified**

Modification:

R703.1.2 Wind resistance. Wall coverings, ~~roof overhang soffits,~~ _ backing materials and their attachments shall be capable of resisting wind loads in accordance with Tables R301.2(2) and R301.2(3). Wind-pressure resistance of the siding~~, soffit,~~ and backing materials shall be determined by ASTM E 330 or other applicable standard test methods. Where wind-pressure resistance is determined by design analysis, data from approved design standards and analysis conforming to generally accepted engineering practice shall be used to evaluate the siding~~, soffit,~~ and backing material and its fastening. All applicable failure modes including

bending rupture of siding, fastener withdrawal and fastener head pull-through shall be considered in the testing or design analysis. Where the wall covering~~, soffit,~~ and the backing material resist wind load as an assembly, use of the design capacity of the assembly shall be permitted.

R703.3.1 Soffit installation Soffits shall comply with Sections R703.3.1.1, Section R703.3.1.2, or the manufacturer's installation instructions.

~~**R703.3.1**~~ **R703.3.1.1** ~~**Roof overhang**~~ **Wood structural panel soffit** ~~**nominal thickness and attachment.**~~ The minimum nominal thickness for wood structural panel ~~roof overhang~~ soffits shall be 3/8 in~~accordance~~ . and shall be fastened to framing or nailing strips with ~~Table R703.3(1)~~ 2" x 0.099" nails. Fasteners ~~for wood structural panel roof overhang soffits~~ shall be ~~in accordance with Section R703.3.3~~ spaced not less than 6 inches on center at panel edges and ~~Table R703.3(1).~~ 12 inches on center at intermediate supports ~~Manufactured soffit panels shall be installed in accordance with the manufacturer's installation instruction for the design wind loads required in Section R703.1.2.~~

~~**R703.11.1.4**~~ **R703.3.1.2 Vinyl soffit panels.** Soffit panels shall be ~~individually~~ fastened at fascia and wall ends and to ~~a supporting component such~~ intermediate nailing strips as ~~a nailing strip~~ necessary to ensure that there is no unsupported span greater than 16 inches, ~~fascia or subfascia component~~ or as specified by the manufacturer's instructions.

R703.3.2 Wind limitations. Where the design wind pressure exceeds 30 psf or where the limits of Table R703.3.2 are exceeded, the attachment of wall coverings and ~~roof overhang~~ soffits shall be designed to resist the component and cladding loads specified in Table R301.2(2) for walls, adjusted for height and exposure in accordance with Table R301.2(3). For the determination of wall covering and ~~roof overhang~~ soffit attachment, component and cladding loads shall be determined using an effective wind area of 10 square feet (0.93 m^2).

Committee Reason: With the modification this proposal will improve the durability of soffits in high wind regions while allowing continued use of traditional soffit materials in the low wind regions. The modification solves a lot of problems with the original proposal and provides prescriptive requirements and reference to manufacturers instructions for soffits in low wind regions while providing performance requirement for high wind regions.

Assembly Action: **None**

Individual Consideration Agenda

Public Comment 1:

Proponent : Christopher Macomber, representing LP Building Products requests Approve as Modified by this Public Comment.

Further Modify as Follows:

2015 International Residential Code

R703.3.1.3 Hardboard soffit panels. Hardboard soffit panels shall be a minimum of 7/16 inches in thickness and shall be fastened to framing or nailing strips with 2 ½ " x 0.113" siding nails spaced not more than 6 inches on center at panel edges and 12 inches on center at intermediate supports.

Commenter's Reason: This public comment simply adds prescriptive provisions for the installation of hardboard soffit panels to complement the new prescriptive provisions for wood structural panel and vinyl soffit panels that were approved by the IRC Building Committee at the CAH. We are aware that there is a public comment to relocate the soffit provisions to a new Section R704. However, we did not get our comment developed in sufficient time to be included that public comment. However, we anticipate that if this public comment and the public comment relocating the soffit provisions are approved, the provisions for hardboard soffit panels would also be relocated to Section R704 with the other prescriptive provisions for soffit panels. We urge your support.

Public Comment 2:

Proponent : T. Eric Stafford, PE, representing AECOM; Glenn Overcash, representing FEMA (glenn.overcash@aecom.com) requests Approve as Modified by this Public Comment.

Replace Proposal as Follows:

2015 International Residential Code

SECTION R704 SOFFITS

R704.1 General wind limitations. Where the design wind pressure exceeds 30 psf, soffits shall be designed to resist the component and cladding loads specified in Table R301.2(2) for the adjacent wall, adjusted for height and exposure in

accordance with Table R301.2(3). Where the design wind pressure is 30 psf or less, soffits shall be in accordance with Sections R704.2.

R704.2 Soffit installation. Soffits shall comply with Section R704.2.1, Section R704.2.2, Section R704.2.3 or be installed in accordance with the manufacturer's installation instructions.

R704.2.1 Wood structural panel soffit. Wood structural panel soffit panels shall be a minimum of 3/8 inches in thickness and shall be fastened to framing or nailing strips with minimum 2" x 0.099" siding nails spaced not more than 6 inches on center at panel edges and 12 inches on center at intermediate supports.

R704.2.2 Vinyl soffit panels. Vinyl soffit panels shall be installed using fasteners specified by the manufacturer and shall be fastened at both ends to a supporting component such as a nailing strip, fascia or subfascia component or as specified by the manufacturer's installation instructions. Where the unsupported span of soffit panels is greater than 16 inches, intermediate nailing strips shall be provided.

R704.2.3 Fiber-cement soffit panels. Fiber-cement soffit panels shall be a minimum of 1/4 inch thick and joints shall occur over framing or over wood structural panel sheathing. Soffit panels shall be installed with spans and fasteners in accordance with the manufacturer's installation instructions.

Commenter's Reason: RB282-16 was approved as modified to clarify design wind loads on soffits and to provide prescriptive guidance on soffit installation in the code for certain materials where the design wind pressure does not exceed 30 psf. Working with industry and affected groups, a modification very similar to the one proposed in this Public Comment was submitted for consideration at CAH in Louisville. However, due to extent of the changes in that modification, it was ruled out of order. The technical provisions in the modification in this public comment are essentially the same as modification approved at the CAH. This public comment proposes to relocate the provisions for soffits to a new Section R704 and also refines the prescriptive attachment options based on discussions with affected industry groups.
Relocating the soffit provisions to new a standalone Section R704 will help to improve implementation by builders and verification by building code officials. Section R703 of the 2015 IRC is lengthy (18 pages) and mainly applies to exterior coverings of vertical assemblies. A soffit is similar to a wall in it's purpose and design wind loads, but is unique due to its horizontal orientation. As such, the new soffit provisions, as approved at the CAH, could be easily overlooked by users in Section R703. Additionally, new soffit provisions can easily be added as needed with this improved organization and simplified format.

In summary, this public comment clarifies the soffit panel installation provisions approved at the CAH and expands and refines the presriptive installation options for lower wind regions.

RB282-16

RB283-16
IRC: R703.2.

Proposed Change as Submitted

Proponent : Jay Crandell, P.E., ARES Consulting, representing Foam Sheathing Committee of the American Chemistry Council

2015 International Residential Code

R703.2 Water-resistive barrier. One layer of No. 15 asphalt felt, free from holes and breaks, complying with ASTM D 226 for Type 1 felt or other approved water-resistive barrier shall be applied over studs or sheathing of all exterior walls. ~~Such~~ No.15 asphalt felt ~~or material~~ shall be applied horizontally, with the upper layer lapped over the lower layer not less than 2 inches (51 mm). Where joints occur, felt shall be lapped not less than 6 inches (152 mm). Other approved materials shall be installed in accordance with the *water-resistive barrier* manufacturer's installation instructions. The No. 15 asphalt felt or other approved*water-resistive barrier* material shall be continuous to the top of walls and terminated at penetrations and building appendages in a manner to meet the requirements of the exterior wall envelope as described in Section R703.1. The water-resistive barrier is not required for detached accessory buildings.

Reason: This proposal clarifies requirements for No. 15 asphalt felt and distinguishes requirements for other approved water-resistive barriers (WRBs) to imporve application and enforceability. The specific installation instructions currently provided in the code apply only to a traditional application of No.15 asphalt felt (and some types of membrane WRBs, but not always) and are exclusionary if applied to all other approved WRB materials as the code currently implies. While some other approved materials may use the same or similar installation details, they are frequently different. Also, the lapping method is impractical and exclusionary for some other approved materials, such as sheathing-type WRBs, that rely on approved sealed joints (e.g., adhered flashing or joint sealing tape) which also are used to enhance minimally lapped joints on membrane-type WRBs (and are often required at intersections with penetrations to provide continuity of the WRB). Thus, the phrase "or material" is stricken to avoid the unintended (and exclusionary) implication that all "other approved materials" (as mentioned in the first sentence) must be installed like No. 15 asphalt felt with lapped joints (as indicated in the second sentence for other materials than No. 15 felt). In coordination with the above change, it is made clear that other approved materials shall be installed in accordance with the manufacturer's installation instructions. Finally, it is made clear that continuity of the WRB (last sentence) applies to both No. 15 asphalt felt and any other approved WRB material.

Cost Impact: Will not increase the cost of construction
The proposal clarifies requirements and may actually help avoid unintended cost impacts or material choice limitations.

RB283-16 :
R703.2-
CRANDELL12648

Public Hearing Results

Committee Action: **Approved as Submitted**

Committee Reason: The committee approved this proposal based on the proponents published reason statement. This clarifies the horizontal application and lapping only applies to No.15 felt.

Assembly Action: **None**

Individual Consideration Agenda

Public Comment 1:

Proponent : Theresa Weston, DuPont Protective Solutions, representing DuPont Building Innovations (theresa.a.weston@dupont.com) requests Approve as Modified by this Public Comment.

Modify as Follows:

2015 International Residential Code

R703.2 Water-resistive barrier. One layer of No. 15 asphalt felt, free from holes and breaks, complying with ASTM D 226 for Type 1 felt or other approved water-resistive barrier shall be applied over studs or sheathing of all exterior walls. No.15 asphalt felt shall be applied horizontally, with the upper layer lapped over the lower layer not less than 2 inches (51 mm). Where joints occur, felt shall be lapped not less than 6 inches (152 mm). ~~Other approved materials~~ Water-resistive barriers shall be installed in accordance with ~~the *water-resistive barrier*~~ manufacturer's installation instructions~~. The No. 15 asphalt felt or other approved *water-resistive barrier* material~~ , and shall be continuous to the top of walls and terminated at penetrations

and building appendages in a manner to meet the requirements of the exterior wall envelope as described in Section R703.1. The water-resistive barrier is not required for detached accessory buildings.

Commenter's Reason: This modification simplifies the original proposal by removing extraneous text and clarifies that all water resistive barriers, not just alternate materials, shall be installed using manufacturer's installation instructions.

RB283-16

RB285-16
IRC: R703.2.

Proposed Change as Submitted

Proponent : Theresa Weston, representing DuPont Building Innovations (theresa.a.weston@dupont.com)

2015 International Residential Code

R703.2 Water-resistive barrier. ~~One~~ A water resistant barrier shall be not fewer than one layer of ~~No. 15 asphalt felt,~~ one of the following materials,

1. No. 15 asphalt felt, ~~free from holes and breaks~~ complying with ASTM D 226 for Type 1 felt
2. Grade D building paper or other water-resistive barrier, complying with ASTM E2556, or
3. other approved material.

The water-resistive barrier free from holes and breaks, ~~complying with ASTM D 226 for Type 1 felt or other approved water-resistive barrier~~ shall be applied over studs or sheathing of all exterior walls. ~~Such felt or material~~ The water-resistive barrier shall be applied horizontally, with the upper layer lapped over the lower layer not less than 2 inches (51 mm). Where joints occur, felt shall be lapped not less than 6 inches (152 mm). The ~~felt or other approved material~~ water-resistive barrier shall be continuous to the top of walls and terminated at penetrations and building appendages in a manner to meet the requirements of the exterior wall envelope as described in Section R703.1. The water-resistive barrier is not required for detached accessory buildings.

Reference standards type: This reference standard is new to the ICC Code Books
Add new standard(s) as follows:
ASTM E2556-10 Standard Specification for Vapor Permeable Flexible Sheet Water-Resistive Barriers Intended for Mechanical Attachment

Reason: This proposal adds a second reference standard for water-resistive barriers. The new reference standard, ASTM E2556, includes housewraps and building papers as well as felt, which is currently the only referenced material. All of the materials recognized in ASTM E2556 are installed in the manner described in Section R703.2. Based on discussion with other industry members, the current reference to ASTM D226 for felt was not replaced.
ASTM E2556 is based on ICC-ES Acceptance Criteria AC-38, the standard by which building papers and housewraps are currently evaluated, so does not constitute a change in water-resistive barrier performance criteria. This inclusion of ASTM E2556 will add recognition to housewraps as a water-resistive barrier. This is appropriate as housewraps are the dominant water-resistive barrier currently in the industry. According to the 2011 new home construction survey 75% of new starts used a housewrap. Housewraps have been in market and performing for over 30 years. Currently there are over 100 housewrap products evaluated as water-resistive barrier alternate materials.

Cost Impact: Will not increase the cost of construction
The requirements in the referenced standard are consistent with requirements in ICC-ES Acceptance Criteria AC-38, the most broadly used water-resistive barrier qualification criteria, so will not change the water-resistve barrier requirements or costs associated with them.

Analysis: A review of the standard(s) proposed for inclusion in the code,ASTM E 2556-10, with regard to the ICC criteria for referenced standards (Section 3.6 of CP#28) will be posted on the ICC website on or before April 1, 2016.

RB285-16 :
R703.2-
WESTON13028

Public Hearing Results

Committee Action: **Disapproved**

Committee Reason: Based on the the discussion concerning the issue that ASTM E2556 does not require a full scale test for acceptance and the committee's prior action on RB283-16. RB283-16 removed the lap joint for everything except No. 15 felt and this would create a conflict by putting it back in.

Assembly Action: **None**

Individual Consideration Agenda

Public Comment 1:

Proponent : Theresa Weston, representing DuPont Building Innovations (theresa.a.weston@dupont.com) requests Approve as Modified by this Public Comment.

Modify as Follows:

2015 International Residential Code

R703.2 Water-resistive barrier. A water resistant barrier shall be not fewer than one layer of one of the following materials,

1. No. 15 asphalt felt, complying with ASTM D 226 for Type 1 felt
2. Grade D building paper or other water-resistive barrier, complying with ASTM E2556, or
3. other approved material.

The water-resistive barrier free from holes and breaks, shall be applied over studs or sheathing of all exterior walls. The water-resistive barrier shall be applied horizontally, with the upper layer lapped over the lower layer not less than 2 inches (51 mm). Where joints occur, felt shall be lapped not less than 6 inches (152 mm). The water-resistive barrier shall be installed in accordance with the manufacturer's installation instructions and shall be continuous to the top of walls and terminated at penetrations and building appendages in a manner to meet the requirements of the exterior wall envelope as described in Section R703.1. The water-resistive barrier is not required for detached accessory buildings.

Commenter's Reason: This public comment modifies the proposal to add the provision that water-resistive barriers be installed in accordance with the manufacturer's installation. This public comment also seeks to reconsider committee action on the inclusion in the IRC of a material reference consensus standard, to clarify information about that standard and correct misleading testimony about the evaluation of mechanically attached thin sheet water-resistive barriers.
Currently, only #15 felt is referenced directly in the code. All other products are approved as alternate materials. Different types of materials are approved through different acceptance criteria as determined by ICC-ES. Thin sheet materials, including building papers and housewraps, are evaluated as materials only and installation is not evaluated because they are installed in shingle fashion prescriptively provided in the IRC:

"applied horizontally, with the upper layer lapped over the lower layer not less than 2 inches (51 mm). Where joints occur, felt shall be lapped not less than 6 inches (152 mm)."

Shingle fashion installation provides a physical barrier to water entry in walls.

Some other types of water-resistive barriers rely on tapes or sealants at joints rather than physical shingling. Because the performance of tapes and sealants depends on chemical adhesion and is subject to failure if installed under non-optimum installation conditions, the evaluation of these water-resistive barriers must include evaluation of the adhesion, compatibility and durability of the sealed joint. The photo below shows failure on taped joints during laboratory testing. When these taped joints failed they created a reversed shingle joint which can channel water into the wall assembly.

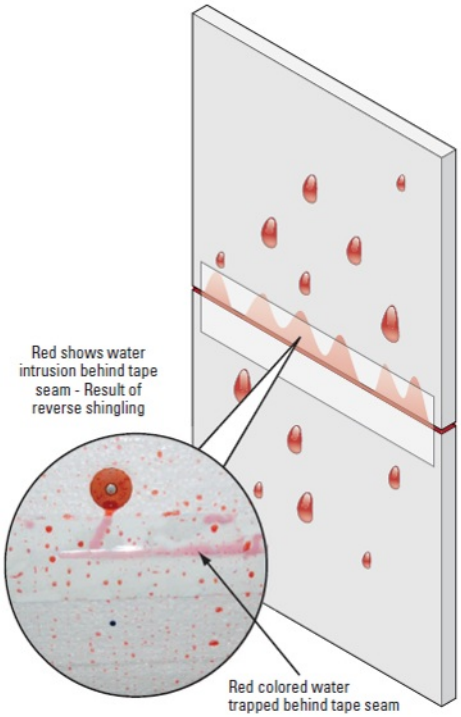

The reference standard proposed in this proposal, ASTM E2556, includes housewraps and building papers as well as felt. All of the materials recognized in ASTM E2556 are installed in the shingle fashion described above. ASTM E2556 is based on ICC-ES Acceptance Criteria AC-38, the standard by which building papers and housewraps are currently evaluated, so does not constitute a change in evaluated water-resistive barrier performance criteria. So if this doesn't change the actual evaluation criteria, why reference a standard? Including a reference standard provides an opportunity for continuous technical review of the standard and its included criteria. So as the state of the art of water-resistive barriers is advanced it can be included in the standard.

The inclusion of ASTM E2556 will add recognition to housewraps as a water-resistive barrier. This is appropriate as housewraps are the dominant water-resistive barrier currently in the industry. According to the 2011 new home construction survey 75% of new starts used a housewrap. Housewraps have been in market and performing for over 30 years. Currently there are over 100 housewrap products evaluated as water-resistive barrier alternate materials.

RB285-16

RB286-16
IRC: R703.2.1 (New).

Proposed Change as Submitted

Proponent : Jay Crandell, P.E., ARES Consulting, representing Foam Sheathing Committee of the American Chemistry Council

2015 International Residential Code

Add new text as follows:

R703.2.1 Installed water-penetration resistance. Other approved *water-resistive barrier* materials shall be installed in accordance with the manufacturer's installation instructions. The installation method shall have water penetration resistance at least equivalent to accepted practice for installation of No. 15 asphalt felt.

Reason: This proposal specifies that other approved water-resistive barrier materials be installed in accordance with the manufacturer's installation instructions to assist in enforcement and proper application. It provides a consistent basis for ensuring equivalent performance of water-resistive barriers as installed. Because No. 15 felt is considered to be the minimum benchmark for water-resistive barrier installed performance (water penetration resistance), the requirements for No.15 felt remain unchanged. Furthermore, it is more clearly identified as the benchmark for equivalency for other approved materials and installation methods. Typically, equivalency would be shown by way of an ASTM E331 test method, which currently is applied inconsistently (or not at all) among other approved materials. The current lack of direction in the code has resulted in inequities as well as poor performance in some cases.
The need for a uniform and effective water-penetration resistance requirement is documented in the literature (Hall and Hoigard, 2005; Dorin, 2006; Lstiburek, 2012). In particular, Hall and Hoigard (2005) evaluated current code requirements, acceptance criteria, and field experience. They also report comparative test data under installed water exposure conditions, demonstrating that polymeric building wrap materials are capable of performing equivalently to asphalt-saturated paper and felt materials (but not all types). The relevant conclusions from this study include:

> *"Current building code provisions offer no rational means of assessing the equivalency of alternative WRB products to ASTM D-266 type 1 asphalt-saturated felt."*
>
> *"They [material-only water resistance tests] fail to address several important moisture transport mechanisms that affect the in-service performance of WRBs."*

The proposed requirements are consistent with the intent to ensure equivalency between code-recognized materials and methods (e.g., asphalt felt) and other alternative water-resistive barrier materials and methods. Therefore, this proposal will help to ensure acceptable and consistent performance of various types of alternative WRB materials and methods in an effective and non-exclusionary way. The justification is further supplemented with a review of data from various test standards, approved agencies, and technical literature (ABTG, 2015).

Bibliography: ABTG. (2015). Water-Resistive Barriers: Assuring Consistent Assembly Water Penetration Resistance, Research Report No. 1504-3, Applied Building Technology Group, LLC (www.appliedbuildingtech.com/research-reports)
Dorin, L. (2005). The Importance of Integrating Flashing and the Water Resistive Barrier in the Exterior Wall Systems of Residential Buildings, *Journal of the ASTM International*, Vol. 3, No. 5, ASTM International, West Conshohocken, PA.

Hall, G.D. and Hoigard, K.R., "Water-Resistive Barriers: How do they compare?", *Interface*, November 2005.

Lstiburek, J., "Leaks & Holes", *ASHRAE Journal*, December 2012.

Cost Impact: Will not increase the cost of construction
The proposal only addresses the performance requirements for other approved materials to ensure equivalent performance as intended by the code. Requirements for many (if not most) types of alternative materials that are currently properly qualified will remain unaffected and have no cost impact. In addition, requirements for code-recognized conventional materials, like No.15 felt, are unchanged and have no cost impact.

RB286-16 :
R703.2.1 (NEW)-
CRANDELL12663

Public Hearing Results

Committee Action: **Disapproved**

Committee Reason: The language of accepted practice for installation does not provide sufficient detail to establish equivalency for other water-resistive barriers.

Assembly Action: **None**

Individual Consideration Agenda

Public Comment 1:

Proponent : Jay Crandell, P.E., ARES Consulting, representing Foam Sheathing Committee of the American Chemistry Council (jcrandell@aresconsulting.biz) requests Approve as Modified by this Public Comment.

Modify as Follows:

2015 International Residential Code

R703.2.1 Installed water-penetration resistance. Other approved *water-resistive barrier* materials shall be installed in accordance with the manufacturer's installation instructions. The installation method shall have water penetration resistance at least equivalent to ~~accepted practice for installation of~~ No. 15 asphalt felt installed in accordance with Section R703.2.

Commenter's Reason: While the importance of addressing installed water-resistance performance of water-resistive barriers in an equivalent fashion was recognized at the hearing and well-supported in the reason statement to the original RB286 proposal, the residential building committee felt that "accepted practice" was too vague. Thus, this public comment provides a clarification that minimum installation requirements must be used for the purpose of establishing an equivalency benchmark to No. 15 felt as intended by Section 104.11 of the code.

RB286-16

RB287-16

IRC: R703.4, R703.4.1 (New), R703.4.2 (New).

Proposed Change as Submitted

Proponent : Jay Crandell, P.E., ARES Consulting, representing Foam Sheathing Committee of the American Chemistry Council

2015 International Residential Code

R703.4 Flashing. ~~Approved corrosion-resistant flashing~~

Exterior walls shall be ~~applied shingle-fashion~~ flashed in ~~a manner to prevent entry of water into the wall cavity or penetration of water to the building structural framing components. Self-adhered membranes used as flashing shall comply~~ accordance with ~~AAMA 711~~ this section. ~~Fluid-applied membranes used as flashing in exterior walls shall comply with AAMA 714. The flashing shall extend to the surface of the exterior wall finish. Approved corrosion-resistant flashings shall be installed at the following locations:~~

1. ~~Exterior window and door openings. Flashing at exterior window and door openings shall extend to the surface of the exterior wall finish or to the water-resistive barrier complying with Section 703.2 for subsequent drainage. Mechanically attached flexible flashings shall comply with AAMA 712. Flashing at exterior window and door openings shall be installed in accordance with one or more of the following:~~
   - ~~1.1. The fenestration manufacturer's installation and flashing instructions, or for applications not addressed in the fenestration manufacturer's instructions, in accordance with the flashing manufacturer's instructions. Where flashing instructions or details are not provided, pan flashing shall be installed at the sill of exterior window and door openings. Pan flashing shall be sealed or sloped in such a manner as to direct water to the surface of the exterior wall finish or to the water-resistive barrier for subsequent drainage. Openings using pan flashing shall incorporate flashing or protection at the head and sides.~~
2. ~~In accordance with the flashing design or method of a registered design professional.~~
3. ~~In accordance with other approved methods.~~
4. ~~At the intersection of chimneys or other masonry construction with frame or stucco walls, with projecting lips on both sides under stucco copings.~~
5. ~~Under and at the ends of masonry, wood or metal copings and sills.~~
6. ~~Continuously above all projecting wood trim.~~
7. ~~Where exterior porches, decks or stairs attach to a wall or floor assembly of wood-frame construction.~~
8. ~~At wall and roof intersections.~~
9. ~~At built-in gutters.~~

R703.4.1 Materials. Approved corrosion-resistant flashing materials shall include one or more of the following:

1. Self-adhered membranes complying with AAMA 711;
2. Fluid-applied membranes complying with AAMA 714;
3. Mechanically attached flexible flashings complying with AAMA 712;
4. Corrosion-resistant plastic flashing;
5. Corrosion-resistant metal flashing; or,
6. Other *approved* flashing materials.

R703.4.2 Installation. Flashing materials complying with Section R703.4.1 shall be applied in a manner to prevent entry of water into the wall cavity or penetration of water to the building structural framing components. Where multiple flashing components of the same or different materials are used and intersect each other, they shall be applied in shingle fashion or in accordance with an *approved* design. The flashing shall extend from the flashed component to the surface of the exterior wall finish or to the *water-resistive barrier* complying with Section R703.2 for subsequent drainage. Approved corrosion-resistant flashings shall be installed at the following locations:

1. Exterior window and door openings. Flashing at exterior window and door openings shall be installed in accordance with one or more of the following:
   - 1.1. The fenestration manufacturer's installation and flashing instructions.
   - 1.2. The flashing manufacturer's installation instructions.
   - 1.3. The water-resistive barrier manufacturer's installation instructions.
   - 1.4. In accordance with the flashing design or method of a registered design professional.
   - 1.5. In accordance with other approved methods.
     - **Exception:** Where flashing is provided by a means different than specified above, pan flashing shall be installed at the sill of exterior window and door openings. Pan flashing shall be sealed or sloped in such a manner as to direct water to the surface of the exterior wall finish or to the *water-resistive barrier* for subsequent drainage. Openings using pan flashing shall incorporate flashing or protection at the head

and sides.

2. At the intersection of chimneys or other masonry construction with frame or stucco walls, with projecting lips on both sides under stucco copings.
3. Under and at the ends of masonry, wood or metal copings and sills.
4. Continuously above all projecting wood trim.
5. Where exterior porches, decks or stairs attach to a wall or floor assembly of wood-frame construction.
6. At wall and roof intersections.
7. At built-in gutters.

Reason: This proposal improves organization, usability, and enforceability by distinguishing material requirements from installation requirements. It also makes a number of clarifications and improvements to installation requirements. For example, the proposal corrects an inconsistency in the current code whereby flashing must extend to the exterior wall finish in Section R703.4, but later in Item 1 is allowed to also extend to the water-resistive barrier surface. The requirement in Item 1 for flashing to extend from the window or door to the exterior wall finish or WRB is a general requirement that should apply for all flashing of all components. Thus, this language is moved to the charging language in a new Section R703.4.2 on installation to have broader applicability as appropriate.
In addition, flexible mechanically attached flashing referenced in Item 1 is a flashing material as are fluid-applied and adhered membrane flashing materials currently listed separately in Section R703.4. All of these flashing material types should be addressed in one section as done in this proposal by creating a new subsection R703.4.1 on materials. Additional common flashing materials and other approved materials are included for completeness.

The concept of a "shingle fashion" installation of flashing is improved to avoid an exclusionary implication that would prevent some approved methods of application of flashing materials at specific flashing locations. However, it preserves the desired effect of having flashings lap in "shingle fashion" where they intersect. While flashings are generally applied in a sequentional shingle lapped fashion, there are specific applications where this is not required and would be exclusionary or impractical. For example, self-adhered membranes are commonly used as a sealed-joint flashing at window heads for applications with sheathing-type water-resistive barriers and "shingle lap" flashing is not required at this location for this flashing material and method. Manufacturer installation instructions or an approved design are also recognized as important factors to ensure appropriate flashing and provide flexibility for special conditions.

Finally, this proposal re-organizes the list of accepted methods for flashing of exterior window and door openings to better identify and distinguish the appropriate sources for flashing details and methods. Any one of these methods can independently provide appropriate and code-compliant flashing methods and details for windows suited to a particular application. No one source can feasibly claim (and in some cases has no desire to claim) solutions to all possible applications involving numerous potentional combinations of different material types and substrates and components to be integrated. In addition, the water-resistive barrier manufacturer's instructions are added to the list since these materials and associated flashing/penetration details are often included in product approvals and are system-dependent. Also, the pan flashing requirement is moved to an exception statement that applies more sensibly to the entire list of methods since it is intended to be a "catch-all" condition that provides some additional level of protection of openings. It is also clarified that this "catch-all" use of pan flashing is not intended to be a substitute for having no other flashing at all applied to the window or door opening. Instead, it is clarified that pan flashing is to be used where the flashing approach was not qualified by or based on one of the listed sources for flashing methods and materials.

Cost Impact: Will not increase the cost of construction
This proposal is a clarification without changing the many options for compliance and adds an additional option.

RB287-16 :
R703.4-
CRANDELL12597

Public Hearing Results

Committee Action: **Disapproved**

Committee Reason: This proposal does a lot to simplify and clear up Section R703.4. However, the committee is concerned about removal of the hierarchy on whose installation instruction to follow first. This should be worked out with interested parties and brought back as a public comment.

Assembly Action: **None**

Individual Consideration Agenda

Public Comment 1:

Proponent : Jay Crandell, P.E., ARES Consulting, representing Foam Sheathing Committee of the American Chemistry Council (jcrandell@aresconsulting.biz) requests Approve as Modified by this Public Comment.

Modify as Follows:

2015 International Residential Code

R703.4 Flashing. Exterior walls shall be flashed in accordance with this section.

R703.4.2 Installation. Flashing materials complying with Section R703.4.1 shall be applied in a manner to prevent entry of water into the wall cavity or penetration of water to the building structural framing components. Where multiple flashing components of the same or different materials are used and intersect each other, they shall be applied in shingle fashion or in accordance with an *approved* design. The flashing shall extend from the flashed component to the surface of the exterior wall finish or to the *water-resistive barrier* complying with Section R703.2 for subsequent drainage. Approved corrosion-resistant flashings shall be installed at the following locations:

1. Exterior window and door openings. Flashing at exterior window and door openings shall be installed in accordance with one or more of the following:
    1.1. The fenestration manufacturer's installation and flashing instructions.
    1.2. The flashing manufacturer's installation instructions.
    1.3. The water-resistive barrier manufacturer's installation instructions.
    1.4. ~~In accordance with the flashing design or method of a registered design professional.~~
    1.5. ~~In accordance with other approved methods.~~
    - **Exception:** Where flashing is provided by a means different than specified above, pan flashing shall be installed at the sill of exterior window and door openings. Pan flashing shall be sealed or sloped in such a manner as to direct water to the surface of the exterior wall finish or to the *water-resistive barrier* for subsequent drainage. Openings using pan flashing shall incorporate flashing or protection at the head and sides.
2. At the intersection of chimneys or other masonry construction with frame or stucco walls, with projecting lips on both sides under stucco copings.
3. Under and at the ends of masonry, wood or metal copings and sills.
4. Continuously above all projecting wood trim.
5. Where exterior porches, decks or stairs attach to a wall or floor assembly of wood-frame construction.
6. At wall and roof intersections.
7. At built-in gutters.
8. <u>At any required location, in accordance with an approved method or method of a registered design professional.</u>

Commenter's Reason: The RB287 proposal was recognized by the residential building committee as an improved organization and refinement of the flashing provisions to "clear up Section R703.4". However, concern was expressed with regard to the hierarchy of requirements. This public comment resolves the hierarchy concern by applying the other approved methods or designed flashing solution to the entire list of flashing locations as appropriate (not just exterior window and door openings).

RB287-16

RB289-16
IRC: R703.4.

Proposed Change as Submitted

Proponent : Theresa Weston, representing DuPont Building Innovations (theresa.a.weston@dupont.com)

2015 International Residential Code

R703.4 Flashing. Approved corrosion-resistant flashing shall be applied shingle-fashion in a manner to prevent entry of water into the wall cavity or penetration of water to the building structural framing components. ~~Self-adhered membranes used as flashing shall comply with AAMA 711. Fluid-applied membranes used as flashing in exterior walls shall comply with AAMA 714.~~ The flashing shall extend to the surface of the exterior wall finish. Approved corrosion-resistant flashings shall be installed at the following locations:

1. Exterior window and door openings. Flashing at exterior window and door openings shall extend to the surface of the exterior wall finish or to the water-resistive barrier complying with Section 703.2 for subsequent drainage. Self-adhered membranes used as flashing shall comply with AAMA 711. Fluid-applied membranes used as flashing in exterior walls shall comply with AAMA 714. Mechanically attached flexible flashings shall comply with AAMA 712. Flashing at exterior window and door openings shall be installed in accordance with one or more of the following:
    1.1. The fenestration manufacturer's installation and flashing instructions, or for applications not addressed in the fenestration manufacturer's instructions, in accordance with the flashing manufacturer's instructions. Where flashing instructions or details are not provided, pan flashing shall be installed at the sill of exterior window and door openings. Pan flashing shall be sealed or sloped in such a manner as to direct water to the surface of the exterior wall finish or to the water-resistive barrier for subsequent drainage. Openings using pan flashing shall incorporate flashing or protection at the head and sides.
2. In accordance with the flashing design or method of a registered design professional.
3. In accordance with other approved methods.
4. At the intersection of chimneys or other masonry construction with frame or stucco walls, with projecting lips on both sides under stucco copings.
5. Under and at the ends of masonry, wood or metal copings and sills.
6. Continuously above all projecting wood trim.
7. Where exterior porches, decks or stairs attach to a wall or floor assembly of wood-frame construction.
8. At wall and roof intersections.
9. At built-in gutters.

Reason: This proposal moves the two reference standards AAMA-714 and AAMA-711 into the window flashing section rather than in the general charging section to be more consistent with the scope of the standards. The scope of AAMA-711 is for "self-adhering flashing surrounding exterior wall fenestration products". The scope of AAMA-714 is for "exterior wall openings in buildings that includes fenestration products such as windows and doors, as other through-wall penetrations"

Cost Impact: Will not increase the cost of construction
This proposal is a reorganization for clarity and does not change code requirements.

RB289-16 :
R703.4-
WESTON13077

Public Hearing Results

Committee Action: **Disapproved**

Committee Reason: Moving both of the referenced standards from the body of Section R703.4 into Item 1 may have the consequence of limiting their application which would be in conflict with their scope. The proponent should resolve this with interested parties and bring this back as a public comment.

Assembly Action: **None**

Individual Consideration Agenda

Proponent : Julie Ruth, representing American Architectural Manufacturers Association (julruth@aol.com) requests Approve as Submitted.

Commenter's Reason: The purpose of RB289 was to simply move two referenced standards, AAMA 711 and AAMA 714, into

a subsection of Section R703.4 of the IRC that more closely matches the scope of the standards. Currently AAMA 711 and AAMA 714 are referenced in the charging paragraph of R703.4, which addresses flashing of exterior wall covering to provide weather resistance of the exterior wall system. RB289 sought to move reference to AAMA 711 and AAMA 714 to Item 1 of Sectoin R703.4. Item 1 addresses flashing of exterior window and door openings. The scope of AAMA 711 is "self-adhering flashing surrounding exterior wall fenestration products". The scope of AAMA 714 is "exterior wall openings in buildings that includes fenestration products such as windows and doors, as other through wall penetrations." Moving reference to two standards that are intended to address flashing of fenestration products into the section of the IRC that deals most specifically with flashing of openings for fenestration products seems to be a fairly obvious, noncontroversial improvement of the IRC.

AAMA was surprised and alarmed to hear opponents to the move argue instead in favor of leaving the standards in their current location, and revising their scope to address applications that were not intended or considered when the standards were developed. AAMA gives deep consideration to the intended application of each standard it develops, and the appropriate criteria for the product addressed in the standard, based upon its intended application. Revising the scope of any AAMA standard would require a thorough re-examination of all of the criteria of the document, and may require areas of expertise that AAMA and its members do not have. It is AAMA's strong opinion that it cannot be forced to revise the scope of its documents by other parties. If other parties wish to have standards in the IRC that address applications that are not addressed within the scope of referenced AAMA standards, they can develop them in accordance with ICC Council Policy #28, as AAMA has done with AAMA 711 and AAMA 714, and then bring then to the ICC for consideration. In the meantime, proponents of materials and methods of construction that may not be addressed in existing referenced standards can seek evaluation of them in accordance with Section R104.11 of the IRC. Maintaining reference to standards in a more broadly based section of the IRC than appropriate is not the correct way to address this issue.

Proponent : Jay Crandell, P.E., ARES Consulting, representing Foam Sheathing Committee of the American Chemistry Council (jcrandell@aresconsulting.biz) requests Disapprove.

Commenter's Reason: The residential building committee made the correct decision to disapprove this proposal. The proposal would limit application of these standards in a way that is not consistent with the way they are being successfully used in the market and for code approval purposes. The standards, although originally written with window applications in mind, provide a much more generalized and appropraite means of qualifying flashing materials for a variety of substrates (which are addressed in the standard). There are other examples where standards have served a needed purpose in this manner even though they may have been originally conceived with a particular purpose or market interest in mind. This proposal also conflicts with RB287 which the committee felt was an improved organization and clarification of flashing material requirements and installation requirements.

RB289-16

RB291-16
IRC: R703.6.1.

Proposed Change as Submitted

Proponent : Jay Crandell, P.E., ARES Consulting, representing Foam Sheathing Committee of the American Chemistry Council

2015 International Residential Code

Revise as follows:

R703.6.1 Application. Wood shakes or shingles shall be applied either single course or double course ~~over nominal $^1/_2$-inch (12.7 mm) wood-based sheathing or~~ to horizontal furring strips ~~over $^1/_2$-inch (12.7 mm) nominal nonwood sheathing~~. A water-resistive barrier shall be provided ~~over all sheathing,~~ in accordance with ~~horizontal overlaps in the membrane of not less than 2 inches (51 mm) and vertical overlaps of not less than 6 inches (152 mm)~~ Section R703.2. ~~Where horizontal~~ Horizontal furring strips ~~are used, they~~ shall be 1 inch by 3 inches or 1 inch by 4 inches (25 mm by 76 mm or 25 mm by 102 mm) and shall be fastened to the studs with minimum 7d or 8d box nails ~~and~~ or in accordance with Sections R703.15, R703.16, or R703.17 where installed over foam plastic insulating sheathing. Furring shall be spaced a distance on center equal to the actual weather exposure of the shakes or shingles, not to exceed the maximum exposure specified in Table R703.6.1. ~~When installing shakes or shingles over a nonpermeable water-resistive barrier, furring strips shall be placed first vertically over the barrier and in addition, horizontal furring strips shall be fastened to the vertical furring strips prior to attaching the shakes or shingles to the horizontal furring strips.~~ The spacing between adjacent shingles to allow for expansion shall be $^1/_8$ inch (3.2 mm) to $^1/_4$ inch (6.4 mm) apart, and between adjacent shakes shall be $^3/_8$ inch (9.5 mm) to $^1/_2$ inch (12.7 mm) apart. The offset spacing between joints in adjacent courses shall be not less than $1^1/_2$ inches (38 mm).

Reason: This section is confusing and also creates an unjustified "double standard" whereby wood furring is not required in one case and in another case requiring a double-layered lattice of furring when a non-permeable water resistive barrier or substrate is used. This is not only confusing but is technically inconsistent and unjustified. Wood shakes and shingles are an air-permeable cladding and use of a single layer of horizontal furring over any substrate has proven to provide an adequate ventilated condition for wood shake/shingle durability (and not rely on inward moisture movement into the wall materials for purpose of dyring shingles), particularly given that when used over wood sheathing it currently is permitted to be installed without any furred air-space. The fact that wood shakes and shingles are considered inherently air-permeable is supported in the literature (Kerr 2004):

> *"Examples of simple rainscreen walls include vinyl siding or overlapping wood shingles and shakes on wood frame construction; in these wall types, small air spaces are created between the laps in the siding and the back-up board or strapping, effectively creating a vented out rainscreen layer with an inner cavity."* [p.22]

Furthermore, the USDA Forest Products Laboratory guide for wood shakes and shingles recognizes that not all wood sheathings are equivalent in regard to water permeance and that a distinction is needed in regard to even a "rainscreen" application of wood shakes and shingles over wood sheathing (Dwyer et al., 2011):

> *"Although the shakes and shingles are not nailed directly to the sheathing in rain-screen applications, most codes still require plywood sheathing. Plywood sheathing transmits moisture better than OSB; therefore, if it gets wet, it dries more quickly. A variance to use OSB in a rain-screen application needs to be requested before installing the sheathing."* [p.5]

Therefore, the goal of this change supports a widely recommended practice of a single layer of horizontal furring for constitently durable wood shake and shingle installation and to also protect from reliance on drying of shakes and shingles into wall assemblies when a furred air-space is not provided. It also creates a sensible "level playing field" for all types of sheathing (various types of wood and non-wood sheathing with varying water vapor permeance characteristics), removes the "double standard" as described above, and is also consistent with the British Columbia Wood Shake and Shingle Industry's Application Handbook which addresses a region that experiences significant rainfall and recommends a single layer of furring even for application on roofs over a non-permeable substrate (clearly showing a double layered lattice of furring is not necessary for similar application on walls). Refer to Figure 15 in that guide (see bibliography). Furthermore, FSC has conducted a case study of an existing application of wood shakes and shingles installed directly over foam sheathing (no furring) and found no evidence of performance or durability problems, even in a severe lake-front exposure in the Northeastern US. Thus, it is clearly evident that either a single layer of furring is adequate over a wide variety of sheathing and WRB substrates or that no furring is adequate. But, to require a double layer of furring in one case and none in the other is not justified by the evidence; it is a double standard. Consequently, this proposal takes the approach that the best practical and overall equitable solution for all substrates on light-frame wall assemblies and for wood shake and shingle performance is to uniformly require a single layer of horizontal furring.

In addition, Section R703.6.1 has an exclusionary specification of water-resistive barrier installation that requires lapped joints. Other approved sheathing-type water-resistive barriers do not require or rely on lapped joints. Thus, this proposal refers to requirements for water-resistive barriers in Section R703.2 where other approved methods are recognized and eliminates redundant and incomplete information in this section.

Finally, this proposal provides a needed link to new requirements for furring attachment addressed in a later section of R703 for cases where furring is installed over foam plastic insulating sheathing.

Bibliography: Application Handbook, BC Shake and Shingle Assocation, Mission, BC, Canada, www.mbmspecialty.com/downloads/ApplicationManual8c.pdf
Dwyer, J., Bonura, T., Nebelsick, A., Williams, S., Hunt, C. (2011). Installation, Care, and Maintenance of Wood Shake and Shingle Siding, General Technical Report FPL-GTR-202, USDA, Forest Products Lab, Madison, WI
Kerr, D. "Keeping Walls Dry", Part 1 of 2, CHMC/SCHL Canada, www.chmc-schl.gc.ca/

Cost Impact: Will increase the cost of construction
The proposal requires furring for installation of wood shakes and shingles over all types of substrates for reason of equivalent, reliable, and acceptable performance and durability. This may increase costs in cases where no furring is used at all, but in other cases it may decrease costs. Overall, this proposal should serve to decrease long-term costs to consumers for maintenance/replacement of wood shakes and shingles.

RB291-16 : R703.6.1-CRANDELL12756

Public Hearing Results

Committee Action: **Disapproved**

Committee Reason: Based on testimony the wood shakes and shingles needs the furring to allow drying from the backside. This proposal would eliminate the proper furring to allow the the drying from the backside.

Assembly Action: **None**

Individual Consideration Agenda

Public Comment 1:

Proponent : John Woestman, representing Kellen Company, representing Extruded Polystyrene Foam Association (XPSA) (jwoestman@kellencompany.com) requests Approve as Modified by this Public Comment.

Replace Proposal as Follows:

2015 International Residential Code

R703.6.1 Application. Wood shakes or shingles shall be applied either single course or double course over nominal $^{1}/_{2}$-inch (12.7 mm) wood-based sheathing or to furring strips over $^{1}/_{2}$-inch (12.7 mm) nominal nonwood sheathing. A water-resistive barrier shall be provided ~~over all sheathing,~~ in accordance with ~~horizontal overlaps in the membrane of not less than 2 inches (51 mm) and vertical overlaps of not less than 6 inches (152 mm)~~ Section R703.2. Where horizontal furring strips are used, they shall be 1 inch by 3 inches or 1 inch by 4 inches (25 mm by 76 mm or 25 mm by 102 mm) and shall be fastened to the studs with minimum 7d or 8d box nails and shall be spaced a distance on center equal to the actual weather exposure of the shakes or shingles, not to exceed the maximum exposure specified in Table R703.6.1. When installing shakes or shingles over a nonpermeable water-resistive barrier, furring strips shall be placed first vertically over the barrier and in addition, horizontal furring strips shall be fastened to the vertical furring strips prior to attaching the shakes or shingles to the horizontal furring strips. The spacing between adjacent shingles to allow for expansion shall be $^{1}/_{8}$ inch (3.2 mm) to $^{1}/_{4}$ inch (6.4 mm) apart, and between adjacent shakes shall be $^{3}/_{8}$ inch (9.5 mm) to $^{1}/_{2}$ inch (12.7 mm) apart. The offset spacing between joints in adjacent courses shall be not less than $1^{1}/_{2}$ inches (38 mm).

Commenter's Reason: Replaces the current rather ambiguous water-resistive barrier requirement, and prescriptive WRB installation requirements with a reference to Section R703.2, which includes broadly accepted prescriptive and performance requirements for WRBs.
The current language in R703.6.1 lacks explicit requirements for WRBs. For example, could it be successfully argued that waxed paper – which clearly does not meet WRB requirements elsewhere in the code – meets the current water-resistive barrier requirements of R703.6.1? A reference to R703.2 resolves this deficiency in R703.6.1.

Public Comment 2:

Proponent : John Woestman, representing Kellen Company, representing Extruded Polystyrene Foam Association (XPSA) (jwoestman@kellencompany.com) requests Approve as Modified by this Public Comment.

Replace Proposal as Follows:

2015 International Residential Code

R703.6.1 Application. Wood shakes or shingles shall be applied either single course or double course over nominal $^{1}/_{2}$-inch (12.7 mm) wood-based sheathing or to furring strips over $^{1}/_{2}$-inch (12.7 mm) nominal nonwood sheathing. A water-resistive barrier shall be provided over all sheathing, with horizontal overlaps in the membrane of not less than 2 inches (51 mm) and vertical overlaps of not less than 6 inches (152 mm). Where horizontal furring strips are used, they shall be 1 inch by 3 inches or 1 inch by 4 inches (25 mm by 76 mm or 25 mm by 102 mm) and shall be fastened to the studs with minimum 7d or 8d box nails ~~and~~ or in accordance with Sections R703.15, R703.16, or R703.17 where installed over foam sheathing. Horizontal furring strips, where used, shall be spaced a distance on center equal to the actual weather exposure of the shakes or shingles, not to exceed the maximum exposure specified in Table R703.6.1. When installing shakes or shingles over a nonpermeable water-resistive barrier, furring strips shall be placed first vertically over the barrier and in addition, horizontal furring strips shall be fastened to the vertical furring strips prior to attaching the shakes or shingles to the horizontal furring strips. The spacing between adjacent shingles to allow for expansion shall be $^{1}/_{8}$ inch (3.2 mm) to $^{1}/_{4}$ inch (6.4 mm) apart, and between adjacent shakes shall be $^{3}/_{8}$ inch (9.5 mm) to $^{1}/_{2}$ inch (12.7 mm) apart. The offset spacing between joints in adjacent courses shall be not less than $1^{1}/_{2}$ inches (38 mm).

Commenter's Reason: Where furring strips are fastened through foam sheathing, especially thicker foam sheathing, additional guidance would be appropriate for fastening the furring strips to the framing. The proposed references are to these IRC sections:
R703.15 Cladding attachment over foam sheathing to wood framing.
R703.16 Cladding attachment over foam sheathing to cold-formed steel framing.
R703.17 Cladding attachment over foam sheathing to masonry or concrete wall construction.

RB291-16

RB295-16

IRC: R702.1, R703.7, R703.7.1, R703.7.2, R703.7.3, R703.7.3.1 (New).

Proposed Change as Submitted

Proponent : Edward Kulik, representing Building Code Action Committee (bcac@iccsafe.org)

2015 International Residential Code

TABLE R702.1 (3)
CEMENT PLASTER PROPORTIONS, PARTS BY VOLUME

COAT	CEMENT PLASTER TYPE	CEMENTITIOUS MATERIALS				VOLUME OF AGGREGATE PER SUM OF SEPARATE VOLUMES OF CEMENTITIOUS MATERIALS[b]
		Portland Cement Type I, II or III or Blended Cement Type IP, I (PM), IS or I (SM)	Plastic Cement	Masonry Cement Type M, S or N	Lime	
First	Portland or blended	1			$^3/_4$ - $1^1/_2$[a]	$2^1/_2$ - 4
	Masonry			1		$2^1/_2$ - 4
	Plastic		1			$2^1/_2$ - 4
Second	Portland or blended	1			$^3/_4$ - $1^1/_2$	3 - 5
	Masonry			1		3 - 5
	Plastic		1			3 - 5
Finish	Portland or blended	1			$1^1/_2$ - 2[c] ~~$^3/_4$ - 2~~	$1^1/_2$ - 3
	Masonry			1		$1^1/_2$ - 3
	Plastic		1			$1^1/_2$ - 3

For SI: 1 inch = 25.4 mm, 1 pound = 0.454 kg.

a. Lime by volume of 0 to $^3/_4$ shall be used where the plaster will be placed over low-absorption surfaces such as dense clay tile or brick.

b. The same or greater sand proportion shall be used in the second coat than used in the first coat.

c. Lime by volume of ¾ to 1½ shall be used where the plaster will be placed over low-absorption surfaces such as dense clay tile or brick.

R703.7 Exterior plaster (stucco). ~~Installation of these materials~~
Exterior plaster (stucco) shall be installed in ~~compliance~~ accordance with ASTM C 926, ASTM C 1063 and the provisions of this ~~code~~ section.

R703.7.1 Lath. Lath and lath attachments shall be of corrosion-resistant materials in accordance with ASTM C 1063. Expanded metal, welded wire or woven wire lath shall be attached into wood framing members with $1^1/_2$-inch-long (38 mm), 11 gage nails having a $^7/_{16}$-inch (11.1 mm) head, or $^7/_8$-inch-long (22.2 mm), 16 gage staples, spaced not more than ~~6~~ 7 inches (178 mm) on center vertically and not more than 24 inches ~~(152 mm)~~ on center horizontally, or as otherwise approved. Lath attachments to cold-formed steel framing or to masonry, stone, or concrete substrates shall be in accordance with ASTM C 1063

R703.7.2 Plaster. Plastering with portland cement plaster shall be in accordance with ASTM C 926. Cement materials shall be in accordance with ASTM C 91, ASTM C 150, ASTM C 595 or ASTM C 1328. Plaster shall be not less than three coats where applied over metal lath or wire lath and shall be not less than two coats where applied over masonry, concrete, pressure-preservative-treated wood or decay-resistant wood as specified in Section R317.1 or gypsum backing. If the plaster surface is completely covered by veneer or other facing material or is completely concealed, plaster application need be only two coats, provided the total thickness is as set forth in Table R702.1(1).

On wood-frame construction with an on-grade floor slab system, exterior plaster shall be applied to cover, but not extend below, lath, paper and screed.

The proportion of aggregate to cementitious materials shall be as set forth in Table R702.1(3).

R703.7.3 Water-resistive barriers. Water-resistive barriers shall be installed as required in Section R703.2 and, where applied over wood-based sheathing, shall ~~include~~ have a ~~water-resistive vapor-permeable barrier with a performance at least equivalent~~ water resistance equal to ~~two layers~~ or greater than that of 60-minute Grade D paper~~. The individual layers shall~~ and be ~~installed independently such that each~~ separated from the stucco by an intervening, substantially non water-absorbing layer ~~provides a separate continuous plane and any flashing (installed in accordance with Section R703.4) intended to drain to the water-resistive barrier is directed between the layers~~ or designed drainage space.

> ~~**Exception:** Where the water-resistive barrier that is applied over wood-based sheathing has a water resistance equal to or greater than that of 60-minute Grade D paper and is separated from the stucco by an intervening, substantially nonwater-absorbing layer or designed drainage space.~~
>
> **Exception:** In dry climate zones, the water-resistive barrier shall be vapor permeable and shll have a performance at least equivalent to two layers of 10-minute Grade D paper. The individual layers shall be installed independently such that each layer provides a separate continuous plane and any flashing (installed in accordance with Section R703.4) intended to drain to the water-resistive barrer is directed between the layers.

R703.7.3.1 Furring. Furring between lath and vertical supports or solid sheating shall consist of wood furring strips not less than 1 inch by 2 inches (25 mm by 51 mm) in nominal dimension, minimum ¾" metal channels, or self-furring lath manufactured to provide a minimum 1/4 inch space between the lath and the vertical suppor or sheathing. Furring shall be spaced a maximum of 24 inches on center horizontally and, where installed over wood or cold-formed steel framing, shall be fastened into framing members.

Reason: The purpose of this code change is to correlate the requirements for exterior lath and plaster (stucco) with the requirements of ASTM C 926 and C 1063 and recommended practice. The code requirements in the IRC are not in alignment with the reference standards and lack key details needed to insure a good installation and minimize the risk of moisture intrusion.

In particular, the IRC lath attachment requirements state a 6" nail or staple spacing but do not specify direction or what nailing substrates are permitted. ASTM C 1063 specifies a 7" vertical spacing along and 16" to 24" horizontal spacing into wood studs. Without this clear direction in the code, some stucco is being installed with fasteners in a 6" grid pattern (both horizontal and vertical), leading to fasteners penetrating sheathing and providing a path for moisture intrusion behind the WRB and exterior sheathing and causing decay and water damage. The code user is referred to C 1063 for lath attachment requirements for other substrates, and is allowed to omit the lath when permitted by C 1063 for concrete substrates which have been properly prepared such that the plaster will bond directly to the concrete.

Also, the IRC does not include the requirement in C 1063 to provide furring behind expanded metal or wire lath except where such lath is self-furring, and that the furring shall create a minimum ¼" space between the lath and the vertical supports (framing, sheathing, or other vertical substrates). The furring requirement is added here using sizes consistent with other wood furring requirements in the IRC and the minimum channel size from C 1063. Again, the proposed language underscores that furring attachment to metal or wood framing must be into studs.

Significant water damage has occurred in stucco walls due to improper provisions for drainage and drying behind the lath and plaster. The minimum drainage space created by the furring requirements specified in C 1063 and included in this proposal allows for some drying of moisture which gets into the wall assembly, however if sufficient amounts of moisture accumulate, especially around penetrations and rough openings, it may be able to wick through the traditional 10-minute layers of Grade D paper. The larger drainage space associated with brick or natural-cut stone veneer would be necessary. Thus, the current exception for one layer of minimum 60-minute Grade D paper or equivalent, plus an additional non-absorbent layer (frequently an additional layer of 10-minute Grade D paper) or "designed" drainage space (using drainage mat, drainage board or other products) is elevated to the base practice. The existing requirement for 2 layers of 10-minute Grade D paper is retained as an exception for the dry climate zones.

Inconsistencies in Table R702.1(3) were also noted. For a first coat of masonry cement plaster, the "1" should appear under the Masonry Cement column, not the Lime column. The proportions of lime for a Portland cement finish coat are also revised to align with Table 3 of ASTM C926.

Significant water damage has occurred in stucco walls due to improper provision for drainage and drying behind the lath and plaster. A physical air space separation between the layers needs to be provided similar to the air space provided behind brick or natural cut stone veneers. Proper selection of a water-resistive barrier is also critical to good performance of a stucco wall assembly. The current exception for one layer of minimum 60-minute Grade D paper or equivalent is a good recommended practice and is elevated here to the base requirement. In wetter climates the possibility exists for bulk moisture to be present for extended periods of time between the layers, thus a requirement for an additional layer of 10-minute Grade D paper or equivalent is added.

Inconsistencies in Table R702.1(3) were also noted. For a first coat of masonry cement plaster, the "1" should appear under the Masonry Cement column, not the Lime column. The proportions of lime for a Portland cement finish coat are also revised to align with Table 3 of ASTM C926.

This proposal is submitted by the ICC Building Code Action Committee (BCAC). BCAC was established by the ICC Board of Directors to pursue opportunities to improve and enhance assigned International Codes or portions thereof. In 2014 and 2015 the BCAC has held 5 open meetings. In addition, there were numerous Working Group meetings and conference calls for the current code development cycle, which included members of the committee as well as any interested party to discuss and debate the proposed changes. Related documentation and reports are posted on the
BCAC website at: **BCAC** (http://www.iccsafe.org/codes-tech-support/codes/code-development-process/building-code-action-committee-bcac/)

Cost Impact: Will increase the cost of construction
Depending on the products selected to meet the water-resistant barrier requirements, the cost to provide a single 60-minute layer may be greater than the cost to provide two separate 10-minute layers. In warm-humid climates, the requirement for an additional 10-minute layer over the 60-minute layer would be an increase in cost if not already being provided as the "substantially non-water absorbing layer".

RB295-16 :
TABLE R703.7-
KULIK11697

Public Hearing Results

Committee Action: **Approved as Modified**

Modification:

R703.7.1 Lath. Lath and lath attachments shall be of corrosion-resistant materials in accordance with ASTM C 1063. Expanded metal, welded wire or woven wire lath shall be attached into wood framing members with $1^{1}/_{2}$-inch-long (38 mm), 11 gage nails having a $^{7}/_{16}$-inch (11.1 mm) head, or $^{7}/_{8}$-inch-long (22.2 mm), 16 gage staples, spaced not more than 7 inches (178 mm) on center vertically and not more than 24 inches on center horizontally, or as otherwise approved. Fastening in the field shall be permitted. Lath attachments to cold-formed steel framing or to masonry, stone, or concrete substrates shall be in accordance with ASTM C 1063

R703.7.3 Water-resistive barriers. Water-resistive barriers shall be installed as required in Section R703.2 and, where applied over wood-based sheathing, shall have a water resistance equal to or greater than that of 60-minute Grade D paper and be separated from the stucco a minimum distance of 3/8" by an intervening, substantially non water-absorbing layer or designed drainage space.

- **Exception:** In dry climate zones, the water-resistive barrier shall be vapor permeable and ~~shll~~ shall have a performance at least equivalent to two layers of 10-minute Grade D paper. The individual layers shall be installed independently such that each layer provides a separate continuous plane and any flashing (installed in accordance with Section R703.4) intended to drain to the water-resistive barrer is directed between the layers.

R703.7.3.1 Furring. Furring between lath and vertical supports or solid sheating shall consist of wood furring strips not less than 1 inch by 2 inches (25 mm by 51 mm) in nominal dimension, minimum ¾" metal channels, or ~~self-furring lath~~ approved material manufactured to provide a minimum ~~1~~ 3/~~4~~ 8 inch space between the lath and the vertical ~~suppor~~ support or the sheathing. Furring shall be spaced a maximum of 24 inches on center horizontally and, where installed over wood or cold-formed steel framing, shall be fastened into framing members.

Committee Reason: This proposal provides a solution , as stated in the proponents published reason, to the area of significant problems as regards exterior lath and plaster. The modification allows fastening in the field and increases the separation distance of wood-based sheating from the stucco to 3/8 inch.

Assembly Motion: **Disapprove**
Online Vote Results: **Failed**
Support: 23.22% (49) Oppose: 76.78% (162)
Assembly Action: **None**

Online Floor Modification:

Individual Consideration Agenda

Public Comment 1:

Proponent : Jay Crandell, P.E., ARES Consulting, representing Foam Sheathing Committee of the American Chemistry Council (jcrandell@aresconsulting.biz); Edward Kulik, representing Building Code Action Committee (bcac@iccsafe.org) requests Approve as Modified by this Public Comment.

Further Modify as Follows:

2015 International Residential Code

R703.7.3 Water-resistive barriers. Water-resistive barriers shall be installed as required in Section R703.2 and, where applied over wood-based sheathing, shall have a water resistance equal to or greater than that of 60-minute Grade D paper and be separated from the stucco a minimum distance of $^{3}/_{8}$" by an intervening, substantially non water-absorbing layer or designed drainage space.

> **Exception:** In dry climate zones, the water-resistive barrier shall~~ be vapor permeable and shll~~ have a performance at least equivalent to two layers of 10-minute Grade D paper. The individual layers shall be installed independently such that each layer provides a separate continuous plane and any flashing (installed in accordance with Section R703.4) intended to drain to the water-resistive barrer is directed between the layers.

Commenter's Reason:

CRANDELL: It is recognized that RB295 makes a number of improvements to stucco provisions. However, a modification to make an important correction was attempted from the floor and also by the committee at the hearing and was not accepted by the chair for consideration. This public comment makes the necessary correction to prevent an exclusionary application of vapor permeable water-resistive barriers in dry climates, disallowing use of many other WRB materials that have worked well in commercial and residential construction. The concern in dry climates is not with the vapor permeance of the WRB but with the stucco mix design and curing practice for stucco when applied in dry climate conditions (over any permeability of substrate). Industry guidelines address these "dry climate" concerns and none of them indicate that exclusionary use of a vapor permeable WRB is necessary or appropriate. In fact, use of a vapor permeable WRB may add to the problem by increasing the loss of stucco hydration water during the curing of stucco, causing it to weaken. The exception statement needs to be corrected to remove this unjustified and exclusionary WRB spec.

KULIK: The purpose of this public comment is to remove the requirement that the 2 layers of 10-min grade D paper be vapor permeable. Concerns were raised at the Committee Action Hearings that this requirement may be contrary to good building science practice. In particular, if a dwelling is constructed in a warm or hot climate (even a dry one) and rainfall does occur, the resulting inward moisture drive could overpower a vapor-permeable material and infiltrate into the wall assembly.

This public comment is submitted by the ICC Building Code Action Committee (BCAC). BCAC was established by the ICC Board of Directors to pursue opportunities to improve and enhance assigned International Codes or portions thereof. Between 2014 and 2016 the BCAC has held 8 open meetings. In addition, there were numerous Working Group meetings and conference calls for the current code development cycle, which included members of the committee as well as any interested party to discuss and debate the proposed public comments. Related documentation and reports are posted on the BCAC website at: BCAC (http://www.iccsafe.org/codes-tech-support/codes/code-development-process/building-code-action-committee-bcac/)

Public Comment 2:

Proponent : Jay Crandell, P.E., ARES Consulting, representing Foam Sheathing Committee of the American Chemistry Council (jcrandell@aresconsulting.biz) requests Approve as Modified by this Public Comment.

Further Modify as Follows:

2015 International Residential Code

R703.7.3 Water-resistive barriers. Water-resistive barriers shall be installed as required in Section R703.2 and, where applied over wood-based sheathing, shall have a water resistance equal to or greater than that of 60-minute Grade D paper and be separated from the stucco a minimum distance of $^{3}/_{8}$" by an intervening, substantially non water-absorbing layer or designed drainage space

~~**Exception:**~~ **Exceptions:**

1. In dry climate zones, the water-resistive barrier shall be vapor permeable and shll have a performance at least equivalent to two layers of 10-minute Grade D paper. The individual layers shall be installed independently such that each layer provides a separate continuous plane and any flashing (installed in accordance with Section R703.4) intended to drain to the water-resistive barrer is directed between the layers.

2. A water-resistive barrier complying with Section R703.2 that has a maximum water vapor permeance of 10 perms and which is separated from the stucco by an intervening layer of 10-minute Grade D paper or other substantially non-water absorbing layer shall be permitted. Any flashing (installed in accordance with Section R703.4) intended to drain to the water-resistive barrier shall be directed between the layers.

Commenter's Reason: While many improvements to stucco provisions are made in RB295, the changes made by RB295 to Section R703.7.3 are not complete and inadvertently remove an accepted and successful practice. Section R703.7.3 as revised by RB295 requires that a drainage space always be provided by stucco when a single layer of 60-min Grade D paper is used. This is appropriate for 60-min Grade D paper for improved moisture management performance, but is not universally appropriate or necessary for all alternatives to 60-min Grade D paper. Also, RB295 provides an exception for two layers of 10-min Grade D paper in dry climates, but this too is not universally appropriate for all alternatives to this stucco WRB method. Therefore, this PC adds an exception statement to recognize an accepted and successful WRB practice for managing moisture in conventional stucco walls. This builds on and does not detract from the improvements made in RB295 and is needed to avoid the inadvertent exclusion of what has been an accepted and succesful practice.

Public Comment 3:

Proponent : Jay Crandell, P.E., ARES Consulting, representing Foam Sheathing Committee of the American Chemistry Council (jcrandell@aresconsulting.biz) requests Approve as Modified by this Public Comment.

Further Modify as Follows:

2015 International Residential Code

R703.7.3.1 Furring. Furring between lath and vertical supports or solid sheating shall consist of wood furring strips not less than 1 inch by 2 inches (25 mm by 51 mm) in nominal dimension, minimum ¾" metal channels, or approved material manufactured to provide a minimum $^{3}/_{8}$ inch space between the lath and the vertical support or the sheathing. Furring shall be spaced a maximum of 24 inches on center horizontally and, where installed over wood or cold-formed steel framing, shall be fastened into framing members. Where installed over foam sheathing, furring connections shall comply with Sections R703.15, R703.16, or R703.17.

Commenter's Reason: This PC adds a needed reference for furring attachment requirements when furring is installed over foam sheathing and supports the weight of stucco cladding.

Public Comment 4:

Proponent : Edward Kulik, representing Building Code Action Committee (bcac@iccsafe.org) requests Approve as Modified by this Public Comment.

Further Modify as Follows:

2015 International Residential Code

R703.7.1 Lath. Lath and lath attachments shall be of corrosion-resistant materials in accordance with ASTM C 1063. Expanded metal, welded wire or woven wire lath shall be attached into wood framing members with $1^{1}/_{2}$-inch-long (38 mm), 11 gage nails having a $^{7}/_{16}$-inch (11.1 mm) head, or $^{7}/_{8}$-inch-long (22.2 mm), 16 gage staples, spaced not more than 7 inches (178 mm) on center vertically and not more than 24 inches on center horizontally, or as otherwise approved. ~~Fastening in the field~~ Additional fastening between wood framing members shall be permitted. Lath attachments to cold-formed steel framing or to masonry, stone, or concrete substrates shall be in accordance with ASTM C 1063

Commenter's Reason: The purpose of this public comment is to clarify the intent of the floor modification approved at the Committee Action Hearings. The BCAC realized the added language allowing fasteners "in the field" was unclear. The intent is to permit a limited number of fasteners between framing members (i.e. directly to sheathing) for the purposes of tacking up sections of lath during installation and to prevent an entire installation from being disapproved at inspection because a handful of fasteners missed the stud.
This public comment is submitted by the ICC Building Code Action Committee (BCAC). BCAC was established by the ICC Board of Directors to pursue opportunities to improve and enhance assigned International Codes or portions thereof. Between 2014 and 2016 the BCAC has held 8 open meetings. In addition, there were numerous Working Group meetings and conference calls for the current code development cycle, which included members of the committee as well as any interested party to discuss and debate the proposed public comments. Related documentation and reports are posted on the BCAC website at: BCAC (http://www.iccsafe.org/codes-tech-support/codes/code-development-process/building-code-action-committee-bcac/)

Public Comment 5:

Proponent : John Woestman, representing Kellen Company, representing Extruded Polystyrene Foam Association (XPSA) (jwoestman@kellencompany.com) requests Approve as Modified by this Public Comment.

Modify as Follows:

2015 International Residential Code

R703.7.3 Water-resistive barriers. Water-resistive barriers shall be installed as required in Section R703.2 and, where applied over wood-based sheathing, shall have a water resistance equal to or greater than that of 60-minute Grade D paper and be separated from the stucco a minimum distance of $^{3}/_{8}$" by an intervening, substantially non water-absorbing layer or designed drainage space.

- **~~Exception~~Exceptions:**

  1. In dry climate zones, the water-resistive barrier shall be vapor permeable and shll have a performance at least equivalent to two layers of 10-minute Grade D paper. The individual layers shall be installed independently such that each layer provides a separate continuous plane and any flashing (installed in accordance with Section R703.4) intended to drain to the water-resistive barrer is directed between the layers.
  2. Foam sheathing complying with ASTM C578 or ASTM C1289 installed as a water resistive barrier in accordance with the manufacturer's approved installation instructions shall be permitted where separated from the stucco by an intervening layer of 10-minute Grade D paper or other substantially non-water absorbing layer. Any flashing (installed in accordance with Section R703.4) intended to drain to the water-resistive barrier shall be directed between the layers.

Commenter's Reason: The changes made by RB295 to Section R703.7 are appropriate for water-resistive barriers like Grade D paper which have a high water vapor permeance such that drainage is important to prevent inward water vapor movement from stored moisture. However, these changes are not necessary for a material like foam sheathing when used as a WRB which protects underlying framing materials from inward water vapor movement. Foam sheathing materials complying with ASTM C578 and C1289 all have a maximum water vapor permeance below 10 perms and this is known to protect against inward moisture movement. In this case, the size of the drainage space becomes less important for successful performance although proper flashing is always important for all types and sizes of drainage spaces. To maintain this successful practice (which RB295 unnecessarily excludes as an option that is currently permitted in the code), this PC adds an exception statement with appropriate requirements.

RB295-16

RB298-16
IRC: R703.7.3.

Proposed Change as Submitted

Proponent : Jay Crandell, P.E., ARES Consulting, representing Foam Sheathing Committee of the American Chemistry Council

2015 International Residential Code

Revise as follows:

R703.7.3 Water-resistive barriers. Water-resistive barriers shall be installed as required in Section R703.2 and, where applied over wood-based sheathing, shall ~~include a water-resistive vapor-permeable~~ comply with Section R703.7.3.1.

R703.7.3.1 Application over wood-based sheathing. Water-resistive barrier applications over wood-based sheathing shall comply with ~~a performance at least equivalent to two~~ one of the following materials and methods:

1. Two layers of Grade D paper~~. The individual layers shall be~~ installed independently such that each layer provides a separate continuous plane in accordance with Section R703.2 and any flashing (installed in accordance with Section R703.4) intended to drain to the water-resistive barrier is directed between the layers.

- ~~**Exception:** Where the water-resistive barrier that is applied over wood-based sheathing has a water resistance equal to or greater than that of 60-minute Grade D paper and is separated from the stucco by an intervening, substantially nonwater-absorbing layer or designed drainage space.~~

2. One layer of 60-minute Grade D paper installed in accordance with Section 1404.2 and separated from the stucco by an intervening, substantially non-water-absorbing layer or drainage space with any flashing (installed in accordance with Section R703.4) intended to drain to the water-resistive barrier directed between the layers or into the drainage space.

3. One layer of an approved water-resistive barrier material installed in accordance with the manufacturer's installation instructions with a water resistance equal to or greater than that of 60-minute Grade D paper. The approved water-resistive barrier material shall be separated from the stucco by an intervening, substantially nonwater-absorbing layer or designed drainage space with any flashing (installed in accordance with Section R703.4) intended to drain to the water-resistive barrier directed between the layers or into the drainage space.

Reason: This proposal improves enforceability and clarity of this section of code by clarifying general requirements (Section R703.7.3) and transparently distinguishing the three options for application with wood based sheathing (new Section R703.7.3.1). More importantly, the building science intent of the code is improved by removing an exclusionary and problematic specification of a "vapor permeable" water-resistive barrier (WRB). The exclusive specification of "vapor permeable" conflicts with the ability to use a vapor permeable or non-vapor permeable WRB when they are properly coordinated with the vapor retarder provisions in Section R702.7. For example, in warm/humid climates it is actually preferable to have a lower vapor permeance (non-vapor permeable) WRB on the exterior behind the stucco to mitigate excessive inward vapor drives and moisture movement. In cold climates, it also is possible to apply provisions of Section R702.7.1 (Class III vapor retarder) or Section R702.7 (Class I or II vapor retarder) with an appropriate amount of exterior continuous insulation to allow the use of a lower vapor permeance (non-vapor permeable) WRB. Thus, the code appropriately permits the use of vapor permeable and non-vapor permeable WRB materials when properly coordinated with the use of vapor retarders in Section R702.7.

Cost Impact: Will not increase the cost of construction
The proposal is primarily a clarification and provides more options for WRB specification without increasing cost.

RB298-16 :
R703.7.3-
CRANDELL12752

Public Hearing Results

Committee Action: **Disapproved**

Committee Reason: The committee disapproved this proposal based on the proponents request and to be consistent with the prior action on RB295-16.

Assembly Action: **None**

Individual Consideration Agenda

Proponent : Jay Crandell, P.E., ARES Consulting, representing Foam Sheathing Committee of the American Chemistry Council (jcrandell@aresconsulting.biz) requests Approve as Submitted.

Commenter's Reason: The RB298 proposal was disapproved based on request of the proponent and action on RB295. However, several problems with Section R703.7.3 in RB295 have been identified since that time. This RB298 proposal provides clarification to Section R703.7.1 and also avoids the exclusionary and inappropriate WRB application and other concerns in RB 295 that are proposed for correction in separate public comments by this proponent. If those public comments on RB295 are approved, then this public comment may not be necessary and RB298 can remain disapproved without harm. However, if RB295 is not corrected, this proposal is compatible with RB295 and provides a needed alternative to changes made by RB295 in Section R703.7.3.

RB298-16

RB299-16
IRC: R703.7.3.

Proposed Change as Submitted

Proponent : Jay Crandell, P.E., ARES Consulting, representing Foam Sheathing Committee of the American Chemistry Council

2015 International Residential Code

Revise as follows:

R703.7.3 Water-resistive barriers. Water-resistive barriers shall be installed as required in Section R703.2 and, where applied over wood-based sheathing, shall include a water-resistive vapor-permeable barrier with a performance at least equivalent to two layers of Grade D paper. The individual layers shall be installed independently such that each layer provides a separate continuous plane and any flashing (installed in accordance with Section R703.4) intended to drain to the water-resistive barrier is directed between the layers.

Exceptions:

~~**Exception:**~~ 1. Where the water-resistive barrier that is applied over wood-based sheathing has a water resistance equal to or greater than that of 60-minute Grade D paper and is separated from the stucco by an intervening, substantially nonwater-absorbing layer or designed drainage space.

2. Where the water-resistive barrier is applied over vapor permeable or wood-based sheathing in Climate Zones 1A, 2A, 3A, 4A, 5A, and 4C in accordance with Section N1101.7, the water-resistive barrier material shall have a water vapor permeance of 10 perms or less in accordance with ASTM E96 (Method A) to minimize inward moisture movement. Alternatively, a ventilated air space shall be provided between the stucco and water-resistive barrier.

Reason: In many climates, having a vapor permeable WRB that is too vapor permeable (i.e., > 10 perms) can result in significant solar-driven inward moisture movement into and through exterior sheathing and farther into the wall assembly (e.g., to the interior vapor retarder or interior finishes), causing significantly increased risk of moisture damage or mold. This concern is particularly relevant to Section R703.7.3 which deals with conventional stucco -- a moisture storage ("reservoir") cladding. Consequently, a new exception #2 is provided to address this problem and is based on consistent findings and recommendations from several studies including Derome (2010), Wilkinson et al. (2007), BSC (2005), and Lepage and Lstiburek (2013). Key findings and recommendations from these studies also are summarized and applied in ABTG (2015). Finally, it is important to note that this proposal does NOT eliminate the use of WRB materials of greater than 10 perms in the stated application and climate zones because an alternative is provided to use a ventilated air space.

Bibliography: ABTG (2015). Assessment of Water Vapor Control Methods for Modern Insulated Light-Frame Wall Assemblies, Research Report No. ABTG-1410-03, Applied Building Technology Group, LLC, www.appliedbuildingtech.com/rr/1410-03

BSC (2005). Healthy and Affordable Housing: Practical Recommendations for Building, Renovating and Maintaining Housing, prepared for the U.S. Department of Housing and Urban Development and Building America Program of the U.S. Department of Energy, Building Science Corporation, www.buildingscience.com

Derome, D. (2010). The nature, significance and control of solar-driven water vapor diffusion in wall systems -- synthesis of Research Project RP-1235, ASHRAE Transactions, January 2010, www.ashrae.org

Lepage, R. and Lstiburek, J. (2013). Moisture Durability with Vapor-Permeable Insulating Sheathing, U.S. DOE, Building Technologies Office, www.osti.gov/bridge

Wilkinson, J., Ueno, K., DeRose, D., Straube, J.F., and Fugler, D. (2007). Understanding Vapour Permeance and Condensation in Wall Assemblies, 11th Canadian Conference on Building Science and Technology, Banff, Alberta, 2007.

Cost Impact: Will not increase the cost of construction
The proposal provides limitations on use that may affect some product choices under the specified conditions of use, but many material options of all types remain available and are unaffected by this proposal. In addition, provision for use of a ventilated air space would prevent any impact on WRB selection in the stated climate conditions.

RB299-16 :
R703.7.3-
CRANDELL12753

Public Hearing Results

Committee Action: **Disapproved**

Committee Reason: Based on the committees prior action on RB295-16. This would create a conflict.

Assembly Action: **None**

Individual Consideration Agenda

Public Comment 1:

Proponent : Jay Crandell, P.E., ARES Consulting, representing Foam Sheathing Committee of the American Chemistry Council (jcrandell@aresconsulting.biz) requests Approve as Modified by this Public Comment.

Modify as Follows:

2015 International Residential Code

R703.7.3 Water-resistive barriers. Water-resistive barriers shall be installed as required in Section R703.2 and, where applied over wood-based sheathing, shall include a water-resistive vapor-permeable barrier with a performance at least equivalent to two layers of Grade D paper. The individual layers shall be installed independently such that each layer provides a separate continuous plane and any flashing (installed in accordance with Section R703.4) intended to drain to the water-resistive barrier is directed between the layers.

- **Exceptions:**
-

1. Where the water-resistive barrier that is applied over wood-based sheathing has a water resistance equal to or greater than that of 60-minute Grade D paper and is separated from the stucco by an intervening, substantially nonwater-absorbing layer or designed drainage space.
2. Where the water-resistive barrier is applied over ~~vapor permeable or~~ wood-based sheathing in Climate Zones 1A, 2A, <u>or</u> 3A, ~~4A, 5A, and 4C in accordance with Section N1101.7, the water resistive barrier material shall have a water vapor permeance of 10 perms or less in accordance with ASTM E96 (Method A) to minimize inward moisture movement,. Alternatively,~~ a ventilated air space shall be provided between the stucco and water-resistive barrier.

Commenter's Reason: This public comment modifies RB299 to agree with a modification made to S302 by the structural committee in approving a similar proposal for the IBC. Thus, this public comment will coordinate improvements to the IBC with the IRC to address concerns with inward moisture movement in warm/moist climates. It also provides a means to correct problems with RB295 should they not be corrected by separate PC's provided for RB295. For information on the rationale and need for this proposal, refer to the reason statements for original proposals RB299 and S302.

RB299-16

RB300-16
IRC: R703.7.3.

Proposed Change as Submitted

Proponent : Laverne Dalgleish, Building Professionals, representing Building Professionals (ldalgleish@buildingprofessionals.com)

2015 International Residential Code

R703.7.3 Water-resistive barriers. Water-resistive barriers shall be installed as required in Section R703.2 and, where applied over wood-based sheathing, shall include a water-resistive vapor-permeable barrier with a performance at least equivalent to two layers of Grade D paper. The individual layers shall be installed independently such that each layer provides a separate continuous plane and any flashing (installed in accordance with Section R703.4) intended to drain to the water-resistive barrier is directed between the layers.

> **Exception:** Where the water-resistive barrier that is applied over wood-based sheathing has a water resistance equal to or greater than that of 60-minute Grade D paper and is separated from the stucco by an intervening, substantially nonwater-absorbing layer ~~or~~ , a designed drainage space or material complying with ASTM E2925.

Reference standards type: This reference standard is new to the ICC Code Books
Add new standard(s) as follows:
ASTM E2924 - 14 Standard Specification for Manufcactured Polymeric Drainage and Ventilation Materials used to Provide a Rainscreen Function

Reason: This allows another option for materials that meet a standard specification for materials that have been tested for allowing drainage and drying.

Cost Impact: Will not increase the cost of construction
This proposal simply add another option and as such does not add any cost to costruction

Analysis: A review of the standard(s) proposed for inclusion in the code,ASTM E 2925-14, with regard to the ICC criteria for referenced standards (Section 3.6 of CP#28) will be posted on the ICC website on or before April 1, 2016.

RB300-16 :
R703.7.3-
DALGLEISH13130

Public Hearing Results

Committee Action: **Disapproved**

Committee Reason: The committee disapproved this proposal based on the proponents request and prior action on RB278-16 and RB279-16.

Assembly Action: **None**

Individual Consideration Agenda

Public Comment 1:

Proponent : Laverne Dalgleish, Building Professionals, representing Building Professionals (ldalgleish@buildingprofessionals.com) requests Approve as Modified by this Public Comment.

Modify as Follows:

2015 International Residential Code

R703.7.3 Water-resistive barriers. Water-resistive barriers shall be installed as required in Section R703.2 and, where applied over wood-based sheathing, shall include a water-resistive vapor-permeable barrier with a performance at least equivalent to two layers of Grade D paper. The individual layers shall be installed independently such that each layer provides a separate continuous plane and any flashing (installed in accordance with Section R703.4) intended to drain to the water-resistive barrier is directed between the layers.

- **Exception:** Where the water-resistive barrier that is applied over wood-based sheathing has a water resistance equal to or greater than that of 60-minute Grade D paper and is separated from the stucco by an intervening, substantially nonwater-absorbing layer, a designed drainage space or material complying with ASTM E2925.

Reference standards type: This reference standard is new to the ICC Code Books

Add new standard(s) as follows:

Commenter's Reason: The concern raised at the Group B Hearings was that the standard referenced (ASTM E2925) listed specific requirements for both the substrate and the water resistive barrier in the construction of the test specimen. This standard is currently being modified to make the requirements generic both for the substrate and for the water resistive barrier. The ASTM E2925 standard originally stated;

"A1.2.1 Construct one 1200 mm by 2400 mm test wall assembly comprised of 50 mm by 100 mm (nominal) perimeter framing and 50 mm by 100 mm (nominal) framing vertically at 400 mm on center. Install a wood panel of 11 mm oriented strand board (OSB) to the framing and fasten with 10d fasteners at 200 mm on center. Install a water resistive barrier (WRB) complying with Specification E2556/E2556M on the OSB in a seamless, continuous manner."

This will now state;

"A.1.2.1 The test specimen shall be 1200 mm by 2400 mm constructed from 50 mm by 100 mm (nominal) framing for the perimeter framing with two vertically studs every 400 mm on center across the 1200 mm leg, have a typical substrate used in building construction installed on one side of the wood framing which is then covered with a water resistive barrier (WRB) that it is seamless and continuous."

With the modified requirements in the standard, any substrate and any water resistive barrier is acceptable to be used in constructing the specimen.

Analysis: The proposed modification to this code change proposal includes update of the year edition of standard ASTM E2925 from -14 to -16. CP28, Section 3.6.3.1 and newly referenced standard "shall be completed and readily available prior to the Public Comment Hearing based on the cycle of code development which includes the code change proposal." Therefore, the proponent is required to provide information verifying that the standard ASTM E2925-16 is completed and readily available at the time of the public comment hearings.

RB300-16

RB301-16
IRC: R703.7.3.

Proposed Change as Submitted

Proponent : Laverne Dalgleish, Building Professionals, representing Building Professionals (ldalgleish@buildingprofessionals.com)

2015 International Residential Code

R703.7.3 Water-resistive barriers. Water-resistive barriers shall be installed as required in Section R703.2 and, where applied over wood-based sheathing, shall include a water-resistive vapor-permeable barrier with a performance ~~at least equivalent~~ equal to ~~two layers~~ or greater than that of ~~Grade D paper~~ a *water-resistive barrier* complying with ASTM E2556, Type II. The individual layers shall be installed independently such that each layer provides a separate continuous plane and any flashing (installed in accordance with Section R703.4) intended to drain to the water-resistive barrier is directed between the layers.

Exception: Where the water-resistive barrier that is applied over wood-based sheathing has a water resistance equal to or greater than ~~that of 60-minute Grade D paper and is separated from the stucco by an intervening, substantially nonwater-absorbing layer or designed drainage space.~~ ;

a. material complying with ASTM E 2556 Type 1 and is separated from the stucco by an intervening, substantially nonwater-absorbing layer or designed drainage space or,

b. material complying with ASTM E2556 Type II and is seperated from stucco by a intervening material complying with ASTM E2925.

Reference standards type: This reference standard is new to the ICC Code Books
Add new standard(s) as follows:
ASTM E2925-14 Standard Specification for Manufactured Polymeric Drainage and Ventilation Materials used to Provide a Rainscreen Function

Reason: This proposal provides another option in meeting the existing requirments of the code and references standards for materials selection

Cost Impact: Will not increase the cost of construction
As this simply provides another option, there is no additional cost

Analysis: A review of the standard(s) proposed for inclusion in the code,ASTM E 2925-14, with regard to the ICC criteria for referenced standards (Section 3.6 of CP#28) will be posted on the ICC website on or before April 1, 2016.

RB301-16 :
R703.7.3-
DALGLEISH13137

Public Hearing Results

Committee Action: **Disapproved**

Committee Reason: The committee disapproved this proposal based on the proponents request and prior action on RB300-16 and RB295-16.

Assembly Action: **None**

Individual Consideration Agenda

Public Comment 1:

Proponent : Laverne Dalgleish, representing Building Professionals (ldalgleish@buildingprofessionals.com) requests Approve as Modified by this Public Comment.

Modify as Follows:

2015 International Residential Code

R703.7.3 Water-resistive barriers. Water-resistive barriers shall be installed as required in Section R703.2 and, where applied over wood-based sheathing, shall include a water-resistive vapor-permeable barrier with a performance equal to or greater than that of a *water-resistive barrier* complying with ASTM E2556, Type II. The individual layers shall be installed independently such that each layer provides a separate continuous plane and any flashing (installed in accordance with Section R703.4) intended to drain to the water-resistive barrier is directed between the layers.

~~**Exception:** Where the water-resistive barrier that is applied over wood-based sheathing has a water resistance equal to or greater than;~~

~~a. material complying with ASTM E 2556 Type 1 and is separated from the stucco by an intervening, substantially nonwater-absorbing layer or designed drainage space or,~~

~~b. material complying with ASTM E2556 Type II and is seperated from stucco by a intervening material complying with ASTM E2925.~~

Exception: Where the water-resistive barrier that is applied over wood-based sheathing has a water resistance equal to or greater than that of 60-minuit Grade D paper and is separated from stucco by an intervening substantially non-water-absorbing layer, a designated drainage space or material complying to ASTM E2925.

Reference standards type: This reference standard is new to the ICC Code Books
Add new standard(s) as follows:

Commenter's Reason: The concern raised at the Group B Hearings was that the standard referenced (ASTM E2925) listed specific requirements for both the substrate and the water resistive barrier in the construction of the test specimen. This standard is currently being modified to make the requirements generic both for the substrate and for the water resistive barrier. The ASTM E2925 standard originally stated;

"A1.2.1 Construct one 1200 mm by 2400 mm test wall assembly comprised of 50 mm by 100 mm (nominal) perimeter framing and 50 mm by 100 mm (nominal) framing vertically at 400 mm on center. Install a wood panel of 11 mm oriented strand board (OSB) to the framing and fasten with 10d fasteners at 200 mm on center. Install a water resistive barrier (WRB) complying with Specification E2556/E2556M on the OSB in a seamless, continuous manner."

This section will now state;

"A.1.2.1 The test specimen shall be 1200 mm by 2400 mm constructed from 50 mm by 100 mm (nominal) framing for the perimeter framing with two vertically studs every 400 mm on center across the 1200 mm leg, have a typical substrate used in building construction installed on one side of the wood framing which is then covered with a water resistive barrier (WRB) that it is seamless and continuous."

With the modified requirements in the standard, any substrate and any water resistive barrier is acceptable to be used in constructing the specimen.

Analysis: The proposed modification to this code change proposal includes update of the year edition of standard ASTM E2925 from -14 to -16. CP28, Section 3.6.3.1 and newly referenced standard "shall be completed and readily available prior to the Public Comment Hearing based on the cycle of code development which includes the code change proposal." Therefore, the proponent is required to provide information verifying that the standard ASTM E2925-16 is completed and readily available at the time of the public comment hearings.

RB301-16

RB302-16
IRC: R703.7.3.

Proposed Change as Submitted

Proponent : Theresa Weston, representing DuPont Building Innovations (theresa.a.weston@dupont.com)

2015 International Residential Code

R703.7.3 Water-resistive barriers. Water-resistive barriers shall be installed as required in Section R703.2 and, where applied over wood-based sheathing, shall include a water-resistive vapor-permeable barrier with a performance at least equivalent to two layers of Grade D paper, complying with ASTM E2556, Type I. The individual layers shall be installed independently such that each layer provides a separate continuous plane and any flashing (installed in accordance with Section R703.4) intended to drain to the water-resistive barrier is directed between the layers.

Exception: Where the water-resistive barrier that is applied over wood-based sheathing has a water resistance equal to or greater than that of 60-minute Grade D paper, complying with ASTM E2556, Type II and is separated from the stucco by an intervening, substantially nonwater-absorbing layer or designed drainage space.

Reference standards type: This is an update to reference standard(s) already in the ICC Code Books
Add new standard(s) as follows:
ASTM E2556-10 Standard Specification for Vapor Permeable Flexible Sheet Water-Resistive Barriers intended for Mechanical Attachment

Reason: This proposal adds a reference standard specification to the Grade D Paper requirements, which are currently unspecified. Not only will this better define the existing requirements for Grade D Paper it will also provide more consistency between the codes, as IBC Section 2510.6 on stucco water-resistive barriers references ASTM E2556.

Cost Impact: Will not increase the cost of construction
This code does not change the requirements, only improves their definition.

RB302-16 :
R703.7.3-
WESTON13022

Public Hearing Results

Committee Action: **Approved as Submitted**

Committee Reason: This proposal maintains the prescriptive minimum while adding a standard for product compliance.

Assembly Action: **None**

Individual Consideration Agenda

Proponent : Jay Crandell, P.E., ARES Consulting, representing Foam Sheathing Committee of the American Chemistry Council (jcrandell@aresconsulting.biz) requests Disapprove.

Commenter's Reason: This public comment requests disapproval for the same reason that similar proposals S304 and S305 were disapproved by the structural committee for the IBC. The ASTM E 2556 standard does not provide for equivalency of other WRB materials to Grade D paper. It has no upper limit on water vapor permeance consistent with Grade D paper and, thus, creates problems with inward moisture movement for materials that have higher permeance than Grade D paper (see reason statement with proposal RB299). ASTM E 2556 also includes no requirement for equivalency of installed water-resistance of substitutes or alternatives to Grade D paper. Several studies (see reason statement with proposal RB 286) have shown this to be a problem in assuring equivalency of other approved water-resistive barrier materials and this is particularly important in stucco applications. A similar proposal was denied at the last code development cycle for these same reasons and nothing has been done to make the necessary corrections.

Proponent : Danko Davidovic, representing Huber Engineered Woods LLC (danko.davidovic@huber.com) requests Disapprove.

Commenter's Reason: If this proposed amendment is approved, the performance characteristics of WRBs (regardless of the product type and manufacturing technology) will be governed by performance requirements for one specific type of product (flexible sheet mechanically attached WRBs). Considering the great variety of manufacturing technologies currently available

for WRBs, and possible development of promising future technologies, the current proposal may limit innovation in this arena. We propose further development of codes and standards that will result in more universal code language and not rely on specific product technology to define product performance requirements.

In addition, the original rationale of proponent to better define performance requirements of the Grade D papers by referencing to ASTM E2256 standard specification does not necessarily provide better definition of performance properties. For instance, specifying WRBs performance properties with regards to water vapor transmission characteristics using ASTM E96 desiccant method test results as required by ASTM E2556 appears to be obsolete and does not reflect the current building science knowledge about WRBs conditions in service. This requirement has been in place because of the materials historically used as WRB's including #15 felt and asphalt impregnated building paper. Under most circumstances and in most wall assemblies constructed in North America, the WRBs will be located directly beneath the cladding and most likely exhibit conditions very similar to outdoor ambient. Weather historic data for most North America locations reveal the monthly average relative humidity levels in 50-90 percent range. ASTM E96 Method B (Water Method) is the more appropriate performance requirement and better represents WRB in service conditions.

In general, we agree with intent to improve the code language to provide better specifications of performance characteristic of WRBs in service, however, we currently do not see proposed ASTM E2556 as an adequate alternative based on lack of technical accuracy and mismatch with the current building science knowledge. In addition, proposed change does not provide fair competitiveness among WRB products existing in the market today and may impact negatively new products developed by emerging technologies.

Danko Davidovic, Ph.D., P.E. (GA)
Building Science Manager
Huber Engineered Woods LLC

Proponent : Joseph Lstiburek (joe@buildingscience.com) requests Disapprove.

Commenter's Reason: ASTM E2556 does not recognize the greater importance of the water method (wet cup) in wall assembly performance as compared to the desiccant method (dry cup). ASTM E2556 only lists the desiccant method in its Table 1 Requirements for Water Resistive Barriers. The current proposed language significantly limits the use of demonstrated alternative methods of water vapor transmission such as liquid applied water-resistive barriers, fully adhered sheet membranes and overlays and coatings applied directly to wood-based sheathings.

RB302-16

RB303-16

IRC: R703.8.4, R703.8.4(2) (New).

Proposed Change as Submitted

Proponent : Edward Keith, representing APA- The Engineered Wood Association (ed.keith@apawood.org)

2015 International Residential Code

Revise as follows:

R703.8.4 Anchorage. Masonry veneer shall be anchored to the supporting wall studs with corrosion-resistant metal ties embedded in mortar or grout and extending into the veneer a minimum of $1^1/_2$ inches (38 mm), with not less than $^5/_8$-inch (15.9 mm) mortar or grout cover to outside face. Masonry veneer tie attachment and air space requirements shall conform to Table ~~R703.8.4~~ R703.8.4(1). For brick tie attachment recommendations when brick ties are attached to wood structural panel sheathing only, see Table R703.8.4(2).

TABLE R703.8.4(2)

BRICK TIE MINIMIM FASTENING REQUIREMENTS (VERTICAL TIE SPACING/ HORIZONTAL TIE SPACING) FOR DIRECT APPLICATION OVER UP TO TWO INCHES OF FOAM TO MINIMUM 7/16 PERFORMANCE CATEGORY WOOD STRUCTURAL PANEL SHEATHING [a,b,c]

Fastener type[d]	Size (dia. or Screw #)	Minimum Required Brick-Tie Spacing (Vertical-Tie-Spacing/Horizontal-Tie-Spacing) (in./in.)					
		110 mph V_{ult}		130 mph V_{ult}		140 mph V_{ult}	
		Zone 5, Exposure C	Zone 5, Exposure D	Zone 5, Exposure C	Zone 5, Exposure D	Zone 5, Exposure C	Zone 5, Exposure D
Ring Shank	0.091	16/12, 12/16	12/12	12/12	--	--	--
	0.148	16/16	16/16	16/12, 12/16	16/12, 12/16	16/12, 12/16	12/12
Screws	#6	16/16	16/16	16/12, 12/16	16/12, 12/16	16/12, 12/16	12/12
	#8	24/16, 16/24	16/16	16/16	16/12, 12/16	16/12, 12/16	16/12, 12/16
	#10	24/16, 16/24	16/16	16/16	16/16	16/16	16/12, 12/16
	#14	24/16, 16/24	24/16, 16/24	24/16, 16/24	16/16	16/16	16/16

For SI: 1 inch = 25.4 mm, 1 mph = 0.447 m/s.

a. This table is based on attachment of brick ties directly to wood structural panel sheathing only. Additional attachment of the brick tie to lumber framing is not required.

b. Wood structural panels shall have a specific gravity of 0.42 or greater in accordance with NDS.

c. Foam sheathing shall have a minimum compressive strength of 15 psf in accordance with ASTM C578 of ASTM C1289.

d. Fasteners shall be sized such that the tip of the fastener passes completely through the wood structural panel sheathing by at least 1/4 inch.

—

Reason: The trend toward using more foam sheathing along with the use of advanced framing techniques in an effort to conserve energy has made it increasingly difficult to install wall cladding. Not only is the framing difficult to find under 2 inches of foam and building paper or house wrap, it may not even be present near corners and around openings because it may be completely masked by trim at corners and around windows.

The attachment of brick veneer brick-ties can similarly be a problem as the current attachment recommendations assume the brick ties are going to be nailed directly to those scarce framing members. The proposed table provided brick-tie attachment recommendations for attachment direct to a minimum 7/16 performance category wood structural panels. As the wood structural panel thickness does not permit the full use of the nail's shank, it is essential that either ring-shank nails or screws be used to keep the brick veneer in place. The above table provides this information. We think that while the use of ring shank fasteners will not be appropriate for every installation, the table provided is a tool that the mason may use if faced with the attachment of brick to a fully sheathed, energy efficient home.

We ask the Committee to favorably consider this table for inclusion into the list of similar tables recently provided for the use of the builder, providing guidance for the installation of siding products over foam sheathing.

Cost Impact: Will increase the cost of construction

The proposed change will increase the cost of construction. The increase will be due to the use of ring-shank nails or screws over the more traditional nailed connections. The increase in construction costs can be partially offset by the fact that the builder will not have to locate the studs behind the various materials covering the studs (sheathing, foam, building paper) when attaching the brick ties, as attachment to the studs will not be required. The proposed solution will also eliminate the need to provide extra wall framing just to facilitate the attachment of the brick ties. The use of extra framing adds cost as well as reduces the thermal efficiency of the system.

RB303-16 : R703.8.4-KEITH11956

Public Hearing Results

Committee Action: **Disapproved**

Committee Reason: The committee felt that Exposure B is needed and the cost impact should be quantified.

Assembly Action: **None**

Individual Consideration Agenda

Public Comment 1:

Proponent : Edward Keith, representing APA- The Engineered Wood Association (ed.keith@apawood.org); Borjen Yeh (borjen.yeh@apawood.org) requests Approve as Modified by this Public Comment.

Modify as Follows:

2015 International Residential Code

R703.8.4 Anchorage. Masonry veneer shall be anchored to the supporting wall studs with corrosion-resistant metal ties embedded in mortar or grout and extending into the veneer a minimum of $1^1/_2$ inches (38 mm), with not less than $^5/_8$-inch (15.9 mm) mortar or grout cover to outside face. Masonry veneer tie attachment and air space requirements shall conform to Table R703.8.4(1). ~~For brick~~ Masonry veneer tie attachment ~~recommendations when brick ties are attached~~ throughany insulating sheathing, a maximum of 2" in thickness to a minimum of 7/16 performance category wood structural panel sheathing only, see Table R703.8.4(2).

TABLE R703.8.4(2)

REQUIRED BRICK TIE ~~MINIMIM FASTENING REQUIREMENTS (VERTICAL TIE~~ SPACING~~/ HORIZONTAL TIE SPACING)~~ FOR DIRECT APPLICATION ~~OVER UP TO TWO INCHES OF FOAM TO MINIMUM 7/16 PERFORMANCE CATEGORY~~ WOOD STRUCTURAL PANEL SHEATHING [a,b,c]

Fastener type[d]	Size (dia. or Screw #)	Required Brick-Tie Spacing (Vertical-Tie Spacing/Horizontal-Tie Spacing) (in./in.)											
		110 mph V Ultimate			115 mph V Ultimate			130 mph V Ultimate			140 mph V Ultimate		
		Zone 5, Exposure B	Zone 5, Exposure C	Zone 5, Exposure D	Zone 5, Exposure B	Zone 5, Exposure C	Zone 5, Exposure D	Zone 5, Exposure B	Zone 5, Exposure C	Zone 5, Exposure D	Zone 5, Exposure B	Zone 5, Exposure C	Zone 5, Exposure D
Ring Shank Nails	0.091	16/16, 16/12, 12/16, 12/12	16/12, 12/16, 12/12	12x12	16/16, 16/12, 12/16, 12/12	16/12, 12/16, 12/12	12x12	16/12, 12/16, 12/12	12x12	--	12x12	--	--
	0.148	24/16, 16/24, 16/16, 16/12, 12/16, 12/12	16/16, 16/12, 12/16, 12/12	16/16, 16/12, 12/16, 12/12	24/16, 16/24, 16/16, 16/12, 12/16, 12/12	16/16, 16/12, 12/16, 12/12	16/16, 16/12, 12/16, 12/12	16/16, 16/12, 12/16, 12/12	16/12, 12/16, 12/12	16/12, 12/16, 12/12	16/16, 16/12, 12/16, 12/12	16/12, 12/16, 12/12	12x12

Screws	#6	24/16, 16/24, 16/16, 16/12, 12/16, 12/12	16/16, 16/12, 12/16, 12/12	16/16, 16/12, 12/16, 12/12	24/16, 16/24, 16/16, 16/12, 12/16, 12/12	16/16, 16/12, 12/16, 12/12	16/16, 16/12, 12/16, 12/12	16/16, 16/12, 12/16, 12/12	16/12, 12/16, 12/12	16/12, 12/16, 12/12	16/16, 16/12, 12/16, 12/12	16/12, 12/16, 12/12	12x12
	#8	24/16, 16/24, 16/16, 16/12, 12/16, 12/12	24/16, 16/24, 16/16, 16/12, 12/16, 12/12	16/16, 16/12, 12/16, 12/12	24/16, 16/24, 16/16, 16/12, 12/16, 12/12	16/16, 16/12, 12/16, 12/12	16/16, 16/12, 12/16, 12/12	24/16, 16/24, 16/16, 16/12, 12/16, 12/12	16/16, 16/12, 12/16, 12/12	16/12, 12/16, 12/12	16/16, 16/12, 12/16, 12/12	16/12, 12/16, 12/12	16/12, 12/16, 12/12
	#10	24/16, 16/24, 16/16, 16/12, 12/16, 12/12	24/16, 16/24, 16/16, 16/12, 12/16, 12/12	24/16, 16/24, 16/16, 16/12, 12/16, 12/12	24/16, 16/24, 16/16, 16/12, 12/16, 12/12	24/16, 16/24, 16/16, 16/12, 12/16, 12/12	16/16, 16/12, 12/16, 12/12	24/16, 16/24, 16/16, 16/12, 12/16, 12/12	16/16, 16/12, 12/16, 12/12	16/16, 16/12, 12/16, 12/12	24/16, 16/24, 16/16, 16/12, 12/16, 12/12	16/16, 16/12, 12/16, 12/12	16/12, 12/16, 12/12
	#14	24/16, 16/24, 16/16, 16/12, 12/16, 12/12	24/16, 16/24, 16/16, 16/12, 12/16, 12/12	24/16, 16/24, 16/16, 16/12, 12/16, 12/12	24/16, 16/24, 16/16, 16/12, 12/16, 12/12	24/16, 16/24, 16/16, 16/12, 12/16, 12/12	24/16, 16/24, 16/16, 16/12, 12/16, 12/12	24/16, 16/24, 16/16, 16/12, 12/16, 12/12	24/16, 16/24, 16/16, 16/12, 12/16, 12/12	16/16, 16/12, 12/16, 12/12	24/16, 16/24, 16/16, 16/12, 12/16, 12/12	16/16, 16/12, 12/16, 12/12	16/16, 16/12, 12/16, 12/12

For SI: 1 inch = 25.4 mm, 1 mph = 0.447 m/s.

a. This table is based on attachment of brick ties directly to wood structural panel sheathing only. Additional attachment of the brick tie to lumber framing is not required. The brick ties shall be permitted to be placed over any insulating sheathing, not to exceed 2" in thickness. Wood structural panel sheathing shall be a minimum 7/16 performance category. The table is based on a building height of 30 feet or less.

b. Wood structural panels shall have a specific gravity of 0.42 or greater in accordance with NDS.

c. Foam sheathing shall have a minimum compressive strength of 15 psf in accordance with ASTM C578 of ASTM C1289.

d. Fasteners shall be sized such that the tip of the fastener passes completely through the wood structural panel sheathing by at least 1/4 inch.

Commenter's Reason: Opponents at the last committee action hearing asked us to return with a table that included Exposure B. The above reflects this change. In addition, all of the normally permitted fastener spacings were placed in the appropriate cells. Column headings were changed slightly to ensure a more consistent interpretation of the table. In addition, the results for the common 115 mph were also added at the request of the NAHB.

The Brick Industry Association, the Foam Industry and the NAHB worked with us to modify this proposal and we ask you to please vote to overturn the Committee's recommendation and put this valuable information into the IRC.

A more robust cost impact statement, below, was requested by the committee.

COST IMPACT: The code change will slightly increase the cost of construction. While difficult to quantify, the cost increase will be due to the additional cost associated with the use of deformed shank nails or screws for the attachment of brick ties. the additional cost increase is offset by a number of factors that could easily offset the extra cost.

- The ease of construction as the siding contractor can apply the fasteners without having to worry about hitting a stud behind building paper, structural sheathing, and sometimes even insulating sheathing. This can greatly speed up the installation process. It is easy to use any attachment pattern when you don't have to worry about hitting ant framing hidden behind.
- With the use of advanced framing techniques, additional framing is often needed to provide for siding attachment, particularly at windows and doors. (the first attachment point at the end f the lap siding is especially difficult to accomplish as trim boards often cover up the framing, providing no nail base for the ends of the boards.) This additional framing is expensive, labor consuming, and reduces the effectiveness of the advanced .
- The reduced penetration into sheathing 3/8" to 7/16" vs. 1-1/4" to 1-1/2" will often permit the use of a shorter nail, especially when foam sheathing is used behind the siding. (E.g., plywood lap siding over 2 inches of foam sheathing would require the use of a 4" nail to get the required 1-1/2" penetration into the framing, but only a 3-1/2 inch fastener for attachment into sheathing.)
- The additional fasteners required to anchor the siding to wood structural sheathing provides the siding with additional attachment points thus better holding the siding and foam sheathing in place when exposed to high wind events, minimizing the loss of the siding products.

Based on Housewyse.com estimates, the increase in building costs is about $0.07 per square foot, which can be offset at least partially by those factors mentioned above. We ask you to overturn the Committee's recommendation and put this valuable table into the IRC.

Proponent : Scott Campbell, representing Portland Cement Association (scampbell@cement.org) requests Approve as Submitted.

Commenter's Reason: The proposed change allows attachment of brick veneer ties directly to a specific thickness and category of structural wood sheathing. Use of the proposed nailing table will eliminate the need to locate studs behind insulation. The use of screws or ring shanked nails will increase costs, but will be more than offset by the reduced labor of locating studs and assuring adequate attachment to studs. The net effect will depend on local relative labor and material costs and may be an increase or decrease, but the affect will be small in any case. This proposal encourages the use of more insulation, and also encourages the use of a more resilient exterior surface, with little if any cost increase. Further, attachment to sufficiently thick sheathing will assure improved attachment as compared to connectors that may miss or barely catch the edges of studs. We encourage approval of the proposed change.

RB303-16

RB304-16
IRC: R703.10.2.

Proposed Change as Submitted

Proponent : David Spencer, representing Washington Association of Building Officials Technical Code Development Committee

2015 International Residential Code

Revise as follows:

R703.10.2 Lap siding. Fiber-cement lap siding having a maximum width of 12 inches (305 mm) shall comply with the requirements of ASTM C 1186, Type A, minimum Grade II or ISO 8336, Category A, minimum Class 2. Lap siding shall be lapped a minimum of $1^1/_4$ inches (32 mm) and ~~lap siding not having tongue-and-groove end joints~~ shall ~~have~~ be installed in accordance with the ~~ends protected with caulking, covered with an H-section joint cover, located over a strip of flashing~~ manufacturer's installation instructions, or shall be designed to comply with Section R703.1. Lap siding courses shall be installed with the fastener heads exposed or concealed, in accordance with Table R703.3(1) or approved manufacturer's instructions.

Reason: Manufacturers of these products recommend the use of flashing strips, to be installed behind the product, at all field butt joints. Applying caulk to the butt joint is ineffective because the gap is not large enough to accommodate the sealant. Also, on prefinished products, caulk may leave an unsightly looking finish. Spreading or feathering the sealant into a thin film will create a noticeably different appearance, and it can remove the needed thickness required to withstand UV exposure and joint movement. In many instances if specific manufacturer-approved products are not used, it can void the warranty from the manufacturer.

Cost Impact: Will not increase the cost of construction
This code change will reduce the cost of construction as caulk would no longer be used for field butt joints. Caulk manufacturers and industry experts agree that the caulk in field butt joints and horizontal laps will need to be periodically removed and/or reapplied to maintain the seal over the life of the building. Ongoing maintenance of the field butt joint calking causes an unnecessary financial impact.

RB304-16 :
R703.10.2-
SPENCER11209

Public Hearing Results

Committee Action: **Disapproved**

Committee Reason: Protection of the joint with caulking is acceptable for field painted applications. The prescriptive language needs to remain in the code to aid enforcement.

Assembly Action: **None**

Individual Consideration Agenda

Proponent : David Spencer, representing Washington Association of Building Officials Technical Code Development Committee (dspencer@northbendwa.gov) requests Approve as Submitted.

Commenter's Reason: The current code requirements for fiber-cement lap siding don't align with manufacturers' installation instructions. Joint flashing/flashing strips, not caulking, are the recommended installation procedure at field butt joints by most manufacturers of fiber-cement siding. The installation of the joint flashing recomended by the manufacturers' is demonstrated in the attached figures. Some manufacturers forbid caulking their products; some recommend against using it; some only allow specific products.
There are many problems with the use of caulk. Applying caulk to the butt joint is ineffective because the gap is not large enough to accommodate the sealant. Most manufacturers of caulking do not allow tooling. Spreading or feathering the sealant into a thin film will create a noticeably different appearance, and can remove the thickness required to withstand UV exposure and joint movement. In many instances if specific manufacturer-approved products are not used, it will void the warranty of the manufacturer for fiber-cement siding.

The prescriptive language does not aid enforcement.

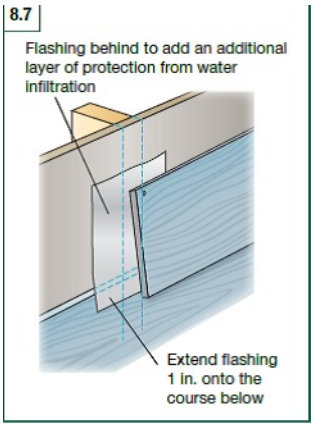

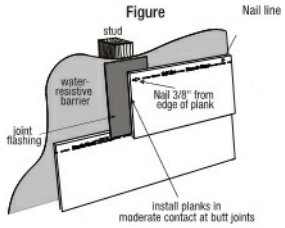

RB304-16

RB311-16
IRC: R802.1.5.

Proposed Change as Submitted

Proponent : Marcelo Hirschler, representing GBH International (gbhint@aol.com)

2015 International Residential Code

Revise as follows:

R802.1.5 Fire-retardant-treated wood. Fire-retardant-treated wood (FRTW) is any listed wood product that, when impregnated with chemicals by a pressure process or other means during manufacture, shall comply with one of the following: (1) It shall have, when tested in accordance with ASTM E 84 or UL 723, a listed flame spread index of 25 or less and ~~shows~~ show no evidence of significant progressive combustion ~~where~~ when the test is continued for an additional 20-minute period. In addition, the flame front shall not progress more than 10.5 feet (3200 mm) beyond the center line of the burners at any time during the test.
(2) It shall be listed to both comply with all of the requirements of ASTM E2768, and also show no evidence of significant progressive combustion during the 30 minute test, when tested on all sides with a ripped or cut longitudinal gap of 1/8 inch (3.2 mm).

Reference standards type: This is an update to reference standard(s) already in the ICC Code Books
Add new standard(s) as follows:
ASTM E2768 (2011) Standard Test Method for Extended Duration Surface Burning Characteristics of Building Materials (30 min Tunnel Test). ASTM E2768 is already in the IWUIC.

Reason: ASTM E2768 was developed specifically to represent an ASTM E84 test extended to 30 minutes and requiring a flame spread index of 25 or less and a flame front that does not progress more than 10.5 ft (3.2 m) beyond the centerline of the burners at any time during the 30 min test period.

There have been multiple discussions since ASTM E2768 was developed in 2011 at various code hearings as to whether the added requirement (no significant progressive combustion) is included or not in ASTM E2768. The wording of ASTM E2768 reads as follows: "13.1.2 The flame front shall not progress more than 10.5 ft
(3.2 m) beyond the centerline of the burners at any time during the 30 min test period. This is considered evidence of no significant progressive combustion in this test method." In order to recognize this test method the present proposal does not enter this debate but it requires that, for a wood product to be accepted as "fire-retardant-treated wood" it must also have been listed, beyond compliance to ASTM E2768, to demonstrate "no evidence of significant progressive combustion".

Furthermore, this proposal also requires that a product tested to ASTM E2768 must have been tested on all sides and must have been tested with a longitudinal gap of 1/8 inch. The intent of this requirement is to ensure that a product that is coated and not impregnated cannot be accepted as "fire-retardant-treated wood". The requirements in this proposal can clearly not be met by a wood product coated with a flame retardant, because the flame retardant needs to have been impregnated in order to have the good fire performance when exposed to flame through the gap, and tested on all sides.

The IWUIC has accepted requirements with language similar to this and it is time for the IBC to accept it too. The IWUIC language for ignition resistant building materials reads as follows (note that the section covers materials that are not made of wood also):
503.2 Ignition-resistant building material. Ignition-resistant building materials shall comply with any one of the following:
1. Material shall be tested on all sides with the extended ASTM E 84 (UL 723) test or ASTM E 2768, except panel products shall be permitted to test only the front
and back faces. Panel products shall be tested with a ripped or cut longitudinal gap of 1/8 inch (3.2 mm). Materials that, when tested in accordance with the test
procedures set forth in ASTM E 84 or UL 723 for a test period of 30 minutes, or with ASTM E 2768, comply with the following:
1.1. Flame spread. Material shall exhibit a flame spread index not exceeding 25 and shall not show evidence of progressive combustion following the extended 30-minute test.
1.2. Flame front. Material shall exhibit a flame front that does not progress more than 101/2 feet (3200 mm) beyond the centerline of the burner at any time during the extended 30-minute test.
1.3. Weathering. Ignition-resistant building materials shall maintain their performance in accordance with this section under conditions of use. Materials shall meet the performance requirements for weathering (including exposure to temperature, moisture and ultraviolet radiation) contained in the following standards, as applicable
to the materials and the conditions of use:
1.3.1. Method A "Test Method for Accelerated Weathering of Fire-Retardant-Treated Wood for Fire Testing" in ASTM D 2898, for fire-retardant treated
wood, wood-plastic composite and plastic lumber materials.

1.3.2. ASTM D 7032 for wood-plastic composite materials.
1.3.3. ASTM D 6662 for plastic lumber materials.
1.4. Identification. All materials shall bear identification showing the fire test results.
Exception: Materials comprised of a combustible core and a noncombustible exterior covering, comprised of either aluminum at a minimum 0.019 inch (0.48 mm) thickness or corrosion-resistant steel at a minimum 0.0149 inch (0.38 mm) thickness shall not be required to be tested with a ripped or cut longitudinal gap.

A consistent proposal is also being made to section 2303 of the IBC (Structural).

Cost Impact: Will not increase the cost of construction
ASTM E2768 is simply an alternate means for a wood product to be designated FRTW.

RB311-16 :
R802.1.5-
HIRSCHLER12083

Public Hearing Results

Committee Action: **Disapproved**

Committee Reason: The proposed test option is more restrictive than the existing tests and there is no need to add an option that is more restrictive.

Assembly Action: **None**

Individual Consideration Agenda

Public Comment 1:

Proponent : Marcelo Hirschler, representing GBH International (gbhint@aol.com) requests Approve as Modified by this Public Comment.

Modify as Follows:

2015 International Residential Code

R802.1.5 Fire-retardant-treated wood. Fire-retardant-treated wood (FRTW) is any ~~listed~~ wood product that, when impregnated with chemicals by a pressure process or other means during manufacture, shall comply with one of the following:
(1) It shall have, when tested in accordance with ASTM E 84 or UL 723, a listed flame spread index of 25 or less and ~~show no evidence of significant progressive combustion when the test is continued for an additional 20-minute period. In addition,~~ the flame front shall not progress more than 10.5 feet (3200 mm) beyond the center line of the burners at any time during the test , when the test is continued for an additional 20-minute period..
(2) It shall be listed to ~~both~~ comply with all of the requirements of ASTM E2768, ~~and also show no evidence of significant progressive combustion during the 30 minute test,~~ when tested on ~~all~~ both the front and back sides ~~with a ripped or cut longitudinal gap of 1/8 inch (3.2 mm)~~.

Commenter's Reason: This public comment eliminates the requirement for "no evidence of significant progressive combustion" which is unnecessary because it is undefined and there is no evidence as to how to measure it, which makes it very subjective and prone to misleading information. Fire testing labs have used as the corresponding criterion that the flame front in the ASTM E84 test does not progress more than 10.5 ft. beyond the centerline of the burners in either the 10 minute test or the continuation of the test for an additional 20 minutes (for a total of 30 minutes).
The public comment also proposes to add testing to ASTM E2768 as an alternate option (which is fully equivalent).

The term fire-retardant-treated wood is used in the IBC, the IRC, the IFC, the IMC and the IWUIC. It is also used in NFPA codes (NFPA 101, Life Safety Code and NFPA 5000, Building Code) and in NFPA 703 ("Standard for Fire Retardant–Treated Wood and Fire-Retardant Coatings for Building Materials"). It is also used in AC 66 (Acceptance Criteria for Fire-Retardant Treated Wood). However, neither in any of the ICC codes nor in any NFPA code or standard nor in AC 66 nor in ASTM E84 is there any description or guidance for what constitutes "no evidence of significant progressive combustion". However, there is one standard that contains the criterion for the assessment of "no evidence of significant progressive combustion". That standard is ASTM E2768 "Standard Test Method for Extended Duration Surface Burning Characteristics of Building Materials (30 min Tunnel Test)", dated 2011. It states, in the section on classification as follows: "The flame front shall not progress more than 10.5 ft (3.2 m) beyond the centerline of the burners at any time during the 30 min test period. This is considered evidence of no significant progressive combustion in this test method."

It has been stated that AC 66 (Acceptance Criteria for Fire-Retardant Treated Wood) describes the way in which "no evidence of significant progressive combustion" is assessed and that it includes references to the ASTM E69, "Standard Test Method for Combustible Properties of Treated Wood by the Fire-Tube Apparatus" (fire tube test) and to large scale fire tests. With regard to fire testing, the sole reference in AC 66 other than to ASTM E84 or UL 723 is to ASTM E69. There is also no information in AC 66 as to how to assess "no evidence of significant progressive combustion".

The June 2012 edition of AC 66 states as follows:

"5.5.4 Chemical Verification: In all cases, chemical verification shall conform to requirements outlined in the approved quality documentation. Verification shall be by means of fire tube tests or an assay of borings by chemical analysis, using nationally recognized test methods or other methods that have been validated to relate to results of fire tests conducted in accordance with Sections 3.1.4 and 3.2.4 of this criteria. Three fire-tube tests (ASTM E 69, Procedure B) shall be conducted on specimens processed with each charge treated. In lieu of the actual species treated, a standard lumber species, such as Douglas fir, may be used for fire tube testing on each charge. The average final percentage weight loss of the treated wood samples, after flaming and glowing have ceased, and the maximum temperature, shall be equal to or less than that obtained on the qualification-test specimens. The final percentage weight loss of any individual specimen shall not exceed the qualification value by more than five percentage points. Alternately, an assay of borings, by chemical analysis, may be used to verify the treatment process. This analysis shall be conducted on a composite of 20 borings per species per charge, on a representative sampling of the treated lumber. The result of this analysis shall substantiate equivalency to the qualification analysis. When the treatment process is verified by methods other than fire tube tests or an assay of borings, the approved quality documentation shall include a description of the verification method and conditions of acceptance."

"5.7.3 When conducting the ASTM E 69 fire tube test on samples from a load of treated lumber, (i.e., the charge) the charge is acceptable if the first three samples tested meet the quality control requirements. If one of the first three samples fails, an additional three samples may be tested. If all of the three additional samples meet the requirements, the charge is acceptable. If the charge is not acceptable, it shall be retreated and retested.

5.7.4 The solution concentration shall be within the range specified in the quality documentation. If the solution concentration is low, the charge shall be retreated with the proper solution.

5.7.5 The analysis of solution sampled by the quality control agency shall confirm proper chemical composition and concentration. If nonconforming, appropriate action shall be taken by the plant to adjust the solution. Additional samples shall then be analyzed on a weekly basis until conformance has been demonstrated in two consecutive samples. All lumber and plywood found to have been treated with a nonconforming solution shall be segregated and labeled as nonconforming. A representative sampling of the nonconforming lumber and plywood selected by the quality control agency shall be tested, and shall meet the flame spread and strength requirements of the code before it may be released.

5.7.6 The charge retention shall be within the specified range of gage retention of fire-retardant chemical, as determined during qualification testing for the applicable material and species. If retention is below the minimum, the charge shall be retreated so that the total retention is within the minimum and maximum qualified values. If retention is above the maximum allowed, the lumber or plywood in the charge shall not be stamped."

For further information, sections 3.1.4 and 3.2.4 of AC 66 contain the same criteria that the IBC and other codes have, namely

"3.1.4 Surface Burning Characteristics The surface burning characteristics (flame spread and smoke-developed index) shall be determined in accordance with ASTM E 84 or UL 723. The flame spread index shall be 25 or less and there shall be no evidence of significant progressive combustion when the test is continued for an additional 20-minute period. Additionally, the flame front shall not progress more than 10½ feet (3200 mm) beyond the centerline of the burners at any time during the test. The smoke-developed index shall be 450 or less. For recognition of exterior use, tests shall be conducted both before and after durability tests conducted in accordance with Section 3.1.3. The FRT lumber shall meet the requirements of IBC Section 2303.2, IRC Section R802.1.3, UBC Section 207, SBC Section 202, or BNBC 2310.2, as applicable."

"3.2.4 Surface Burning Characteristics The surface burning characteristics (flame spread and smoke-developed index) shall be determined in accordance with ASTM E 84 or UL 723. The flame spread index shall be 25 or less and there shall be no evidence of significant progressive combustion when the test is continued for an additional 20-minute period. Additionally, the flame front shall not progress more than 10½ feet (3200 mm) beyond the centerline of the burners at any time during the test. The smoke-developed index shall be 450 or less. For recognition of exterior use, tests shall be conducted both before and after durability tests conducted in accordance with Section 3.2.3. The FRT plywood shall meet the requirements of Section 2303.2 of the IBC or Section R802.1.3 of the IRC, UBC Section 207, SBC Section 202, or BNBC Section 2310.2, as applicable."

No means has been proposed in any document other than in ASTM E2768 as to what constitutes "no evidence of significant progressive combustion". Fire testing labs have used as the corresponding criterion that the flame front in the ASTM E84 test does not progress more than 10.5 ft. beyond the centerline of the burners in either the 10 minute test of the continuation of the test for an additional 20 minutes (for a total of 30 minutes). Details follow.

The scope of ASTM E2768 includes the following statement: "The purpose of this fire-test-response standard is to evaluate the ability of a product to limit the surface spread of flame when evaluated for 30 min. This fire-test-response standard uses the apparatus and procedure of Test Method E84 with the total test period extended to 30 min."

The conditions of classification of ASTM E2768 include the following criteria:

1. The flame spread index shall be 25 or less as determined for the initial 10 min test period,
2. The flame front shall not progress more than 10.5 ft (3.2 m) beyond the centerline of the burners at any time during the 30 min test period. This is considered evidence of no significant progressive combustion in this test method.
3. For materials or products that are not homogeneous or symmetrical about their longitudinal axis, only surfaces that have been individually tested shall be eligible to be classified and reported as meeting the conditions of classification of this standard.

Public Comment 2:

Proponent : Marcelo Hirschler, representing GBH International (gbhint@aol.com) requests Approve as Modified by this Public Comment.

Modify as Follows:

2015 International Residential Code

R802.1.5 Fire-retardant-treated wood. Fire-retardant-treated wood (FRTW) is any ~~listed~~ wood product that, when impregnated with chemicals by a pressure process or other means during manufacture, ~~shall comply with one of the following: (1) It~~ shall have, when tested in accordance with ASTM E 84 or UL 723, a listed flame spread index of 25 or less and ~~show no evidence of significant progressive combustion when the test is continued for an additional 20-minute period. In addition~~, additionally the flame front shall not progress more than 10.5 feet (3200 mm) beyond the center line of the burners at any time during the test~~.~~
~~(2) It shall be listed to both comply with all of~~ when the ~~requirements of ASTM E2768, and also show no evidence of significant progressive combustion during the 30 minute~~ test~~, when tested on all sides with a ripped or cut longitudinal gap of 1/8 inch (3.2 mm)~~ is continued for an additional 20-minute period.

Commenter's Reason:
This public comment simply eliminates the requirement for "no evidence of significant progressive combustion" which is unnecessary because it is undefined and there is no evidence as to how to measure it, which makes it very subjective and prone to misleading information. Fire testing labs have used as the corresponding criterion that the flame front in the ASTM E84 test does not progress more than 10.5 ft. beyond the centerline of the burners in either the 10 minute test or the continuation of the test for an additional 20 minutes (for a total of 30 minutes).

The term fire-retardant-treated wood is used in the IBC, the IRC, the IFC, the IMC and the IWUIC. It is also used in NFPA codes (NFPA 101, Life Safety Code and NFPA 5000, Building Code) and in NFPA 703 ("Standard for Fire Retardant–Treated Wood and Fire-Retardant Coatings for Building Materials"). It is also used in AC 66 (Acceptance Criteria for Fire-Retardant Treated Wood). However, neither in any of the ICC codes nor in any NFPA code or standard nor in AC 66 nor in ASTM E84 is there any description or guidance for what constitutes "no evidence of significant progressive combustion". However, there is one standard that contains the criterion for the assessment of "no evidence of significant progressive combustion". That standard is ASTM E2768 "Standard Test Method for Extended Duration Surface Burning Characteristics of Building Materials (30 min Tunnel Test)", dated 2011. It states, in the section on classification as follows: "The flame front shall not progress more than 10.5 ft (3.2 m) beyond the centerline of the burners at any time during the 30 min test period. This is considered evidence of no significant progressive combustion in this test method."

This public comment does not propose adding ASTM E2768 into this section of the code (but an alternate public comment does).

It has been stated that AC 66 (Acceptance Criteria for Fire-Retardant Treated Wood) describes the way in which "no evidence of significant progressive combustion" is assessed and that it includes references to the ASTM E69, "Standard Test Method for Combustible Properties of Treated Wood by the Fire-Tube Apparatus" (fire tube test) and to large scale fire tests. With regard to fire testing, the sole reference in AC 66 other than to ASTM E84 or UL 723 is to ASTM E69. There is also no information in AC 66 as to how to assess "no evidence of significant progressive combustion".

The June 2012 edition of AC 66 states as follows:

"5.5.4 Chemical Verification: In all cases, chemical verification shall conform to requirements outlined in the approved quality documentation. Verification shall be by means of fire tube tests or an assay of borings by chemical analysis, using nationally recognized test methods or other methods that have been validated to relate to results of fire tests conducted in accordance

with Sections 3.1.4 and 3.2.4 of this criteria. Three fire-tube tests (ASTM E 69, Procedure B) shall be conducted on specimens processed with each charge treated. In lieu of the actual species treated, a standard lumber species, such as Douglas fir, may be used for fire tube testing on each charge. The average final percentage weight loss of the treated wood samples, after flaming and glowing have ceased, and the maximum temperature, shall be equal to or less than that obtained on the qualification-test specimens. The final percentage weight loss of any individual specimen shall not exceed the qualification value by more than five percentage points. Alternately, an assay of borings, by chemical analysis, may be used to verify the treatment process. This analysis shall be conducted on a composite of 20 borings per species per charge, on a representative sampling of the treated lumber. The result of this analysis shall substantiate equivalency to the qualification analysis. When the treatment process is verified by methods other than fire tube tests or an assay of borings, the approved quality documentation shall include a description of the verification method and conditions of acceptance."

"5.7.3 When conducting the ASTM E 69 fire tube test on samples from a load of treated lumber, (i.e., the charge) the charge is acceptable if the first three samples tested meet the quality control requirements. If one of the first three samples fails, an additional three samples may be tested. If all of the three additional samples meet the requirements, the charge is acceptable. If the charge is not acceptable, it shall be retreated and retested.

5.7.4 The solution concentration shall be within the range specified in the quality documentation. If the solution concentration is low, the charge shall be retreated with the proper solution.

5.7.5 The analysis of solution sampled by the quality control agency shall confirm proper chemical composition and concentration. If nonconforming, appropriate action shall be taken by the plant to adjust the solution. Additional samples shall then be analyzed on a weekly basis until conformance has been demonstrated in two consecutive samples. All lumber and plywood found to have been treated with a nonconforming solution shall be segregated and labeled as nonconforming. A representative sampling of the nonconforming lumber and plywood selected by the quality control agency shall be tested, and shall meet the flame spread and strength requirements of the code before it may be released.

5.7.6 The charge retention shall be within the specified range of gage retention of fire-retardant chemical, as determined during qualification testing for the applicable material and species. If retention is below the minimum, the charge shall be retreated so that the total retention is within the minimum and maximum qualified values. If retention is above the maximum allowed, the lumber or plywood in the charge shall not be stamped."

For further information, sections 3.1.4 and 3.2.4 of AC 66 contain the same criteria that the IBC and other codes have, namely

"3.1.4 Surface Burning Characteristics The surface burning characteristics (flame spread and smoke-developed index) shall be determined in accordance with ASTM E 84 or UL 723. The flame spread index shall be 25 or less and there shall be no evidence of significant progressive combustion when the test is continued for an additional 20-minute period. Additionally, the flame front shall not progress more than 10½ feet (3200 mm) beyond the centerline of the burners at any time during the test. The smoke-developed index shall be 450 or less. For recognition of exterior use, tests shall be conducted both before and after durability tests conducted in accordance with Section 3.1.3. The FRT lumber shall meet the requirements of IBC Section 2303.2, IRC Section R802.1.3, UBC Section 207, SBC Section 202, or BNBC 2310.2, as applicable."

"3.2.4 Surface Burning Characteristics The surface burning characteristics (flame spread and smoke-developed index) shall be determined in accordance with ASTM E 84 or UL 723. The flame spread index shall be 25 or less and there shall be no evidence of significant progressive combustion when the test is continued for an additional 20-minute period. Additionally, the flame front shall not progress more than 10½ feet (3200 mm) beyond the centerline of the burners at any time during the test. The smoke-developed index shall be 450 or less. For recognition of exterior use, tests shall be conducted both before and after durability tests conducted in accordance with Section 3.2.3. The FRT plywood shall meet the requirements of Section 2303.2 of the IBC or Section R802.1.3 of the IRC, UBC Section 207, SBC Section 202, or BNBC Section 2310.2, as applicable."

No means has been proposed in any document other than in ASTM E2768 as to what constitutes "no evidence of significant progressive combustion". Details follow, for information.

The scope of ASTM E2768 includes the following statement: "The purpose of this fire-test-response standard is to evaluate the ability of a product to limit the surface spread of flame when evaluated for 30 min. This fire-test-response standard uses the apparatus and procedure of Test Method E84 with the total test period extended to 30 min."

The conditions of classification of ASTM E2768 include the following criteria:

1. The flame spread index shall be 25 or less as determined for the initial 10 min test period,
2. The flame front shall not progress more than 10.5 ft (3.2 m) beyond the centerline of the burners at any time during the 30 min test period. This is considered evidence of no significant progressive combustion in this test method.
3. For materials or products that are not homogeneous or symmetrical about their longitudinal axis, only surfaces that have been individually tested shall be eligible to be classified and reported as meeting the conditions of classification of this standard.

Public Comment 3:

Proponent : Joseph Holland, Hoover Treated Wood Products, representing Hoover Treated Wood Products (jholland@frtw.com) requests Approve as Modified by this Public Comment.

Modify as Follows:

2015 International Residential Code

R802.1.5 Fire-retardant-treated wood. Fire-retardant-treated wood (FRTW) is any listed wood product that, when impregnated with chemicals by a pressure process or other means during manufacture, shall comply with one of the following: (1) It shall have, when tested in accordance with ASTM E 84 or UL 723, a listed flame spread index of 25 or less and show no evidence of significant progressive combustion when the test is continued for an additional 20-minute period. In addition, the flame front shall not progress more than 10.5 feet (3200 mm) beyond the center line of the burners at any time during the test. (2) It shall be listed to both comply with all of the requirements of ASTM E2768, and also show no evidence of significant progressive combustion during the 30 minute test~~, when~~ . Wood structural panels shall be tested ~~on all sides~~ with a ripped or cut longitudinal gap of 1/8 inch (3.2 mm).

Commenter's Reason: History:
Pressure impregnated fire-retardant-treated wood or wood where the impregnation occurs during manufacture are the only products required by the code to be tested using ASTM E84 for 30 minutes. The E84 test is a ten minute test used for interior finish. A member of the fire retardant pressure impregnation treating industry approached the D7 (Wood) Committee to create a standard for testing fire-retardant-treated wood in the Steiner Tunnel for 30 minutes as required by the building code. After consideration of such a standard, D7 approached E5 to develop a standard for a broad range of materials. ASTM E2768 is the product of that effort.

Concern:

- The standard will allow testing material for use in load bearing and nonload bearing applications.
- The ASTM E2768 standard only looks at the surface of a material.
- ASTM E2768 allows one to classify materials based on testing only one surface.

The testing of only the surface of a material as well as only one surface may be appropriate if one were testing for use only as an interior finish material where it is not concealed behind other construction. The NFPA 101, Chapter 10, Interior Finish, allows factory applied coating for use as an interior finish, a nonstructural application, when tested for 30 minutes. It is not appropriate for a material tested for 30 minutes used for load bearing applications in walls and roofs.

Codes and standards:

- Recognize surface treatment only for interior finish.
- Do not recognize surface treatments for load bearing applications.
- The only material tested for 30 minutes recognized by codes and standards for use in load bearing applications is fire-retardant-treated wood. Fire-retardant-treated wood must be impregnated by a pressure process or other means during manufacture.

Summary:

The code needs the 1/8 inch gap::

- to separate the materials tested for interior finish as spelled out in Section 10.2.6.2, NFPA 101, 2015 edition
- for material used in load bearing applications
- for material used in concealed spaces.

Public Comment 4:

Proponent : Manny Muniz, representing Myself (Mannymuniz.mm@gmail.com) requests Approve as Modified by this Public Comment.

Modify as Follows:

2015 International Residential Code

R802.1.5 Fire-retardant-treated wood. Fire-retardant-treated wood (FRTW) is any listed wood product that, when impregnated with chemicals by a pressure process or other means during manufacture, shall comply with one of the following: (1) It shall have, when tested in accordance with ASTM E 84 or UL 723, a listed flame spread index of 25 or less and show no evidence of significant progressive combustion when the test is continued for an additional 20-minute period. In addition, the flame front shall not progress more than 10.5 feet (3200 mm) beyond the center line of the burners at any time during the test.

(2) ~~It~~ Lumber and wood structural panels impregnated with chemicals by a process other than a pressure process shall be listed ~~to both comply~~ in accordance with ~~all of the requirements of~~ ASTM E2768, and also show no evidence of significant progressive combustion during the 30 minute test~~, when~~ . Lumber shall be tested on all sides. Wood structural panels shall be tested with a ripped or cut longitudinal gap of 1/8 inch (3.2 mm) located between the burners.

Commenter's Reason: The intent of this public comment is to clarify that ASTM E2768 is appropriate for the testing and listing of lumber and wood structural panels impregnated with chemicals by a process other than a pressure process, that lumber must be tested on all sides and that wood structural panels that are impregnated with chemicals by other means must be tested with a 1/8 inch gap. The **APA – The Engineered Wood Association** specifically recommends a 1/8-inch space between panel edge and end joints. *"Plywood and oriented strand board (OSB), like all wood products, will expand or shrink with changes in moisture content. If the wood structural panels are tightly butted, there is no room for expansion and buckling can occur."*

RB311-16

RB312-16
IRC: R802.1.5.2.

Proposed Change as Submitted

Proponent : Joseph Holland, Hoover Treated Wood Products (jholland@frtw.com)

2015 International Residential Code

R802.1.5.2 Other means during manufacture. For wood products ~~produced~~ impregnated with chemicals by other means during manufacture the treatment shall be an integral part of the manufacturing process of the wood product. The treatment shall provide permanent protection to all surfaces of the wood product. The use of paints coating stains and other surface treatment shall not be permitted.

Reason: This section is subject to misinterpretation. The phrase "other means during manufacture" is often quoted as "other means" leaving it open to nonconforming material such as paints, stains and other surface treatments. These surface treatments are not permanent. They are subject to abrasion, degradation from exposure to rain during installation, and flaking or peeling due to the difference in the expansion coefficient of the two materials. When used as roof sheathing the material can be subjected to temperature swings of 100 degrees F or more and during winter months exposure to substantial moisture can be expected.
All of the testing (full scale, large scale and small scale) done on fire-retardant-treated wood in order to be recognized in the code was done on pressure impregnated lumber and plywood.

Cost Impact: Will not increase the cost of construction
Material now recognized is pressure impregnated or the furnish (chips, strands, and flakes) is treated during the manufacturing process. There is no change in those requirements

RB312-16 :
R802.1.5.2-
HOLLAND11589

Public Hearing Results

Errata: In Section R802.1.5.2, the proposed last sentence is missing commas and should read as follows:
The use of paints, coating, stains and other surface treatment shall not be permitted.

Committee Action: **Disapproved**

Committee Reason: The committee felt this proposal would eliminate a whole class of product that could pass the test and be used as an alternative. This last sentence should be reworked to alleviate this problem.

Assembly Action: **None**

Individual Consideration Agenda

Public Comment 1:

Proponent : Joseph Holland, Hoover Treated Wood Products, representing Hoover Treated Wood Products (jholland@frtw.com) requests Approve as Modified by this Public Comment.

Modify as Follows:

2015 International Residential Code

R802.1.5.2 Other means during manufacture. For wood products impregnated with chemicals by other means during manufacture the treatment shall be an integral part of the manufacturing process of the wood product. The treatment shall provide permanent protection to all surfaces of the wood product. The use of paints, coating, stains, and other surface ~~treatment shall~~ treatments are not ~~be permitted~~ an approved method of protection as required in this section.

Commenter's Reason: This provision was approved by the structural committee as shown in the modification.
This section is subject to misinterpretation. The phrase "other means during manufacture" is often quoted as "other means" leaving it open to nonconforming material such as paints, stains and other surface treatments. These surface treatments are not permanent. They are subject to abrasion, degradation from exposure to rain during installation, and flaking or peeling due to the difference in the expansion coefficient of the tw o materials. When used as roof sheathing the material can be subjected

to temperature swings of 100 degrees F or more and during w inter months exposure to substantial moisture can be expected. All of the testing (full scale, large scale and small scale) done on fire-retardant-treated w ood in order to be recognized in the code was done on pressure impregnated lumber and plywood.

FlameDxx Pictures

Roof Applications

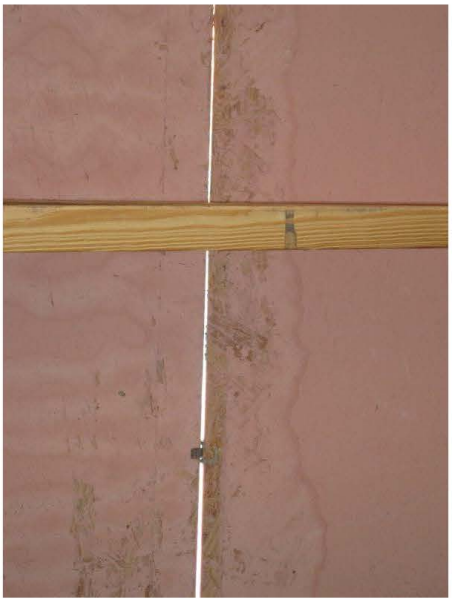

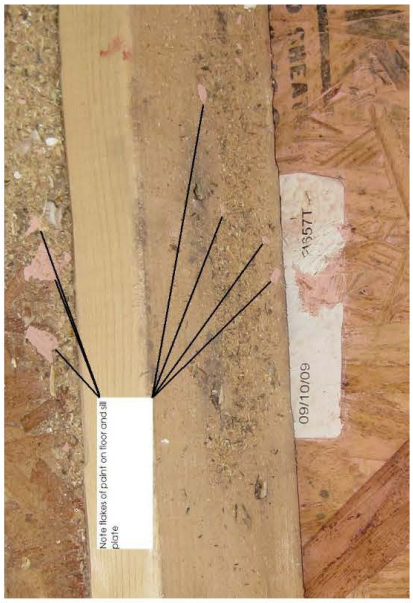

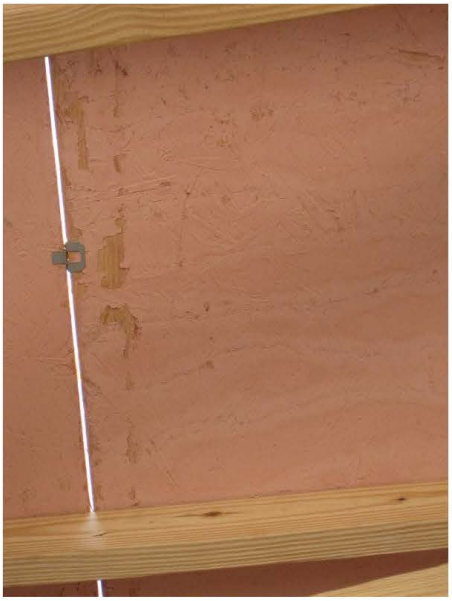

RB312-16

RB313-16
IRC: R802.1.5.3.

Proposed Change as Submitted

Proponent : Marcelo Hirschler, representing GBH International (gbhint@aol.com)

2015 International Residential Code

Delete without substitution:

R802.1.5.3 Testing. ~~For wood products produced by other means during manufacture, other than a pressure process, all sides of the wood product shall be tested in accordance with and produce the results required in Section R802.1.5. Testing of only the front and back faces of wood structural panels shall be permitted.~~

Reason: This code section simply includes added testing requirements (and thus added burden) to fire-retardant treated wood materials that have been manufactured by a process different than pressure treatment. Note that all fire retardant treated wood products must meet the requirements of section 802.1.5 (which contains the fire test requirements). Moreover, all fire retardant tread wood products, irrespective of how they are manufactured, must meet the requirements (also contained in section 802.1.5) that they must be impregnated with chemicals. A wood material can only be fire retardant treated wood if it is impregnated with chemicals and that will differentiate it from fire retardant coated materials.
Testing requirements should be a function of performance and not of the way a product is made. There is no reason that some fire retardant treated wood materials should be treated in a different fashion by the code as a function of how they are manufactured.
If it is believed that it is important that all side of a fire retardant treated wood product be tested for fire safety, then 802.1.5.3 can be rewritten as follows, in which case also all products are treated the same way, without differences as a function of how they are manufactured:
"802.1.5.3 Testing. All sides of the fire retardant treated wood product shall be tested in accordance with and produce the results required in Section 802.1.5.
Wood structural panels shall be permitted to test only the front and back faces."
A proposal consistent with this proposal is also being made to IBC 2303.2 (IBC Structural).

Cost Impact: Will not increase the cost of construction
This proposal will lower the excessive burden of fire testing for some materials as a function of how they are manufactured and not of their performance.

RB313-16 :
R802.1.5.3-
HIRSCHLER12082

Public Hearing Results

Committee Action: **Disapproved**

Committee Reason: The committee felt this proposal would eliminate an option for FRTW and it needs to remain in the code.

Assembly Action: **None**

Individual Consideration Agenda

Proponent : Marcelo Hirschler, representing GBH International (gbhint@aol.com) requests Approve as Submitted.

Commenter's Reason: This section does nothing technically because the prior section already states that protection to all sides is required.
There is no reason to have to test products in different ways as a function of how they are manufactured. This section does nothing other than add an excessive testing burden on manufacturers who choose a process other than pressure treatment for making fire retardant treated wood (FRTW). During the committee proposal stage there was a lot of discussion about the long history of FRTW: that is great and this proposal does not propose to deny that the product has been around for many years and performs well: the issue is not to provide a competitive advantage to one method of manufacturing FRTW. Testimony also discussed that there needs to be a distinction between products that are "impregnated" and products that are "coated". This section does not do anything to address that issue because the test requirements can be "passed" without impregnating the wood, by just coating all sides. Moreover, since new test specimens are needed every time that a material is tested, if all sides are coated (or impregnated) how does a lab know which side has been tested and which side has not been tested? Top and

bottom look the same (for panels) and the sides look the same (for products such as two by fours). Moreover, it is highly impractical (if not almost impossible) to test the ends of products such as two by fours in the ASTM E84 tunnel, since the sections would not be held in place but would fall into the tunnel.

This section serves no fire safety purpose as written.

The technical committee stated that the testimony was confusing and asked for further documentation.

Test specimens in the ASTM E84 test method must be 24 ft long by 20 to 24 inches wide and the maximum thickness is 4 inches. Test specimens can be provided in one of two ways: (1) a continuous, unbroken length; (2) sections that will be joined or butted end-to-end. Wood products are required to be tested using practice ASTM E2579, which (as stated in ASTM E84) applies to the following wood products: "solid board, lumber and timber products (including solid boards, lumber, timber, fingerjoined lumber, glulam, laminate wood, laminated veneer lumber and parallel strand lumber products), panel products (including fibreboard, hardboard, oriented strandboard, waferboard, and plywood panel products), decorative wood products (including fine woodwork, millwork and moulding) and shingles and shakes used as interior wall and ceiling finish and interior trim as well as to laminated products factory-produced with a wood substrate", which means that it applies to all wood products.

Therefore if we want to test ends of products they would have to be cut to 4 inch lengths and nailed or fastened or glued together and it would require a very large number (actually 864, for a 2 x 4) of small pieces, which is not practical.

RB313-16

RB322-16

IRC: R806.1, R806.2, R806.3 (New).

Proposed Change as Submitted

Proponent : Mike Fischer, Kellen, representing Asphalt Roofing Manufacturers Association (mfischer@kellencompany.com)

2015 International Residential Code

Revise as follows:

R806.1 Ventilation required. ~~Enclosed~~

For roofs with slopes equal to or greater than 2:12, enclosed attics and enclosed rafter spaces formed where ceilings are applied directly to the underside of roof rafters shall have cross ventilation for each separate space by ventilating openings protected against the entrance of rain or snow. Ventilation openings shall have a least dimension of $^{1}/_{16}$ inch (1.6 mm) minimum and $^{1}/_{4}$ inch (6.4 mm) maximum. Ventilation openings having a least dimension larger than $^{1}/_{4}$ inch (6.4 mm) shall be provided with corrosion-resistant wire cloth screening, hardware cloth or similar material with openings having a least dimension of $^{1}/_{16}$ inch (1.6 mm) minimum and $^{1}/_{4}$ inch (6.4 mm) maximum. Openings in roof framing members shall conform to the requirements of Section R802.7. Required ventilation openings shall open directly to the outside air.

R806.2 Minimum vent area. The minimum net free ventilating area shall be $^{1}/_{150}$ of the area of the vented space.

- ~~**Exception:** The minimum net free ventilation area shall be $^{1}/_{300}$ of the vented space provided one or more of the following conditions are met:~~
  1. ~~In Climate Zones 6, 7 and 8, a Class I or II vapor retarder is installed on the warm-in-winter side of the ceiling.~~
  2. ~~Not less than 40 percent and not more than 50 percent of the required ventilating area is provided by ventilators located in the upper portion of the attic or rafter space. Upper ventilators shall be located not more than 3 feet (914 mm) below the ridge or highest point of the space, measured vertically, with the balance of the required ventilation provided by eave or cornice vents. Where the location of wall or roof framing members conflicts with the installation of upper ventilators, installation more than 3 feet (914 mm) below the ridge or highest point of the space shall be permitted.~~

In Climate Zones 6, 7 and 8, a Class I or II vapor retarder shall be installed on the warm-in-winter side of the ceiling.

Add new text as follows:

R806.3 Balanced ventilation. Not less than 40 percent and not more than 50 percent of the required ventilating area shall be provided by ventilators located in the upper portion of the attic or rafter space. Upper ventilators shall be located not more than 3 feet (914 mm) below the ridge or highest point of the space, measured vertically, with the balance of the required ventilation provided by eave or cornice vents. Where the location of wall or roof framing members conflicts with the installation of upper ventilators, installation more than 3 feet (914 mm) below the ridge or highest point of the space shall be permitted. Intake and exhaust vents shall be provided in accordance with Section R806 and the vent product manufacturer's *approved* installation instructions.

Reason: Attic ventilation should be balanced. Ventilation device manufacturers and the National Roofing Contractors Association recommend that ventilation be balanced. This separates the requirement for balanced ventilation from the required amount of ventilation. Proper ventilation occurs when there is intake (at the eaves) and exhaust in the upper portion of the attic (ridge or near ridge), allowing the convective flow to occur whereby removing excess heat and moisture from the attic.

Cost Impact: Will increase the cost of construction

The proposal will increase the amount of required vents.

RB322-16 :
R806.1-
FISCHER13543

Public Hearing Results

Committee Action: **Disapproved**

Committee Reason: This change would eliminate the 1/300 rate and there is no evidence that the 1/ 300 rate is not adequate.

Assembly Action: **None**

Individual Consideration Agenda

Public Comment 1:

Proponent : Mike Fischer, Kellen, representing Asphalt Roofing Manufacturers Association (mfischer@kellencompany.com) requests Approve as Modified by this Public Comment.

Modify as Follows:

2015 International Residential Code

~~**R806.2 Minimum vent area.** The minimum net free ventilating area shall be $^{1}/_{150}$ of the area of the vented space. In Climate Zones 6, 7 and 8, a Class I or II vapor retarder shall be installed on the warm-in-winter side of the ceiling.~~

~~**R806.3**~~ **R806.2.1 Balanced ventilation.** Not less than 40 percent and not more than 50 percent of the required ventilating area shall be provided by ventilators located in the upper portion of the attic or rafter space. Upper ventilators shall be located not more than 3 feet (914 mm) below the ridge or highest point of the space, measured vertically, with the balance of the required ventilation provided by eave or cornice vents. Where the location of wall or roof framing members conflicts with the installation of upper ventilators, installation more than 3 feet (914 mm) below the ridge or highest point of the space shall be permitted. Intake and exhaust vents shall be provided in accordance with Section R806 and the vent product manufacturer's *approved* installation instructions. In Climate Zones 6, 7 and 8, a Class I or II vapor retarder shall be installed on the warm-in-winter side of the ceiling.

Exception: For installations that do not comply with R806.2.1, the minimum net free ventilation area shall be 1/150 of the vented space.

Commenter's Reason: This public comment is an editorial change to the current requirements. Balanced ventilation should be the default condition; the revised proposal restores the current code requirements for net free area and vapor retarders, but moves the increased area option as an exception rather than the rule.

Public Comment 2:

Proponent : James Kirby, Kellen, representing Asphalt Roofing Manufacturers Associationm (jameskirby47@icloud.com) requests Approve as Modified by this Public Comment.

Modify as Follows:

2015 International Residential Code

R806.1 Ventilation required. For roofs with slopes equal to or greater than 2:12, enclosed attics and enclosed rafter spaces formed where ceilings are applied directly to the underside of roof rafters shall have cross ventilation for each separate space by ventilating openings protected against the entrance of rain or snow. Ventilation openings shall have a least dimension of $^{1}/_{16}$ inch (1.6 mm) minimum and $^{1}/_{4}$ inch (6.4 mm) maximum. Ventilation openings having a least dimension larger than $^{1}/_{4}$ inch (6.4 mm) shall be provided with corrosion-resistant wire cloth screening, hardware cloth or similar material with openings having a least dimension of $^{1}/_{16}$ inch (1.6 mm) minimum and $^{1}/_{4}$ inch (6.4 mm) maximum. Openings in roof framing members shall conform to the requirements of Section R802.7. Required ventilation openings shall open directly to the outside air.

R806.2 ~~**Minimum vent area**~~ **Ventilation installation.** The minimum net free ventilating area shall be $^{1}/_{150}$ 300 of the area of the vented space. ~~In Climate Zones 6, 7 and 8, a Class I or II vapor retarder shall be installed on the warm-in-winter side of the ceiling.~~

~~**R806.3**~~ **R806.2.1 Balanced ventilation.** Not less than 40 percent and not more than 50 percent of the required ventilating area shall be provided by ventilators located in the upper portion of the attic or rafter space. Upper ventilators shall be located not more than 3 feet (914 mm) below the ridge or highest point of the space, measured vertically, with the balance of the required ventilation provided by eave or cornice vents. Where the location of wall or roof framing members conflicts with the installation of upper ventilators, installation more than 3 feet (914 mm) below the ridge or highest point of the space shall be permitted. Intake and exhaust vents shall be provided in accordance with Section R806 and the vent product manufacturer's ~~*approved*~~ installation instructions. In Climate Zones 6, 7, and 8, a Class I or II vapor retarder shall be installed on the warm-in-winter side of the ceiling.

Exception: For installations that do not comply with R806.2.1, the minimum net free ventilation area shall be 1/150 of the vented space.

Commenter's Reason: The IRC Building Committee dissapproved the original proposal because it attempted to remove the 1/300 ventilation requirement. This Public Comment As Modified makes 1/300 the base requirement, including balanced ventilation and vapor retarder requirements. The exception is to allow 1/150 if base requirements are not met.

RB322-16

RB327-16

IRC: R202 (New), R806.5.

Proposed Change as Submitted

Proponent : Craig Conner, representing self (craig.conner@mac.com); Joseph Lstiburek, representing self (joe@buildingscience.com)

2015 International Residential Code

Add new definition as follows:

SECTION R202 DEFINITIONS

Vapor Diffusion Port. A passageway for conveying water vapor from an unvented attic to the outside atmosphere.

Revise as follows:

R806.5 Unvented attic and unvented enclosed rafter assemblies. Unvented *attics* and unvented enclosed roof framing assemblies created by ceilings that are applied directly to the underside of the roof framing members and structural roof sheathing applied directly to the top of the roof framing members/rafters, shall be permitted where all the following conditions are met:

1. The unvented *attic* space is completely within the *building thermal envelope*.
2. No interior Class I vapor retarders are installed on the ceiling side (*attic* floor) of the unvented *attic* assembly or on the ceiling side of the unvented enclosed roof framing assembly.
3. Where wood shingles or shakes are used, a minimum $^{1}/_{4}$-inch (6.4 mm) vented airspace separates the shingles or shakes and the roofing underlayment above the structural sheathing.
4. In Climate Zones 5, 6, 7 and 8, any *air-impermeable insulation* shall be a Class II vapor retarder, or shall have a Class II vapor retarder coating or covering in direct contact with the underside of the insulation.
5. Insulation shall ~~be located in accordance with the following with~~ comply with either 5.1 or 5.2, and additionally 5.3:
   - 5.1. Item 5.1.1, 5.1.2, 5.1.3 or 5.1.4 shall be met, depending on the air permeability of the insulation directly under the structural roof sheathing.
     - 5.1.1. Where only *air-impermeable insulation* is provided, it shall be applied in direct contact with the underside of the structural roof sheathing.
     - 5.1.2. Where *air-permeable insulation* is provided inside the building thermal envelope, it shall be installed in accordance with Section 5.1. In addition to the *air-permeable insulation* installed directly below the structural sheathing, rigid board or sheet insulation shall be installed directly above the structural roof sheathing in accordance with the *R*-values in Table R806.5 for condensation control.
     - 5.1.3. Where both *air-impermeable* and *air-permeable insulation* are provided, the *air-impermeable insulation* shall be applied in direct contact with the underside of the structural roof sheathing in accordance with Item 5.1.1 and shall be in accordance with the *R*-values in Table R806.5 for condensation control. The *air-permeable insulation* shall be installed directly under the *air-impermeable insulation*.
     - 5.1.4. Alternatively, sufficient rigid board or sheet insulation shall be installed directly above the structural roof sheathing to maintain the monthly average temperature of the underside of the structural roof sheathing above 45°F (7°C). For calculation purposes, an interior air temperature of 68°F (20°C) is assumed and the exterior air temperature is assumed to be the monthly average outside air temperature of the three coldest months.
   - 5.2. In climate zones 1, 2, and 3 when air-permeable insulation is installed in unvented attics it shall meet the following requirements: 1) An *approved vapor diffusion port* shall be installed not more than 12 inches (305mm) from the highest point of the roof, measured vertically from the highest point of the roof to the lower edge of the port. 2) The port area shall be ≥ 1:600 of the ceiling area. Where there are multiple ports in the attic, the sum of the port areas shall be greater than or equal to the area requirement. 3) The vapor permeable membrane in the *vapor diffusion port* shall have a vapor permeance rating of ≥20 perms when tested in accordance with Procedure A of ASTM E96. 4) The *vapor diffusion port* shall serve as an *air barrier* between the attic and the exterior of the building. 5) The *vapor diffusion port* shall protect the attic against the entrance of rain and snow. 6) Framing members and blocking shall not block the free flow of water vapor to the port. Not less than a 2-inch (50 mm) space shall be provided between any blocking and the roof sheathing. Air-permeable insulation shall be permitted within that space. 7) The roof slope shall be ≥3:12 (vertical/horizontal). 8) Where only air-permeable insulation is used, it shall be installed directly below the structural roof sheathing. 9) Air-impermeable insulation, if any, shall be directly above or below the structural roof sheathing and is not required to meet the R-value in in table 806.5. When directly below the structural roof

sheathing, there shall be no space between the air-impermeable and air-permeable insulation.
10) The air shall be supplied at a flow rate ≥50 CFM (23.6 L/s) per 1000 ft2 of ceiling. The air shall be supplied from ductwork providing supply air to the occupiable space when the conditioning system is operating. Alternatively, the air shall be supplied by a supply fan when the conditioning system is operating.

5.3. Where preformed insulation board is used as the air-impermeable insulation layer, it shall be sealed at the perimeter of each individual sheet interior surface to form a continuous layer.

Reason: Unvented attic assemblies have a record of success. Unvented attic assemblies are most commonly constructed with spray polyurethane foam applied directly to the underside of the roof deck. This is a historically successful method of construction with over 20 years of experience. Another approach to unvented attic assemblies is to insulate over the top of the roof deck w ith rigid insulation boards.

The proposed code change allows the use of lower cost alternatives. Specifically, the proposed code change allows the use of fiberglass batts, blown cellulose and blown fiberglass to construct unvented attic assemblies. The approach is limited to Climate Zones 1, 2 and 3 based on research and historic experience over the past decade.

The proposed code change adds a vapor diffusion port/vent. The port acts as a moisture control measure, allowing moisture in the attic to be removed by vapor diffusion rather than by air change. This allow s the attic assembly to remain airtight while providing a path for vapor moisture via vapor diffusion. Airtight attics also benefit energy efficiency.

This allows alternatives to rigid board and spray polyurethane foam. Alternatives provides more material choices for designers, builders and consumers who have issues with the greenhouse gas potential of blowing agents, impacts of fire retardants and off-gassing of some insulation products. Or just want to try a less expensive option.

Adding new unvented attic options to the existing options provides additional benefits. In high wildfire regions the elimination of eave vents and air sealing the upper attic vents at ridges reduces the entry of embers. In hurricane zones the elimination of roof vents reduces the entry of rainwater during hurricane events.

The research work supporting this code change is an outgrowth of the original research work supporting unvented attic assemblies started in 1995 under the Department of Energy's Building America Program. The same technical team and the same technical rigor that supported the original code changes for unvented attics in the early 2000's are behind this proposed code change.

The technical rationale and research behind this code change can be found at Venting Vapor (http://buildingscience.com/documents/insights/bsi-088-venting-vapor?topic=doctypes/insights). For a history of conditioned attics, see Cool Hand Luke Meets Attics (http://buildingscience.com/documents/insights/bsi-077-cool-hand-luke-meets-attics). Here is the technical data (http://buildingscience.com/sites/default/files/document/ba-1511_field_testing_of_unvented_roof_with_fibrous_insulation_tiles_and_vapor_diffusion_venting.pdf) and more technical data (http://buildingscience.com/documents/building-america-reports/ba-1409-field-testing-unvented-roofs-asphalt-shingles-cold-and) (link to research report at lower right of page on web site).

Cost Impact: Will not increase the cost of construction
This will provide options.

RB327-16 : R806.5-CONNER13324

Public Hearing Results

Committee Action: **Approved as Submitted**

Committee Reason: The committee approved this proposal based on the proponents published reason statement and there was no testimony from opponents that the science will not work. This adds a good option for unvented attics.

Assembly Action: **None**

Individual Consideration Agenda

Public Comment 1:

Proponent : Mike Fischer, Kellen, representing Asphalt Roofing Manufacturers Association (mfischer@kellencompany.com) requests Approve as Modified by this Public Comment.

Modify as Follows:

2015 International Residential Code

SECTION R202 DEFINITIONS

Vapor Diffusion Port. ~~A passageway for conveying~~ An assembly constructed or installed within a roof assembly at an opening in the roof deck to convey water vapor from an unvented attic to the outside atmosphere.

R806.5 Unvented attic and unvented enclosed rafter assemblies. Unvented *attics*andunvented enclosed roof framing assemblies created by ceilings that are applied directly to the underside of the roof framing members and structural roof sheathing applied directly to the top of the roof framing members/rafters, shall be permitted where all the following conditions are met:

1. The unvented *attic* space is completely within the *building thermal envelope*.
2. No interior Class I vapor retarders are installed on the ceiling side (*attic* floor) of the unvented *attic* assembly or on the ceiling side of the unvented enclosed roof framing assembly.
3. Where wood shingles or shakes are used, a minimum $^{1}/_{4}$-inch (6.4 mm) vented airspace separates the shingles or shakes and the roofing underlayment above the structural sheathing.
4. In Climate Zones 5, 6, 7 and 8, any *air-impermeable insulation* shall be a Class II vapor retarder, or shall have a Class II vapor retarder coating or covering in direct contact with the underside of the insulation.
5. Insulation shall comply with either 5.1 or 5.2, and additionally 5.3:
   - 5.1. Item 5.1.1, 5.1.2, 5.1.3 or 5.1.4 shall be met, depending on the air permeability of the insulation directly under the structural roof sheathing.
     - 5.1.1. Where only *air-impermeable insulation* is provided, it shall be applied in direct contact with the underside of the structural roof sheathing.
     - 5.1.2. Where *air-permeable insulation* is provided inside the building thermal envelope, it shall be installed in accordance with Section 5.1. In addition to the *air-permeable insulation* installed directly below the structural sheathing, rigid board or sheet insulation shall be installed directly above the structural roof sheathing in accordance with the *R*-values in Table R806.5 for condensation control.
     - 5.1.3. Where both *air-impermeable* and *air-permeable insulation* are provided, the *air-impermeable insulation* shall be applied in direct contact with the underside of the structural roof sheathing in accordance with Item 5.1.1 and shall be in accordance with the *R*-values in Table R806.5 for condensation control. The *air-permeable insulation* shall be installed directly under the *air-impermeable insulation*.
     - 5.1.4. Alternatively, sufficient rigid board or sheet insulation shall be installed directly above the structural roof sheathing to maintain the monthly average temperature of the underside of the structural roof sheathing above 45°F (7°C). For calculation purposes, an interior air temperature of 68°F (20°C) is assumed and the exterior air temperature is assumed to be the monthly average outside air temperature of the three coldest months.
   - 5.2. In climate zones 1, 2, and 3 when air-permeable insulation is installed in unvented attics it shall meet the following requirements: 1) An *approved vapor diffusion port* shall be installed not more than 12 inches (305mm) from the highest point of the roof, measured within the plane of the roof from ~~vertically from~~ the highest point of the roof to the lower edge of the port. 2) The port area shall be ≥ 1:600 of the ceiling area. Where there are multiple ports in the attic, the sum of the port areas shall be greater than or equal to the area requirement. The ports shall be distributed equally throughout the attic space. 3) The vapor diffusion port shall include an approved vapor permeable and water-resistive membrane that is open to the outside air. The vapor permeable membrane in the *vapor diffusion port* shall have a vapor permeance rating of ≥20 perms when tested in accordance with Procedure A of ASTM E96. 4) The *vapor diffusion port* shall serve as an *air barrier* between the attic and the exterior of the building. 5) The *vapor diffusion port* shall protect the attic against the entrance of rain and snow. 6) Framing members and blocking shall not block the free flow of water vapor to the port. Not less than a 2-inch (50 mm) space shall be provided between any blocking and the roof sheathing. Air-permeable insulation shall be permitted within that space. 7) The roof slope shall be ≥3:12 (vertical/horizontal). 8) Where only air-permeable insulation is used, it shall be installed directly below the structural roof sheathing. 9) Air-impermeable insulation, if any, shall be directly above or below the structural roof sheathing and is not required to meet the R-value in in Table 806.5. When directly below the structural roof sheathing, there shall be no space between the air-impermeable and air-permeable insulation. 10) The air shall be supplied at a flow rate ≥50 CFM (23.6 L/s) per 1000 ft2 of ceiling. The air shall be supplied from ductwork providing supply air to the occupiable space when the conditioning system is operating. Alternatively, the air shall be supplied by a supply fan when the conditioning system is operating.
   - 5.3. Where preformed insulation board is used as the air-impermeable insulation layer, it shall be sealed at the perimeter of each individual sheet interior surface to form a continuous layer.

Commenter's Reason: ARMA believes that the proposal to add the Vapor Diffusion Port to roof assemblies does not provide sufficient guidance on the construction methods necessary to ensure proper performance. Moisture accumulation in roof sheathing can adversely affect the performance and attachment of the roof covering.
While the research cited in the proposal includes some detail about this construction, many details are not adequately covered. This public comment is an attempt to address some of the issues. Approval of these assemblies will require greater level of detail in order for code officials to review proposed designs, and for product evaluation entities to review products intended to serve as vapor diffusion ports.

Proponent : Mike Fischer, representing The Center for the Polyurethanes Industry (mfischer@kellencompany.com) requests Disapprove.

Commenter's Reason: The Center for the Polyurethanes Industry (CPI) of the American Chemistry Council (ACC) asks for disapproval of RB 327. Despite assurances by the proponents of the change, there is a lack of data to support the code change proposal. The limited field data collected as part of the Building America project is insufficient to support such sweeping changes to the code. The research project is limited and lacks representative samples of homes in Climate Zones 1-3 and the existing field data does not demonstrate long-term performance (5-10 years).
Moisture monitoring/modeling for the purpose of estimating mold growth potential is insufficient to demonstrate long-term performance of the assembly. In moist climates, assemblies can be subject to repeated wet-dry cycles that can lead to premature failure even if moisture conditions for mold growth are not present.
The use of air-permeable insulation in hot-humid areas of Climate Zone 3 has led to construction failures. Research demonstrates that the proposed design does not work in Climate Zone 5. The original proposal limited the use of the proposed assembly to dry climates only in Climate Zone 3. The data might support the limited use of this method in Climate Zones 1 and 2, and in the dry climate areas in Climate Zone 3, but that option was not considered. CPI remains concerned that the research has not addressed the long-term durability of the proposed design, so even a limited approval should be met with skepticism until more in-depth field research has been collected.

In addition to the building science concerns about the proposal, it contains a number of technical flaws. The most glaring omission from the proposal is a definition for "air-permeable" insulation. The lack of a definition that clearly describes what materials are appropriate, without any regard for ANY product or material properties other than air permeance (even undefined) opens the door to a host of other materials that could meet an air permeance measure but would not be appropriate for use in this type of installation. The issues surrounding the lack of technical detail for the proposed "vapor diffusion port" are of serious concern as well.

CPI believes that more research is needed to validate the proposed design, and that any code proposal to bring such a sweeping change to the current requirements must be appropriately scoped with well-defined terms. The proposal must consider not just what the proponents intend to allow, but the likely misapplication that could result from the lack of detail within the code text itself.

Our construction history is littered with failures that have led to serious durability and performance issues; before we ask code officials to approve "vapor diffusion ports" to safeguard this type of construction we need to get it right. Using the alternate means and methods path, with some evaluation entity reviewing proposed designs, is a more appropriate way to bring these kinds of systems to the code. It is neccesary to establish some track record of success based on the inevitable trial-and-error necessary to help ensure that what can be published in a research paper can also be constructed in the field without a building scientist on hand to design and supervise the installation.

Proponent : Randy Nicklas, Icynene, Corporation, representing Icynene, Corporation (rnicklas@icynene.com) requests Disapprove.

Commenter's Reason: Request Disapproval of Committee Action to Approve as Submitted for the folowing reason statement.
RB 327-16 Public Comment

Commenter: Randy Nicklas, Codes Specialist/Senior Engineer Icynene, Corp, Columbia, SC

General Comments:

This proposal seems to rely heavily on research done in warm dry climates, not warm moist climates. Any research done in warm moist climates has been for less than 2 years and has not fully explored the risks associated with practical implementation of the proposed changes by untrained workers including roofers, insulators, general laborers and ventilation installers.

There is a very significant risk that concealed moisture problems will develop compromising the performance of roof sheathing and framing elements.

Other Specific Concerns:

There are numerous serious problems with this code proposal for unvented attics, which would make it very difficult for the roofer to comply with and for the code official to inspect in the new Section 5.2.

1. Section 5.2 adds a major departure from the current code requirements that only allows fibrous insulation to be placed in direct contact with roof sheathing (i.e. air permeable insulation only) in dry climates (Zones 2B & 3B) and only with tile roof assemblies. Such a change should require compelling and comprehensive research evidence given the inherent risks.

2. The proposed code change relies heavily on the use of a device that the proponent calls a vapor diffusion port (VDP). The definition given for said VDP is very unclear: It does not list any criteria for this device beyond a vapor permeance of equal to or greater than 20 perms. There is no information given regarding not compromising the air barrier of the assembly, air permeance of the device, durability requirements, compatibility with surrounding materials (glues, adhesives, roofing materials, etc.) or exactly how to construct it in the code language. Does it in fact need it's own ICC separate evaluation criteria?

Tyvek house wrap, for example, meets the specification and is shown in the supporting references. However, according the manufacturer, Dupont, "Tyvek is not designed or recommended to be used on roofs or horizontal planes. In addition, there have been no tests conducted by Dupont for durability and/or effectiveness as it relates to roof construction." Additionally, on Tyvek's website it states "Tyvek is not recommended for any use other than in behind exterior walls".

3. Section 5.2.1 refers to an "approved" Vapor Diffusion Port. There is no definition of what constitutes an "approved" VDP, or who approves the VDP. This leaves code enforcement nearly impossible because who enforces the approval is unclear.

4. Buildability: As a past roofer, I am concerned about the VDP, as the ridge area detailing is critical to prevent the roof from leaking. Roofing professionals have no idea what a VDP is, how it is to be installed and sealed and will have a very difficult time ensuring that the interface between the VDP and the roof drainage plane does not leak. Perhaps a DPDS (Drip Pan and Drainage Plane) is needed as Plan B.

Roofing professionals will have difficulty purchasing an approved VDP. Most retailers have never heard of the term.

Note: Field construction of the VDP, without careful supervision of the installation to ensure that the interface between the VDP and the roof's drainage plane, will be difficult at best. The pictures in the referenced documents show a 4/12 pitch, a "walker". However, think 8/12, 12/12, and 15/12 pitches, which are difficult to stand on, let alone, to build the "mini" roof as shown in the referenced papers and to ensure it does not leak.

The language defining the VDP assumes that there will be one VDP. However, many roofs have multiple roof levels, wings, and dormers that complicate the design. A single VDP will likely be inadequate to protect all roof elements and levels. There is little consideration given to these practical realities that are commonly encountered in roof construction. Are additional ports required? The proposal seems to infer that they are required, but it gives no guidance on where and how to locate them.

5. Section 5.2.4

"The VDP shall serve as an air barrier between the attic and the exterior of the building". VDP suppliers, if and when they step up to provide product, will supply an air barrier element alone. Code provisions are needed to indicate how such a product is to be integrated into the air barrier system. Where is the rest of the air barrier in the roof assembly, as required in Table N1102.4.1.1 (R402.4.1.1), which states that:

"A continuous air barrier shall be installed in the building thermal envelope". The insulation installation criteria states that "Air permeable insulation shall not be used as a sealing material". Fiberglass and cellulose are very air permeable, essentially filters for air exiting the building. So again, I ask the question, where is the continuous air barrier in section 5.2? There isn't one. Without it, warm humid air will enter the attic space and come into contact with the cold roof sheathing, condense and create the perfect environment for mold growth.

6. VDP - Vapor Permeance, Air Permeability, and Long Term Durability: What effect will the long term exposure of heat, solvents, adhesives and sealants have on the performance of the VDP? This is not known because the products for this application have not been developed and commercialized. No long term testing has been done to demonstrate that the membrane maintains the perm rating of 20 perms or greater, does not become brittle, and has sufficient resistance to moisture, winds and ultraviolet exposure. Is there a maintenance requirement for a VDP to ensure it functions as designed?

7. In the reason section: It states that "the same technical team and the same technical rigor that supported the original code changes for the unvented attic are in support of this proposal".

Not true: I was a member of the team and spoke in support of the original proposal. I am not in support of this proposal for the above reasons; it is too risky!

RB 327-16 has not been clearly thought out, and is not ready for inclusion in the IRC.

Note: G188, which is essentially the same code proposal, was disapproved in the 2018 IBC committee and final action hearings.

RB328-16
IRC: R806.5.

Proposed Change as Submitted

Proponent : Joseph Lstiburek, representing self (joe@buildingscience.com)

2015 International Residential Code

Revise as follows:

R806.5 Unvented attic and unvented enclosed rafter assemblies. Unvented *attics* and unvented enclosed roof framing assemblies created by ceilings that are applied directly to the underside of the roof framing members and structural roof sheathing applied directly to the top of the roof framing members/rafters, shall be permitted where all the following conditions are met:

1. The unvented *attic* space is completely within the *building thermal envelope*.
2. No interior Class I vapor retarders are installed on the ceiling side (*attic* floor) of the unvented *attic* assembly or on the ceiling side of the unvented enclosed roof framing assembly.
3. Where wood shingles or shakes are used, a minimum $^{1}/_{4}$-inch (6.4 mm) vented airspace separates the shingles or shakes and the roofing underlayment above the structural sheathing.
4. In Climate Zones 5, 6, 7 and 8, any *air-impermeable insulation* shall be a Class II vapor retarder, or shall have a Class II vapor retarder coating or covering in direct contact with the underside of the insulation.
5. Insulation shall be located in accordance with the following:
   - 5.1. Item 5.1.1, 5.1.2, 5.1.3 or 5.1.4 shall be met, depending on the air permeability of the insulation directly under the structural roof sheathing. For Climate Zones 1, 2 and 3 item 5.1.5 shall also be met.
     - 5.1.1. Where only *air-impermeable insulation* is provided, it shall be applied in direct contact with the underside of the structural roof sheathing.
     - 5.1.2. Where *air-permeable insulation* is provided inside the building thermal envelope, it shall be installed in accordance with Section 5.1. In addition to the *air-permeable insulation* installed directly below the structural sheathing, rigid board or sheet insulation shall be installed directly above the structural roof sheathing in accordance with the *R*-values in Table R806.5 for condensation control.
     - 5.1.3. Where both *air-impermeable* and *air-permeable insulation* are provided, the *air-impermeable insulation* shall be applied in direct contact with the underside of the structural roof sheathing in accordance with Item 5.1.1 and shall be in accordance with the *R*-values in Table R806.5 for condensation control. The *air-permeable insulation* shall be installed directly under the *air-impermeable insulation*.
     - 5.1.4. Alternatively, sufficient rigid board or sheet insulation shall be installed directly above the structural roof sheathing to maintain the monthly average temperature of the underside of the structural roof sheathing above 45°F (7°C). For calculation purposes, an interior air temperature of 68°F (20°C) is assumed and the exterior air temperature is assumed to be the monthly average outside air temperature of the three coldest months.
     - 5.1.5. In climate zones 1, 2 and 3 air shall be supplied at a flow rate ≥50 CFM (23.6 L/s) per 1000 ft^2 of ceiling. The air shall be supplied from ductwork providing supply air to the occupiable space when the conditioning system is operating. Alternatively, the air shall be supplied by a supply fan when the conditioning system is operating.
   - 5.2. Where preformed insulation board is used as the air-impermeable insulation layer, it shall be sealed at the perimeter of each individual sheet interior surface to form a continuous layer.

Reason: This code change is necessary to address a problem with moisture accumulation in unvented conditioned attics in Climate Zones 1, 2 and 3. One of the original rationales for unvented conditioned attics is that they addressed the issue of leaky ductwork located in attic spaces. By constructing an unvented attic this duct leakage no longer occurred to the outside. This was a huge benefit to the building. One of the other benefits of this duct leakage was that it now provided conditioning to the attic space - removing moisture via the air conditioning process. The leaky ductwork in essence supplied conditioned air to the attic space. Over the past decade the installation of ductwork has significantly improved to the point where typical ductwork does not leak enough to provide incidental conditioning to the unvented attic space. A source of dedicated supply air must be provided to unvented attics to remove moisture to compensate for the improvement to duct tightness.
For a more detailed discussion of the technical justification for this proposed code change see Cool Hand Luke Meets Attics (http://buildingscience.com/documents/insights/bsi-077-cool-hand-luke-meets-attics).

Cost Impact: Will increase the cost of construction

This will result in a minor cost increase - the cost of one supply duct (typically 4 to 6 inch in diameter) or supply register in an existing supply duct. A return duct or return register is not necessary. Incidental leakage of the attic ceiling provides a sufficient return path.

RB328-16 :
R806.5-
LSTIBUREK

Public Hearing Results

Committee Action: **Disapproved**

Committee Reason: The committee felt this is a great idea but more study needs to be done to investigate some of the alternates presented by the opponents, The criteria for the supply fan needs to be prescribed.

Assembly Action: **None**

Individual Consideration Agenda

Public Comment 1:

Proponent : Joseph Lstiburek (joe@buildingscience.com) requests Approve as Modified by this Public Comment.

Modify as Follows:

2015 International Residential Code

R806.5 Unvented attic and unvented enclosed rafter assemblies. Unvented *attics* and unvented enclosed roof framing assemblies created by ceilings that are applied directly to the underside of the roof framing members and structural roof sheathing applied directly to the top of the roof framing members/rafters, shall be permitted where all the following conditions are met:

1. The unvented *attic* space is completely within the *building thermal envelope*.
2. No interior Class I vapor retarders are installed on the ceiling side (*attic* floor) of the unvented *attic* assembly or on the ceiling side of the unvented enclosed roof framing assembly.
3. Where wood shingles or shakes are used, a minimum $^{1}/_{4}$-inch (6.4 mm) vented airspace separates the shingles or shakes and the roofing underlayment above the structural sheathing.
4. In Climate Zones 5, 6, 7 and 8, any *air-impermeable insulation* shall be a Class II vapor retarder, or shall have a Class II vapor retarder coating or covering in direct contact with the underside of the insulation.
5. Insulation shall be located in accordance with the following:
    - 5.1. Item 5.1.1, 5.1.2, 5.1.3 or 5.1.4 shall be met, depending on the air permeability of the insulation directly under the structural roof sheathing. For Climate Zones 1, 2 and 3 item 5.1.5 shall also be met.
        - 5.1.1. Where only *air-impermeable insulation* is provided, it shall be applied in direct contact with the underside of the structural roof sheathing.
        - 5.1.2. Where *air-permeable insulation* is provided inside the building thermal envelope, it shall be installed in accordance with Section 5.1. In addition to the *air-permeable insulation* installed directly below the structural sheathing, rigid board or sheet insulation shall be installed directly above the structural roof sheathing in accordance with the *R*-values in Table R806.5 for condensation control.
        - 5.1.3. Where both *air-impermeable* and *air-permeable insulation* are provided, the *air-impermeable insulation* shall be applied in direct contact with the underside of the structural roof sheathing in accordance with Item 5.1.1 and shall be in accordance with the *R*-values in Table R806.5 for condensation control. The *air-permeable insulation* shall be installed directly under the *air-impermeable insulation*.
        - 5.1.4. Alternatively, sufficient rigid board or sheet insulation shall be installed directly above the structural roof sheathing to maintain the monthly average temperature of the underside of the structural roof sheathing above 45°F (7°C). For calculation purposes, an interior air temperature of 68°F (20°C) is assumed and the exterior air temperature is assumed to be the monthly average outside air temperature of the three coldest months.
        - 5.1.5. In climate zones 1, 2 and 3 air shall be supplied at a flow rate ≥50 CFM (23.6 L/s) per 1000 ft^2 of ceiling. The air shall be supplied from ductwork providing supply air to the occupiable space when the conditioning system is operating. ~~Alternatively,~~ Alternativelyone of the ~~air~~ following shall ~~be supplied by a supply fan when the conditioning system is operating.~~ occur:
            - 5.1.5.1. air shall be supplied to the attic by a fan blowing air from the occupiable space into the

5.1.5.2. ~~transfer~~ attic air from the occupiable space shall be provided by a fan exhausting attic air to the ourside, or

5.1.5.3. mechanical dehumidification shall be provided to the unvented attic air space.

5.2. Where preformed insulation board is used as the air-impermeable insulation layer, it shall be sealed at the perimeter of each individual sheet interior surface to form a continuous layer.

Commenter's Reason: This addresses committee concerns regarding criteria for the supply air and provides alternatives that have been shown to work.

Proponent : Mike Fischer, Kellen, representing The Center for the Polyurethanes Industry (mfischer@kellencompany.com) requests Disapprove.

Commenter's Reason: The Center for the Polyurethanes Industry (CPI) requests support for the committee recommendation for disapproval of RB328.

The proposal has been characterized as "a solution in search of a problem". Changes to the code require a two-part threshold be met: Identify a problem, Validate a solution. In this case, neither of these criteria have been met.

The proponent fails to identify the magnitude of the problem with moisture accumulation in unvented attics that justifies a significant change to the current and well-understood code provision. The article cited by the proponent – Cool Hand Luke Meets Attics – describes conditions and building practices that could lead to a potential issue in some unvented attics. However, the article does not point to an actual problem or quantitative evidence that would justify the need to change current code language. Experience informs us that existing construction practices do not lead to a statistically significant number of unvented attics- under the current code provisions for air-impermeable insulation- that experience issues with moisture accumulation.

The conditions that may give rise to potential moisture accumulation in unvented attics appear to be limited to a narrow set of circumstances: sealed ducts in the attic space. However, the proponent is proposing to change the code requirements for all unvented attics. Unvented attics add value by bringing ducts inside the building thermal envelope and capturing the loss of conditioned air through duct leakage. Furthermore, in homes that do not have ducts in the attic space, unvented attics are not widely used. Therefore, we are unlikely to see the potential issue described by the proponent in these homes.

The article cited by the proponent theorizes this problem may relate to the use of certain foam products. While we are not familiar with wide-spread moisture accumulation issues in unvented attics constructed with a variety of insulation materials, why does the code proposal attempt to change the requirements for all unvented attics if the issue is limited to material selection? We highlight this issue to underscore the fact that the code proposal is overly broad and presents an unnecessary change to the way unvented attics have been constructed in many thousands of homes.

The proponent fails to present evidence or field testing that the code change proposal effectively addresses the potential for moisture accumulations in unvented attics. The code change proposal provides a specific flow rate and ductwork design to address the theorized moisture accumulation. However, the proponent fails to provide testing that demonstrates this solution addresses the potential issue. Is the greater than 50 CFM per 1000 square feet of ceiling flow rate sufficient? What about 25 CFM? The absence of testing makes it impossible to determine if the solution is an effective one for addressing the potential issue. Moreover, experience tells us that unvented attics with normal duct leakage do not experience moisture accumulation issues.

The proponent also fails to consider other possible solutions to address the potential issue of moisture accumulation in certain unvented attics. If placing sealed ducts in an unvented attic does create the potential for moisture accumulation, why seal the ducts in the first place? Would an exhaust fan at the roof deck be a solution for addressing the potential for moisture accumulation under the facts presented by the proponent? What about using a heat recovery ventilator or energy recovery ventilator to address this potential issue? More efficient, and potentially less-costly, solutions may be available to address the proponent's theory.

The proponent's concept may also change the fire safety characteristics of the unvented attic space by introducing an active exchange of conditioned air between the attic and living spaces. The proponent does not present evidence or testing that the code change proposal maintains the existing level of fire safety. Can the existing level of fire safety be maintained without significant, and potentially costly, changes to time-tested constructed practices? Without the evidence of an actual problem related to moisture accumulation in unvented attics across a significant number of homes, we encourage the Committee to disapprove the proposal. Jeopardizing fire safety is not worth addressing the proponent's theory that sealing ductwork may lead to a potential issue in certain unvented attics.

RB328-16

RB331-16
IRC: R807.1.

Proposed Change as Submitted

Proponent : Richard Davidson, representing Self

2015 International Residential Code

Revise as follows:

R807.1 Attic access. Buildings with ~~combustible~~ concealed ceiling or roof construction shall have an *attic* access opening to *attic* areas that have a vertical height of 30 inches (762 mm) or greater over an area of not less than 30 square feet (2.8 m^2). The vertical height shall be measured from the top of the ceiling framing members to the underside of the roof framing members.

The rough-framed opening shall be not less than 22 inches by 30 inches (559 mm by 762 mm) ~~and shall be located in a hallway or other readily accessible location~~. Where located in a wall, the opening shall be not less than 22 inches wide by 30 inches high (559 mm wide by 762 mm high). Where the access is located in a ceiling, minimum unobstructed headroom in the *attic* space shall be 30 inches (762 mm) at some point above the access measured vertically from the bottom of ceiling framing members. See Section M1305.1.3 for access requirements where mechanical *equipment* is located in *attics*.

Reason: The ICC Commentary for the IRC states: "*The requirement for an attic access is predicated on the likelihood that during the life of the structure, access to an attic space for repair of piping, electrical and mechanical systems will be required."*
If this is true, then language in the section that states *"Buildings with combustible ceilings or roof construction shall have...." is misleading because attics of non-combustible construction are just as likely to have piping, electrical and mechanical systems.* ***The IBC makes no mention of combustibility in its attic access requirements.*** And, the mechanical code (M1305.1.3) already requires access for equipment in an attic. It is less obvious why access is need for piping or electrical systems that would never need service. So the purpose of the access is universally poorly understood.

If it is believed that access should be provided regardless of equipment, a more realistic approach would be to require access to any attic that contains concealed spaces and without regard to construction materials used. Furthermore, direction on the location of the access needs to be more useful. Currently the code says the access must be "in a hallway or other readily accessible location". There are a number of problems with this language. It leads one to believe that the access must be interior to the dwelling. Why couldn't the access be via a gable end hatch, through a knee wall, or via a garage attic? Eliminating the access within the dwelling solves a problem involving heat loss and air infiltration and can also make replacement of equipment less intrusive.

The IBC provides no direction on where the access must be. It only requires that there be one and stipulates the size.

To alleviate these issues, this proposal would require an access for all attics in dwellings that have concealed spaces and would not dictate where the access must be ***consistent with the IBC***.

It should also be remembered that an access can be provided even if the code does not require one or where there is none and that creating an opening in a ceiling or wall that does not contain an opening is a very simple operation.

Cost Impact: Will not increase the cost of construction
This proposal is largely a reduction in regulation and should have no impact on construction costs.

RB331-16 :
R807.1-
DAVIDSON10886

Public Hearing Results

Committee Action: **Disapproved**

Committee Reason: The committee felt the location of the attic access is important and should remain in a reasonable location as prescribed.

Assembly Action: **None**

Individual Consideration Agenda

Public Comment 1:

Proponent : Paul Coats, PE CBO, representing American Wood Council (pcoats@awc.org) requests Approve as Modified by this Public Comment.

Modify as Follows:

2015 International Residential Code

R807.1 Attic access. Buildings with concealed ceiling or roof construction shall have an *attic* access opening to *attic* areas that have a vertical height of 30 inches (762 mm) or greater over an area of not less than 30 square feet (2.8 m^2). The vertical height shall be measured from the top of the ceiling framing members to the underside of the roof framing members.

The rough-framed opening shall be not less than 22 inches by 30 inches (559 mm by 762 mm). Where located in a wall, the opening shall be not less than 22 inches wide by 30 inches high (559 mm wide by 762 mm high) <u>and shall be located in a hallway or other readily accessible location</u>. Where the access is located in a ceiling, minimum unobstructed headroom in the *attic* space shall be 30 inches (762 mm) at some point above the access measured vertically from the bottom of ceiling framing members. See Section M1305.1.3 for access requirements where mechanical *equipment* is located in *attics*.

Commenter's Reason: This public comment retains the portion of the original code change which replaces "combustible" with "concealed" in the first sentence. As stated by the proponent, access for the repair of piping, electrical, and mechanical systems is needed regardless of the framing material, and this portion of the change achieves improved consistency with the IBC. This public comment retains the current code language requiring the access be located in a hallway or other readily accessible location.

RB331-16

RB336-16
IRC: R202, R902.4.

Proposed Change as Submitted

Proponent : Joseph Cain, SunEdison, representing Solar Energy Industries Association (SEIA) (joecainpe@aol.com)

2015 International Residential Code

Add new definition as follows:

SECTION R202 DEFINITIONS

DEFINITIONS

PHOTOVOLTAIC PANEL, TYPE-RATED. A *photovoltaic panel* tested for spread-of-flame and burning brand, and assigned a type rating according to UL 1703.

Revise as follows:

R902.4 Rooftop-mounted photovoltaic panels and modules. Rooftop-mounted photovoltaic panels and modules installed on or above the roof covering shall be tested, listed and identified with a fire classification in accordance with UL 1703. Class A, B or C photovoltaic panels and modules shall be installed in jurisdictions designated by law as requiring their use or where the edge of the roof is less than 3 feet (914 mm) from a lot line.

Exception: *Photovoltaic panel systems* with *listed* and *type-rated photovoltaic panels* installed on noncombustible mounting systems over *roof coverings* of clay or concrete tile installed in conformance with Section R905.3.

Reason: In the UL 1703 PV system test protocol, the test method is referred to as "first item ignited; second item ignited." The steep-slope testing is conducted using a roof deck with asphalt shingles, which serve as the "first item ignited." The PV system is exposed to the combined thermal stress from the burning asphalt shingles plus the primary ignition source. The asphalt shingle roof deck is used in base case tests and in tests including the PV mounting system with type-rated modules installed. The UL fire classification test protocol does not include any method for fire testing of PV panel systems installed over noncombustible roof coverings such as metal or tile roofs. It is not possible to ignite a noncombustible roof covering, so the "first item ignited; second item ignited" protocol cannot be used. Rather than providing credit for the added safety of installing a roof covering that will not ignite, the current standard requires that PV systems be tested on the ignitable base-case asphalt shingle roof in order to justify installation on a noncombustible roof covering. These systems must be tested on an unrelated combustible roof covering in order to justify installation on a safer, noncombustible roof covering.
In the installation of a photovoltaic panel system over a clay or concrete tile roof covering, the only fuel above the roof covering is the encapsulent (usually EVA), and in framed modules the backsheet of the PV panel/module and moulding between the glass and aluminum frame. Owing to the added safety of PV systems installed on noncombustible roof coverings, plus the existence of only minimal fuel, this proposal seeks an exemption from fire classification testing for these systems for which no fire test protocol exists.

A new definition is introduced to clarify that Type-Rated Photovoltaic Panels are those that have been subjected to spread-of-flame and burning brand tests and assigned a type rating in accordance with UL 1703.

Fire-tested and listed PV modules installed on noncombustible mounting systems over noncombustible Class A roof coverings create very little risk of fire propagation owing to flying embers. These systems provide a high level of safety owing to near-absence of fuel, and should not be subjected to testing on unrelated combustible roof coverings in order to allow their installation.

Cost Impact: Will not increase the cost of construction
This proposal will not increase the cost of construction, as it will reduce the amount of testing required for a safer installation of photovoltaic panel systems.

RB336-16 :
R902.4-
CAIN11071

Public Hearing Results

Committee Action: **Disapproved**

Committee Reason: The testing should be done under the same conditions as the prescribed installation. Also, the language in the proposal needs some rework such as reference to the correct sections.

Assembly Action: **None**

Individual Consideration Agenda

Public Comment 1:

Proponent : Joseph Cain, representing Solar Energy Industries Association (SEIA) (JoeCainPE@gmail.com) requests Approve as Modified by this Public Comment.

Modify as Follows:

2015 International Residential Code

R902.4 Rooftop-mounted photovoltaic panels and modules. Rooftop-mounted photovoltaic panels and modules installed on or above the roof covering shall be tested, listed and identified with a fire classification in accordance with UL 1703. Class A, B or C photovoltaic panels and modules shall be installed in jurisdictions designated by law as requiring their use or where the edge of the roof is less than 3 feet (914 mm) from a lot line.

Exception: *Photovoltaic panel systems* with *listed* and *type-rated photovoltaic panels* of Type 1, Type 2, or Type 3 installed on ~~noncombustible~~ mounting systems constructed of noncombustible materials over *roof coverings* of clay or concrete tile installed in conformance with ~~Section~~ Sections R902.1 and R905.3.

Commenter's Reason: Fire testing performed at Architectural Testing, Inc., an Intertek company (Intertek-ATI) on March 9 and 10, 2016 demonstrated the performance of photovoltaic systems on two representative Class A roof assemblies -- metal sheets and clay roof tile. The testing was not an exhaustive test matrix. The tests were confirmatory and conditions were selected to represent worst-case conditions. For each experiment, additional fuel (asphalt shingle) was added to the test deck to enable the "first item ignited; second item ignited" test scenario. This additional fuel will not be present on the roof of a real building, so the experiments are conservative.
Conditions were selected that maximized the effects of the fire in the tests required by UL 1703, such as:

- Panel Type 1, which contains the largest amount of fuel and the least amount of glass compared to Types 2 and 3
- Slope of 5/12
- 5-inch gap between the roof covering and the underside of the panel
- Steel panels with a thickness at the minimum limit of its available range, 29 gauge (0.013 inches, 0.33 mm)
- Adding shingles to the front of the spread of flame test to ensure that the flame reached the panel (fuel added to the test that does not exist for the real on-the-roof installation).

Under these conditions, all the specimens passed the tests.

In response to testimony and Committee comments, reference to Section R902.1 has been included in addition to Section R905.3.

Committee comments (under companion proposal RB337-16) include: "The committee likes these proposal [sic] and hopes the proponents reworks and brings them back as s [sic] public comment.

http://www.seia.org/research-resources/technical-documents-solar-codes-standards (http://www.seia.org/research-resources/technical-documents-solar-codes-standards)

RB336-16

RB337-16
IRC: R202, R902.1, R902.4.

Proposed Change as Submitted

Proponent : Joseph Cain, SunEdison, representing Solar Energy Industries Association (SEIA) (joecainpe@aol.com)

2015 International Residential Code

SECTION R202 DEFINITIONS

DEFINITIONS

PHOTOVOLTAIC PANEL, TYPE-RATED. A *photovoltaic panel* tested for spread-of-flame and burning brand, and assigned a type rating according to UL 1703.

R902.1 Roofing covering materials. Roofs shall be covered with materials as set forth in Sections R904 and R905. Class A, B or C roofing shall be installed in jurisdictions designated by law as requiring their use or where the edge of the roof is less than 3 feet (914 mm) from a lot line. Class A, B and C roofing required by this section to be listed shall be tested in accordance with UL 790 or ASTM E 108.

- **Exceptions:**
    1. Class A roof assemblies include those with coverings of brick, masonry and exposed concrete roof deck.
    2. Class A roof assemblies include ferrous or copper shingles or sheets, metal sheets and shingles, clay or concrete roof tile, or slate installed on noncombustible decks.
    3. Class A roof assemblies include minimum 16 ounces per square foot copper sheets installed over combustible decks.
    4. Class A roof assemblies include slate installed over underlayment over combustible decks.

Revise as follows:

R902.4 Rooftop-mounted photovoltaic panels and modules. Rooftop-mounted photovoltaic panels and modules installed on or above the roof covering shall be tested, listed and identified with a fire classification in accordance with UL 1703. Class A, B or C photovoltaic panels and modules shall be installed in jurisdictions designated by law as requiring their use or where the edge of the roof is less than 3 feet (914 mm) from a lot line.

Exception: *Photovoltaic panel systems* with *listed* and *type-rated photovoltaic panels* installed on noncombustible mounting systems over those specific Class A *roof assemblies* in Exceptions 1 through 4 of Section R902.1.

Reason: In the UL 1703 PV system test protocol, the test method is referred to as "first item ignited; second item ignited." The steep-slope testing is conducted using a roof deck with "marginal Class A" asphalt shingles, which serve as the "first item ignited." The PV system is exposed to the combined thermal stress from the burning asphalt shingles plus the primary ignition source. The asphalt shingle roof deck is used in base case tests and in tests including the PV mounting system with type-rated modules installed. The UL fire classification test protocol does not include any method for fire testing of PV panel systems installed over noncombustible roof coverings such as metal or tile roofs. It is not possible to ignite a noncombustible roof covering, so the "first item ignited; second item ignited" protocol cannot be used. Rather than providing credit for the added safety of installing a roof covering that will not ignite, the current standard requires that PV systems be tested on the ignitable base-case asphalt shingle roof in order to justify installation on a noncombustible roof covering. These systems must be tested on an unrelated combustible roof covering in order to justify installation on a safer, noncombustible roof covering.
In the installation of a photovoltaic panel system over a Class A roof assembly with a noncombustible roof covering, the only fuel above the roof covering is the encapsulent (usually EVA), and in framed modules the backsheet of the PV panel/module and moulding between the glass and aluminum frame. Owing to the added safety of PV systems installed on noncombustible roof coverings, plus the existence of only minimal fuel, this proposal seeks an exemption from fire classification testing for these systems for which no fire test protocol exists.

A new definition is introduced to clarify that Type-Rated Photovoltaic Panels are those that have been subjected to spread-of-flame and burning brand tests and assigned a type rating in accordance with UL 1703.

Fire-tested and listed PV modules installed on noncombustible mounting systems over noncombustible Class A roof assemblies create very little risk of fire propagation owing to flying embers. These systems provide a high level of safety owing to near-absence of fuel, and should not be subjected to testing on unrelated combustible roof coverings in order to allow their installation.

Cost Impact: Will not increase the cost of construction
This proposal will not increase the cost of construction, as it will reduce the amount of testing required for a safer installation of

photovoltaic panel systems.

RB337-16 : R902.4-CAIN12643

Public Hearing Results

Committee Action: **Disapproved**

Committee Reason: The committee disapproved this proposal based on the previous action on RB336-16. The committee likes these proposal and hopes the proponents reworks and brings them back as s public comment.

Assembly Action: **None**

Individual Consideration Agenda

Public Comment 1:

Proponent : Joseph Cain, representing Solar Energy Industries Association (SEIA) (JoeCainPE@gmail.com) requests Approve as Modified by this Public Comment.

Modify as Follows:

2015 International Residential Code

R902.4 Rooftop-mounted photovoltaic panels and modules. Rooftop-mounted photovoltaic panels and modules installed on or above the roof covering shall be tested, listed and identified with a fire classification in accordance with UL 1703. Class A, B or C photovoltaic panels and modules shall be installed in jurisdictions designated by law as requiring their use or where the edge of the roof is less than 3 feet (914 mm) from a lot line.

Exception: *Photovoltaic panel systems* with *listed* and *type-rated photovoltaic panels* of Type 1, Type 2, or Type 3 installed on ~~noncombustible~~ mounting systems constructed of noncombustible materials over those specific Class A *roof assemblies* in Exceptions 1 through 4 of Section R902.1.

Commenter's Reason: Fire testing performed at Architectural Testing, Inc., an Intertek company (Intertek-ATI) on March 9 and 10, 2016 demonstrated the performance of photovoltaic systems on two representative Class A roof assemblies -- metal sheets and clay roof tile. The testing was not an exhaustive test matrix. The tests were confirmatory and conditions were selected to represent worst-case conditions. For each experiment, additional fuel (asphalt shingle) was added to the test deck to enable the "first item ignited; second item ignited" test scenario. This additional fuel will not be present on the roof of a real building, so the experiments are conservative.
Conditions were selected that maximized the effects of the fire in the tests required by UL 1703, such as:

- Panel Type 1, which contains the largest amount of fuel and the least amount of glass compared to Types 2 and 3
- Slope of 5/12
- 5-inch gap between the roof covering and the underside of the panel
- Steel panels with a thickness at the minimum limit of its available range, 29 gauge (0.013 inches, 0.33 mm)
- Adding shingles to the front of the spread of flame test to ensure that the flame reached the panel (fuel added to the test that does not exist for the real on-the-roof installation).

Under these conditions, all the specimens passed the tests.

Committee comments include: "The committee likes these proposal [sic] and hopes the proponents reworks and brings them back as s [sic] public comment."

http://www.seia.org/research-resources/technical-documents-solar-codes-standards (http://www.seia.org/research-resources/technical-documents-solar-codes-standards)

Public Comment 2:

Proponent : Vincent Sagan, Thomas Associates, representing Metal Building Manufacturers Association (vsagan@mbma.com) requests Approve as Modified by this Public Comment.

Modify as Follows:

2015 International Residential Code

R902.4 Rooftop-mounted photovoltaic panels and modules. Rooftop-mounted photovoltaic panels and modules installed on or above the roof covering shall be tested, listed and identified with a fire classification in accordance with UL 1703. Class A, B or C photovoltaic panels and modules shall be installed in jurisdictions designated by law as requiring their use or where the edge of the roof is less than 3 feet (914 mm) from a lot line.

Exception: *Photovoltaic panel systems* with *listed* and *type-rated photovoltaic panels*of Type 1, Type 2, or Type 3 installed on ~~noncombustible~~ mounting systems constructed of *noncombustible materials* over ~~those specific~~ metal sheets and clay roof tile Class A *roof assemblies* in ~~Exceptions 1 through 4~~ Exception 2 of Section R902.1.

Commenter's Reason: Fire testing performed at Architectural Testing, Inc., an Intertek company (Intertek-ATI) on March 9 and 10, 2016 demonstrated the performance of photovoltaic systems on two Class A roof assemblies, metal sheets and clay roof tile. The testing was not an exhaustive test matrix; the tests were confirmatory. However, conditions were selected that maximized the effects of the fire in the tests required by UL 1703, such as:

- Panel Type 1, which contains the largest amount of fuel and the least amount of glass compared to Types 2 and 3
- Slope of 5/12
- 5 inch gap between the roof covering and the underside of the panel
- Steel panels with a thickness at the minimum limit of its available range, 29 gauge (0.013 inches, 0.33 mm).
- Adding shingles to the front of the spread of flame test to ensure that the flame reached the panel.

Under these conditions, all the specimens passed the tests.

The exceptions claimed in RB337-16 cannot be justified by the testing. Fire testing was performed on two Class A roof assemblies, metal sheets and clay roof tile. There were no other roof assemblies tested. The modification of this code change proposal will result in a focused exception for these two Class A roof assemblies installed on noncombustible decks. Fire testing is still required for the photovoltaic panels and the mounting systems. Fire testing according to UL 1703 is still required for all other roof assemblies.

The report on the Intertek-ATI testing referenced in this reason statement is accessible at the following link:

http://taisvo.com/emailattachments/vsagan/TestReport-f6398.01-121-24-r0.pdf
(http://taisvo.com/emailattachments/vsagan/TestReport-f6398.01-121-24-r0.pdf)

RB337-16

RB345-16
IRC: R905.15.3.

Proposed Change as Submitted

Proponent : James Kirby, representing Roof Coating Manufacturers Association, representing Center for Environmental Innovation in Roofing (jkirby@kellencompany.com)

2015 International Residential Code

R905.15.3 Application. Liquid-applied roofing shall be installed in accordance with this chapter and the manufacturer's *approved* installation instructions.

Reason: The proposal adds necessary language so that the application of roof coatings follows manufacturer's approved installation instructions.

Cost Impact: Will not increase the cost of construction
The proposal adds clarity and does not change code requirements.

RB345-16 :
R905.15.3-
KIRBY13265

Public Hearing Results

Committee Action: **Approved as Submitted**

Committee Reason: The committee approved this proposal based on the proponents published reason statement and prior action on S29-16, Part II.

Assembly Action: **None**

Individual Consideration Agenda

Public Comment 1:

Proponent : James Kirby, representing Roof Coating Manufacturers Association (jameskirby47@icloud.com) requests Approve as Modified by this Public Comment.

Modify as Follows:

2015 International Residential Code

R905.15.3 Application. Liquid-applied roofing shall be installed in accordance with this chapter and the manufacturer's ~~*approved*~~installation instructions.

Commenter's Reason: The word "approved" was found to be controversial in subsequent proposals even thought this proposal was Approved As Submitted. In order to be consistent in the 2018 codes, this public comment removes the word "approved" so there is no confusion by code officials regarding manufacturer's installation instructions for liquid-applied roofing in the IRC.

Proponent : Rebecca Baker, representing Jefferson County, CO / Colorado Chapter of the International Code Council (bbaker@co.jefferson.co.us) requests Disapprove.

Commenter's Reason: The added language is redundant. Section R903.1 states that all roof assemblies shall be designed and installed in accordance with the *approved* manufacturer's instructions. Additionally, to maintain consisteny with the IBC, this needs to be disapproved.

RB345-16

RB361-16

IRC: , R202 (New), R327 (New), R327.1 (New), R327.2 (New), R327.3 (New), R327.4 (New), R327.4.1 (New), R327.4.2 (New), R327.4.3 (New), R327.4.4 (New), R327.4.4.1 (New), R327.4.4.2 (New), R327.4.4.3 (New), R327.5 (New), R327.5.1 (New), R327.5.2 (New), R327.5.3 (New), R327.5.4 (New), R327.5.5 (New), R327.5.6 (New), R327.5.7 (New), R327.5.8 (New), R327.6 (New), R327.7 (New), R327.8 (New), R327.8.1 (New), R327.8.2 (New), R327.8.3 (New), R327.8.4 (New), R327.8.5 (New), R327.8.6 (New), R327.8.7 (New), R327.8.8 (New), R327.8.9 (New).

Proposed Change as Submitted

Proponent : Matthew Koch, representing Myself (matt@southernradon.com)

2015 International Residential Code

Add new definition as follows:

SECTION R202 ACTIVE SOIL DEPRESSURIZATION (ASD) SYSTEM.

A system using a fan-powered vent drawing air from beneath a slab or membrane designed to achieve lower air pressure under the sub-slab or sub-membrane relative to air pressure above the slab or membrane.

SECTION R202 DRAIN TILE LOOP.

A continuous length of drain tile or perforated pipe extending around all or part of the internal or external perimeter of a basement or crawl space footing.

SECTION R202 RADON GAS.

A naturally-occurring, radioactive, cancer-causing gas that is not detectable by human senses. As a gas, it can move readily through particles of soil and rock and can accumulate under the slabs and foundations of homes where it can easily enter into the living space through construction cracks and openings.

SECTION R202 ROUGH-IN.

The installation of all parts amaterials of anactive soil depressurization system that must be competed prior to the placement of concrete, prior to the closure of building cavities and prior to the installation of finish materials. Such parts and materials include gas permeable layers, soil gas retarders, plenums, membranes, piping, suction inlets, discharge outlets and wiring.

SECTION R202 SOIL GAS RETARDER.

A continuous membrane of 6-mil (0.15 mm) polyethylene or other equivalent material used to retard the flow of soil gases into a building.

SECTION R202 SUB-MEMBRANE DEPRESSURIZATION SYSTEM.

An active soil depressurization system designed to achieve lower sub-membrane air pressure relative to crawl space air pressure by use of a fan powred vent drawing air from beneath the soil gas retarder membrane.

SECTION R202 SUB-SLAB DEPRESSURIZATION SYSTEM.

An active soil depressurization system designed to achieve lower sub-slab air pressure relative to indoor air pressure by use of a fan-powered vent drawing air from beneath the floor slab.

Add new text as follows:

SECTION R327 RADON CONTROL METHODS

R327.1 General. Where provided, the design and installation of radon control methods for new construction shall comply with one of the following:

1. Section R327, or
2. State or local requirements, where applicable.

R327.2 Intent. Radon control mehtods are intended to reduce radon entry and prepare the building for post-construction radon mitigation.

R327.3 Active soil depressurization system rough-in. A rough-in is required for all foundations and combination foundation types, including crawlspace, basement, slab on grade, and slab on grade garage located below a living area as shown in Figure R327.3

FIGURE R327
Foundation Types

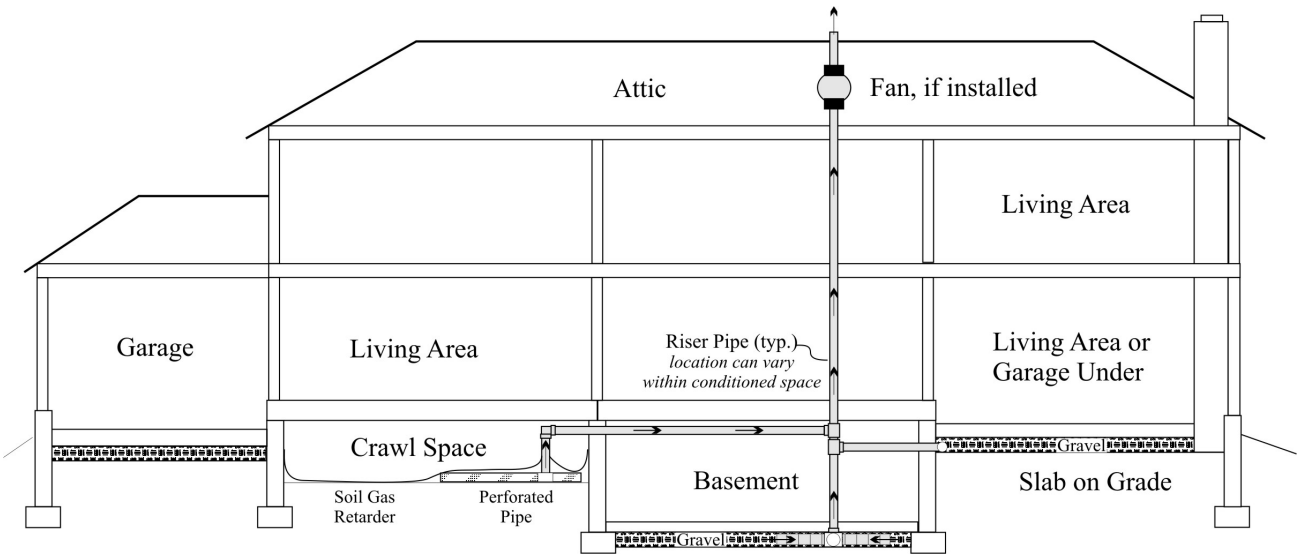

R327.4 Sub-slab depressurization system rough-in. In basement or slab-on-grade buildings, the components of a sub-slab depressurization system shall be installed during construction in accordance with Sections R327.4.1 through R327.4 and R327.5 through R327.8.9.

R327.4.1 Gas permeable layer.
To facilitate future installation of an active soil depressurization system, a gas-permeable layer shall be constructed under all concrete slabs and other floor systems that directly contact the ground and are within the walls of the living spaces of the building. The gas-permeable layer shall be designed to allow the lateral flow of soil gases and consist of one of the following:

1. A uniform layer of clean aggregate, not less than 4 inches (102 mm) in depth, shall be placed over the soil. The aggregate shall have a void ratio of not less than 35 percent or a Size Number 4, 5, 56, or 6 as classified by ASTM C33.
2. A uniform layer of native or fill sand, a minimum of 4 inches (102 mm) in depth, overlain by a layer or strips of geotextile drainage matting or loop of perforated pipe. The geotextile drainage matting shall have a cross-sectional area of at least 12 square inches (774 sq mm). The geotextile matting shall be placed not closer than 12 inches (305 mm) to the foundation wall around the interior of the foundation perimeter.
3. A loop of 4 inch (102 mm) nominal or larger size perforated pipe placed in a trench along the perimeter of the foundation, with the trench backfilled with clean aggregate having a void ratio of not less than 35 percent or a size number 4, 5, 56, or 6 as classified by ASTM C33 such that the pipe is surrounded by a not less than 4 inches (102mm) of aggregate on all sides. The pipe shall be placed not closer than 12 inches (305 mm) to the foundation wall around the interior of the foundation perimeter.
4. Other materials, systems or floor designs with demonstrated capability for depressurization across the entire sub-floor area.

R327.4.2 Soil gas retarder. A minimum 6-mil (0.15 mm), or 3-mil (0.075 mm) cross-laminated, polyethylene or equivalent flexible sheeting material shall be placed on top of the gas permeable layer prior to casting the slab or placing the floor assembly. The sheeting shall cover the entire floor area with separate sections of sheeting lapped not less than 12 inches (305 mm). Openings in the sheeting caused by pipe, wire and other penetrations shall be sealed. Punctures or tears in the material shall be sealed or covered with additional sheeting. Where under slab insulation is installed, it shall be placed on top of the sheeting.

R327.4.3 Vent pipe connector.
A 3 inch nominal (76 mm) or larger size ABS, PVC or equivalent gas-tight pipe shall be embedded vertically into the gas permeable layer before the slab is cast. A tee fitting or equivalent method shall be used to secure the pipe opening within the gas permeable layer. Not less than 5 feet (1524 mm) of perforated pipe shall be connected to the two horizontal openings of the tee fitting or the two horizontal openings shall be connected to the interior drain tile system.

Alternatively, the 3 inch nominal (76 mm) size pipe shall connect through a sealed sump cover where the sump communicates directly with the sub-slab aggregate or with it through a drainage system. A flexible rubber coupling connector shall be provided at the sump cover connection to facilitate servicing the sump.

R327.4.4 Sub-membrane depressurization system rough-in.
In buildings with crawl space foundations, the components of a sub-membrane depressurization system shall be installed during construction in accordance with Sections R327.4.4.1 through R327.4.4.3.

Exception: Buildings in which an approved mechanical crawl space ventilation system is installed.

R327.4.4.1 Ventilation.
Crawl spaces shall be provided with vents to the exterior of the building. The minimum net area of ventilation openings shall comply with Section R408.1.

Exception: Outdoor ventilation is not required for conditioned crawl spaces.

R327.4.4.2 Soil gas-membrane.
The soil in crawl spaces shall be covered with a continuous layer of soil gas-membrane complying with ASTM E1745 Class A,

B or C. The membrane shall be lapped not less than 12 inches (305 mm) at joints and shall extend upwards 12 inches (305 mm) and be sealed to all foundation walls enclosing the crawl space area.

R327.4.4.3 Vent pipe connector.
A tee fitting shall be installed beneath the soil gas membrane with not less than 10 feet of perforated pipe connected to the two horizontal openings of such fitting or the two horizontal openings of the tee fitting shall connect to the interior drain tile system. The branch opening of the tee fitting shall be connected to the vent pipe in accordance with Section R327.5.

R327.5 Vent pipe.
A 3 inch (76 mm) nominal size or larger ABS, PVC or equivalent gas-tight pipe shall be extended from the tee fitting up through the building floors and in accordance with Sections R327.5.1 through R327.5.8.

R327.5.1 Vent pipe termination.
The vent pipe shall terminate vertically upward not less than 12 inches (305 mm) above the roof in a location not less than 10 feet (3048 mm) away from any window or other opening into the conditioned spaces of the building that is less than 2 feet (610 mm) below the exhaust point. The vent pipe shall terminate not less than 10 feet (3048 mm) from windows or other opening in adjoining or adjacent buildings.

R327.5.2 Vent pipe drainage.
Components of the radon vent pipe system shall be installed to provide condensation drainage to the ground beneath the slab or soil gas retarder.

R327.5.3 Vent pipe installation.
Components of the radon vent pipe system shall be installed in accordance with Section 512 of the International Mechanical Code.

R327.5.4 Vent pipe identification.
Exposed and visible interior radon vent pipes shall be identified with not less than one label on each floor level and in crawlspaces and accessible attics. The label shall read: "Radon Vent."

R327.5.5 Combination foundations.
Combination basement and crawl space and combination slab-on grade and crawl space foundations shall have separate radon vent pipes installed in each type of foundation area. Vent pipes shall connect to a single vent that terminates above the roof or each individual vent pipe shall terminate separately above the roof.

R327.5.6 Multiple vent pipes.
In buildings where interior footings or other barriers separate areas of sub-slab aggregate or other gas-permeable material, each area shall be fitted with an individual vent pipe or a pipe loop shall connect such areas below the slab. Vent pipes shall connect to a single vent that terminates above the roof or each individual vent pipe shall terminate separately above the roof.

R327.5.7 Vent pipe accessibility.
Radon vent pipes shall be provided with access in an attic or other area outside the habitable space for the purpose of installing an active soil depressurization system fan.

Exception: Where an approved electrical supply is installed on the roof for future use.

R327.5.8 Provisions for fan.
A cylindrical space having a vertical height of not less than 48 inches (122 cm) and a diameter of not less than 21 inches (53 cm) shall be provided in the location where an active soil depressurization fan would be installed. The active soil depressurization pipe shall be centered in this space. The space provided for the active soil depressurization system fan shall be located in accordance with Section R327.6.

R327.6 Active soil depressurization system fan locations. Active soil depressurization system fans shall be installed outdoors, in attics or in garages that are not beneath conditioned spaces. Active soil depressurization system fans shall not be installed below ground, in conditioned spaces, in occupiable spaces of a building or in any basement, crawlspace or other interior location that is directly beneath a conditioned or occupiable space of a building. Active soil depressurization system fans shall not be installed in any location where pipe positively pressured by the fan would be located inside conditioned or occupiable space.

R327.7 Power source.
To provide for future installation of an active soil depressurization system fan, an electrical circuit that terminates in an approved junction box shall be installed in the attic or other anticipated location of active soil depressurization system fans.

R327.8 Entry routes.
Potential radon entry routes shall be closed in accordance with Sections R327.8.1 through R327.8.9.

R327.8.1 Floor openings.
Openings around bathtubs, showers, water closets, pipes, wires and other objects that penetrate concrete slabs or floor assemblies shall be sealed in a permanent manner.

R327.8.2 Concrete joints.
Control joints, isolation joints, construction joints and other joints in concrete slabs and between slabs and foundation walls shall be sealed with a caulk or sealant. Gaps and joints shall be cleared of loose material and filled with polyurethane caulk complying with ASTM C920 class 25 or higher or equivalent method applied in accordance with the manufacturer's instructions.

R327.8.3 Foundation and condensation drains.
Foundation and HVAC condensate drains routed below the soil gas retarder area shall be isolated through a plumbing trap or routed through non-perforated pipe to outdoors.

R327.8.4 Sumps.

Sump pits open to soil or serving as the termination point for sub-slab or exterior drain tile loops shall be covered with a gasketed or otherwise sealed lid. Sumps used as the suction point in a sub-slab depressurization system shall have a lid designed to accommodate the vent pipe. Sumps used as a floor drain shall have a lid equipped with a trapped inlet.

R327.8.5 Foundation walls.
Hollow block masonry foundation walls shall be constructed with a continuous course of solid masonry, one course of masonry grouted solid, or a solid concrete beam at or above finished ground surface to prevent passage of air from the interior of the wall into the living space. Where a brick veneer or other masonry ledge is installed, the course immediately below that ledge shall be sealed. Joints, cracks and other openings around penetrations of both exterior and interior surfaces of masonry block and wood foundation walls below the ground surface shall be filled with polyurethane caulk complying with ASTM C920 class 25 or higher, or equivalent method applied in accordance with the manufacturer's recommendations. Penetrations of concrete walls shall be sealed.

R327.8.6 Damp proofing.
The exterior surfaces of portions of concrete and masonry block walls below the ground surface shall be damp proofed in accordance with Section R406.

R327.8.7 Air handling units.
Air-handling units in crawl spaces shall be sealed to prevent air from being drawn into the unit.

R327.8.8 Crawlspace floors.
Openings around penetrations through floors above crawl spaces shall be caulked or otherwise filled to prevent air leakage.
Exception: Air sealing is not required for floors above conditioned crawl spaces complying with Section R408.3.2.2.

R327.8.9 Crawlspace access.
Access doors and other openings or penetrations between basements and adjoining crawl spaces shall be closed, gasketed or otherwise filled to prevent air leakage.
Exception: Air sealing is not required for conditioned crawl spaces conforming to Section R408.3.2.2.

Reason: The inclusion of this section into the IRC reflects the intent of the International Residentail Code of providing minimum requirements to ensure the public health and safety. This proposed change does not require Radon Control Methods, rather it creates a uniform method of design, installation and inspection when Radon Conrrol Methods are used during new construction.

Currently RRNC is being provided in new construction in most jurisdictions without a means for the building inspector to evaluate the work performed. Four states do have statewide RRNC Codes, but local jurisdictions must adopt them. Nineteen states do not have statewide RRNC codes, but do have some local jurisdictions that have RRNC codes. Seven states do have statewide RRNC Codes that apply to designated jurisdictions. Twenty States and three Districts/Territories do not have any statewide or local jurisdictions that have RRNC Codes.

The Federal government has recently published the Federal Radon Action Plan (FRAP), a collaborative effort led by the Environmental Protection Agency, Department of Health and Human Services, Department of Agriculture, Department of Defense, Department of Energy, Department of Housing and Urban Development (HUD), Department of Interior, Department of Veterans Affairs and the General Services Administration. One of the goals of the FRAP is to increase to 100% the number of new single family homes constructed with RRNC by 2020. As part of HUD's commitment to healthy housing, they now require RRNC in 100% of multi-family communities constructed or renovated in Zone 1 counties that have HUD backed mortgages and currently support changes in radon requirements for all Federal Housing Finance Agency (FHFA) single family mortgages (this is 90% of all mortgages)

According to the NAHB, 1.5 million homes were constructed with RRNC between 1990 and 2006. This number is likely twice that today, yet only a small percentage of them have been inspected to ensure they are properly constructed.

According to the NAHB, more than half of the NAHB members incorporate green practices into development, design and construction of new homes.

There is precedent in the IRC for the inclusion of the requirements of the proposal. Many chapters in the Code pertain to elements of construction that are not required in all homes, but are present in order to provide a means of design, installation and inspection (Chapter 10 Chimneys and Fireplaces, Chapter 18 Chimneys and Vents, Chapter 19 Special Fuel-burning Equipment, Chapter 21 Hydronic Piping, Chapter 22 Special Piping and Storage Systems, Chapter 23 Solar Systems, Chapter 24 Fuel Gas).

Bibliography: List of state and local RRNC Codes: http://www.epa.gov/radon/building-codes-radon-resistant-new-construction-rrnc

Federal Radon Action Plan: http://www.epa.gov/sites/production/files/2014-08/documents/Federal_Radon_Action_Plan.pdf

HUD Multi-family radon policy: http://portal.hud.gov/hudportal/documents/huddoc?id=13-03hsgn.pdf

References to NAHB RRNC statistics: http://www.epa.gov/radon/radon-resistant-new-construction-home-buyers

Lawsuit against builder for incorrectly installed RRNC: (http://www.journal-news.net/page/content.detail/id/511633.html (http://www.journal-news.net/page/content.detail/id/511633.html)) and (http://www.lehighvalleylive.com/warren-county/index.ssf?/base/news-3/1287115540270780.xml&coll=3 (http://www.lehighvalleylive.com/warren-county/index.ssf?/base/news-3/1287115540270780.xml&coll=3))

Cost Impact: Will not increase the cost of construction
This proposal does not require Radon Control Systems to be installed, however it will apply a minimum standard to those that are being installed. If systems are currently being installed correctly, the only impact of the proposal is the local code official will now have a means of inspecting the installed system. If systems are currently being installed incorrectly, the proposal may actually reduce cost to a builder from potential corrective action or legal financial liability created by systems being incorrectly installed.

RB361-16 : R325 (NEW)-KOCH12318

Public Hearing Results

Committee Action: **Disapproved**

Committee Reason: This proposal brings requirements into the code that are not needed everywhere. Where there are high radon areas, states adopt the radon provisions in the appendix. If a homeowner does want a system installed, they can hire a competent contractor. Moreover, there are EPA regulations to monitor and ensure that the system is installed correctly. Radon requirements are already contained in the appendix. In states such as Pennsylvania, local jurisdictions adopt the radon appendix in the areas where there are radon issues. We should not mandate that the building official inspect something that is not required by the code when we don't even know that there is a hazard.

Assembly Motion: **As Submitted**
Online Vote Results: **Failed**
Support: 31.91% (75) Oppose: 68.09% (160)
Assembly Action: **None**

Individual Consideration Agenda

Public Comment 1:

Proponent : Jani Palmer (palmer.janise@epa.gov) requests Approve as Modified by this Public Comment.

Replace Proposal as Follows:

2015 International Residential Code

BOOK PART III—Building Planning and Construction

SECTION 409 RADON REDUCTION

R409.1 Applicability. This section shall apply to new dwellings located in Zone 1 as determined by Figure AF101. Such dwellings shall have soil-gas exhaust systems as described by this section.

R409.2 Soil-gas barriers and base course. A base course in accordance with Section R506.2.2 shall be installed below slabs and foundations. There shall be a continuous gas-permeable base course under each soil-gas retarder that is separated by foundation walls or footings. Between slabs and the base course, damp proofing or water proofing shall be installed in accordance with Section 406. Punctures, tears and gaps around penetrations of the soil-gas retarder shall be repaired or covered with an additional soil-gas retarder. The soil-gas retarder shall be a continuous 6-mil (0.15mm) polyethylene or an approved equivalent.

R409.3 Soil gas collection. There shall be an unobstructed path for soil gas flow between the void space installed in the base course and the vent through the roof. Soil gases below the foundation shall be collected by a perforated pipe with a diameter of not less than 4 inches (10 cm) and not less than 2 feet (0.6 m) in length. Alternately the soil gas collection shall be by approved radon collection mats or an equivalent approved method.

R409.4 Soil gas entry routes. Openings in slabs, soil-gas retarders, and joints such as, but not limited to, plumbing, ground water control systems, soil-gas vent pipes, piping and structural supports, shall be sealed against air leakage at the penetrations. The sealant shall be a polyurethane caulk, expanding foam or other approved method. Foundation walls shall comply with Section AF103.2.3. Sumps shall be sealed in accordance with Section AF103.2.2. Sump pits and sump lids

intended for ground water control shall not be connected to the sub-slab soil-gas exhaust system.

R409.5 Soil gas vent. A gas-tight pipe vent shall extend from the soil gas permeable layer though the roof. The vent pipe size shall not be reduced at any location except where the below-floor end of the vent pipe is connected to a pipe fitting with not less than two horizontal openings that maintain air flow capacity. Exposed and visible interior vent pipes shall be identified with not less than one label reading "Radon Reduction System" on each floor and in habitable attics.

R409.5.1 Vent pipe diameter. The minimum vent pipe diameter shall be as specified in Table R409.5.1.

TABLE R409.5.1
MAXIMUM VENTED FOUNDATION AREA

Maximum area vented	Minimum nominal vent pipe diameter
2,500 ft^2 (232 m^2)	3 inch (7.6 cm)
4,000 ft^2 (372 m^2)	4 inch (10 cm)
Unlimited	6 inch (15.2 cm)

R409.6 Multiple vented areas. In dwellings where interior footings or other barriers separate the soil-gas permeable layer, each area shall be fitted with an individual vent pipe. Vent pipes shall connect to a single vent that terminates above the roof or each individual vent pipe shall terminate separately above the roof.

R409.7 Fan. Each sub-slab soil-gas exhaust system shall include a fan, or dedicated space for the post-construction installation of a fan. The electrical supply for the fan shall be located within six feet (1.8 m) of the fan.

Commenter's Reason: Radon in buildings is the second largest cause of lung cancer, after smoking. In high radon potential zones the building code should treat radon as a health priority. This proposals requires radon limiting construction in the highest radon zone, radon Zone 1.

Construction under the foundation is practical in new residences, but impractical after the residence is built. This proposal requires elements of radon control, such as that under the foundation, in new residences in high radon potential areas. This proposal does not require installation of a radon vent fan, just a place for the fan. If the residence tests high for radon, or the occupants want to install the fan, the residence has a place for the fan and has most of the rest of the radon reduction in place.

Previous radon proposals seemed overly complex. Much of this proposal relies on existing IRC requirements. Elements of Appendix F are also referenced. The result is simple and understandable radon code text.

RB361-16

RB362-16

IRC: , 0, AF101, AF101.1, AF102, AF102.1, AF102.1 (New), AF103, AF103.1, AF103.2, AF103.2 (New), AF103.2.1, AF103.2.2, AF103.2.3, AF103.2.4, AF103.2.5, AF103.2.6, AF103.2.7, AF103.3, AF103.3.1, AF103.3.2, AF103.3.3 (New), AF103.4, AF103.4.1, AF103.4.2, AF103.4.3, AF103.5, AF103.5.1 (New), AF103.5.3 (New), AF103.5.7 (New), AF103.5.8 (New), AF103.6, AF103.6 (New), AF103.7, AF103.7 (New), AF103.8, AF103.8 (New), AF103.8.2 (New), AF103.8.3 (New), AF103.8.8 (New), AF103.9.

Proposed Change as Submitted

Proponent : David Kapturowski, representing American Association of Radon Scientists and Technologists

2015 International Residential Code

Delete and substitute as follows:

APPENDIX F ~~PASSIVE~~ RADON ~~GAS CONTROLS~~ CONTROL METHODS

This appendix contains requirements for new construction in jurisdictions where radon control methods are required. The requirement for radon control ~~Inclusion of this appendix by *jurisdictions*~~ shall be determined by ~~through~~ use of locally available data or by determination of Zone 1 radon designation in Figure AF104 or Table AF104 ~~AF101 amd Table AF101(1)~~.

SECTION AF102 DEFINITIONS

AF102.1 General. For the purpose of these requirements, the terms used shall be defined as follows:

Add new definition as follows:

AF102.1 ACTIVE SOIL DEPRESSURIZATION (ASD) A system using a fan-powered vent drawing air from beneath a slab or membrane designed to achieve lower air pressure under the sub-slab or sub-membrane relative to air pressure above the slab or membrane.

Delete without substitution:

~~DRAIN TILE LOOP.A continuous length of drain tile or perforated pipe extending around all or part of the internal or external perimeter of a *basement* or crawl space footing.~~

Delete and substitute as follows:

AF102.1 RADON GAS. A naturally-occurring, ~~chemically inert,~~ radioactive, cancer-causing gas that is not detectable by human senses. As a gas, it can move readily through particles of soil and rock and can accumulate under the slabs and foundations of homes where it can easily enter into the living space through construction cracks and openings.

Add new definition as follows:

AF102.1 ROUGH-IN The installation of all parts and materials of an ASD system that must be completed prior to the placement of concrete, prior to the closure of building cavities and prior to the installation of finish materials. Such parts and materials include gas permeable layers, soil gas retarders, plenums, membranes, piping, suction inlets, discharge outlets and wiring.

Delete and substitute as follows:

SOIL-GAS-RETARDER.

~~A continuous membrane of 6-mil (0.15 mm) polyethylene used to retard the flow of soil gases into a *dwelling*.~~

A continuous membrane of 6-mil [0.15 mm] polyethylene or other equivalent material used to retard the flow of soil gases into a building.

SUBMEMBRANE DEPRESSURIZATION SYSTEM. ~~A~~ An ASD system designed to achieve lower sub-membrane air pressure relative to crawl space air pressure by use of a fan powered vent drawing air from beneath the soil gas retarder membrane.

SUBSLAB DEPRESSURIZATION SYSTEM ~~(Passive).~~ ~~A~~ An ASD system designed to achieve lower sub-slab air pressure relative to indoor air pressure by use of a fan-powered vent ~~pipe routed through the conditioned space of a building and connecting the subslab area with outdoor air, therby relying on the convectifve flow of air upward in the vent to draw~~ drawing air from beneath the floor slab.

Delete without substitution:

VENT PIPE.

No change to text.

~~**AF102**~~

~~**RADON-RESISTANT CONSTRUCTION DETAILS FOR FOUR FOUNDATION TYPES**~~

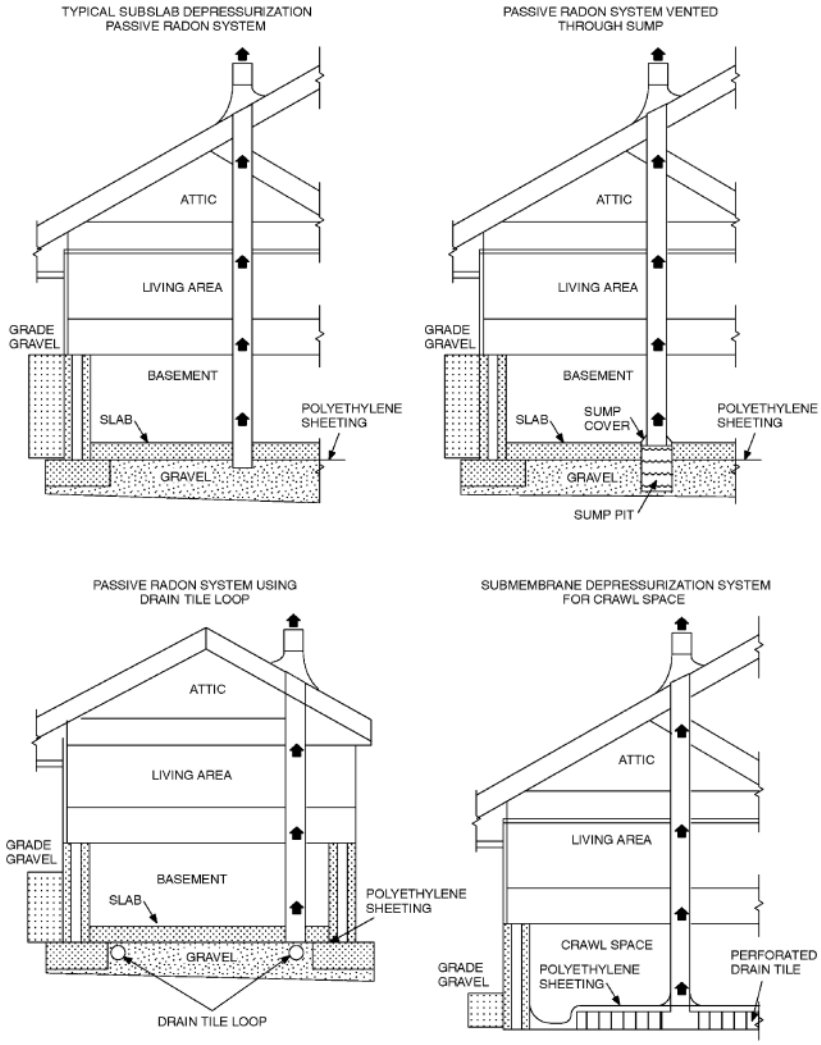

Revise as follows:

SECTION AF103 ~~PASSIVE RADON-RESISTANT SYSTEM~~ REQUIREMENTS

Delete and substitute as follows:

AF103.1 General. ~~The following construction techniques are intended to resist radon entry and prepare the building for post construction radon mitigation, if necessary (see Figure AF102). These techniques are required in areas where designated by the *jurisdiction*.~~ AF103 is required in areas where designated by the jurisdiction and is intended to reduce radon entry and prepare the building for post-construction radon mitigation.

AF103.2 ~~Entry routes~~ ASD System Rough-in. ~~Potential radon entry routes shall be closed in accordance with Sections AF103.2.1 through AF103.2.8.~~
A rough-in is required for all foundations and combination foundation types, including crawlspace, basement, slab on grade, and slab on grade garage located below a living area as shown in Figure AF103.2

FIGURE AF103.2
FOUNDATION TYPES

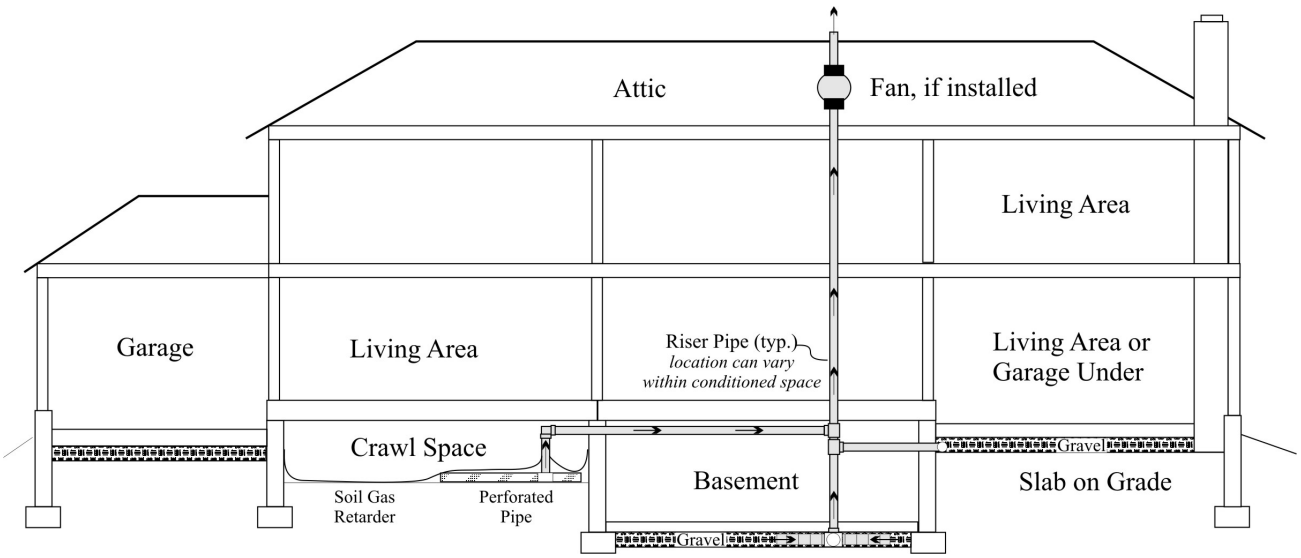

~~**AF103.6**~~ **AF103.3** ~~**Passive**~~ **Sub-slab depressurization system rough-in.** In *basement* or slab-on-grade buildings, the ~~following~~ components of a ~~passive~~ sub-slab depressurization system shall be installed during construction in accordance with AF103.3.1 through AF103.3 and AF103.5 through AF108.9.

~~**AF103.2**~~ **AF103.3.1** ~~**Subfloor preparation**~~ **Gas permeable layer.** To facilitate future installation of an ASD system, a gas-permeable layer shall be constructed ~~A layer of gas permeable material shall be placed~~ under all concrete slabs and other floor systems that directly contact the ground and are within the walls of the living spaces of the building ~~to facilitate future installation of a subslab depressurization system, if needed~~.

The gas-permeable layer shall be designed to allow the lateral flow of soil gases and consist of one of the following:

1. A uniform layer of clean aggregate, not less than 4 inches [102 mm] ~~thick~~ in depth, shall be placed over the soil. The aggregate shall have a void ratio of not less than 35 percent or a Size Number 4, 5, 56, or 6 as classified by ASTM C33 ~~consist of material that will pass through a 2 inch (51 mm) sieve and be retained by a 1/4-inch (6.4 mm) sieve.~~.
2. A uniform layer of native or fill sand ~~(native or fill)~~, a minimum of 4 inches [102 mm] ~~thick~~ in depth, overlain by a layer or strips of geotextile drainage matting or loop of perforated pipe. The geotextile drainage matting shall have a cross-sectional area of at least 12 square inches [774 sq mm]. The geotextile matting shall be placed no closer than 12 inches [305 mm] to the foundation wall around the interior of the foundation perimeter ~~designed to allow the lateral flow of soil gases~~.
3. A loop of 4 inch [102 mm] nominal or larger size perforated pipe placed in a trench along the perimeter of the foundation, with the trench backfilled with clean aggregate having a void ratio of not less than 35 percent or a Size Number 4, 5, 56, or 6 as classified by ASTM C33 such that the pipe is surrounded by a minimum of 4 inches [102mm] of aggregate on all sides. The pipe shall be placed no closer than 12 inches [305 mm] to the foundation wall around the interior of the foundation perimeter.
4. Other materials, systems or floor designs with demonstrated capability for depressurization across the entire sub-floor area.

~~**AF103.3**~~ **AF103.3.2 Soil gas retarder.** A minimum 6-mil [0.15 mm] (or 3-mil [0.075 mm] cross-laminated) polyethylene or equivalent flexible sheeting material shall be placed on top of the gas permeable layer prior to casting the slab or placing the floor assembly ~~to serve as a soil gas retarder by bridging any cracks that develop in the slab or floor assembly, and to prevent concrete from entering the void spaces in the aggregate base material~~. The sheeting shall cover the entire floor area with separate sections of sheeting lapped not less than 12 inches [305 mm]. Openings in the sheeting caused by pipe, wire and other penetrations shall be sealed. ~~The sheeting shall fit closely around any pipe, wire or other penetrations of the material. All~~ Punctures or tears in the material shall be sealed or covered with additional sheeting. Where under slab insulation is installed, it shall be placed on top of the sheeting.

Add new text as follows:

AF103.3.3 Vent pipe connector. A 3 inch nominal [76 mm] or larger size ABS, PVC or equivalent gas-tight pipe shall be embedded vertically into the gas permeable layer before the slab is cast. A tee fitting or equivalent method shall be used to secure the pipe opening within the gas permeable layer. Not less than 5 feet [1524 mm] of perforated pipe shall be connected to the two horizontal openings of the tee fitting or the two horizontal openings shall be connected to the interior drain tile system.

Alternatively, the 3 inch nominal [76 mm] size pipe shall connect through a sealed sump cover where the sump communicates directly with the sub-slab aggregate or communicates with it through a drainage system. A flexible rubber coupling connector shall be provided at the sump cover connection to facilitate servicing the sump.

Delete and substitute as follows:

~~**AF103.5**~~ **AF103.4** ~~**Passive**~~ **Sub-membrane depressurization system rough-in.** In buildings with crawl space foundation, the components of a sub-membrane depressurization system shall be installed during construction in accordance with AF103.4.1 through AF103.4.3.

Exception: Buildings in which an approved mechanical crawl space ventilation system is installed.

~~**AF103.5.1**~~ **AF103.4.1 Ventilation.** Crawl spaces shall be provided with vents to the exterior of the building. The minimum net area of ventilation openings shall comply with Section R408.1.

Exception: Outdoor ventilation not required for conditioned crawl spaces.

~~**AF103.5.2**~~ **AF103.4.2 Soil gas membrane**~~**retarder**~~**.** The soil in crawl spaces shall be covered with a continuous layer of soil gas-membrane complying with ASTM E1745 Class A, B or C ~~6 mil (0.15 mm) polyethylene soil gas retarder~~. The membrane ~~ground cover~~ shall be lapped not less than 12 inches [305 mm] at joints and shall extend upwards 12 inches [305 mm] and be sealed to all foundation walls enclosing the crawl space area.

~~**AF103.5.3**~~ **AF103.4.3 Vent pipe connector.** A tee fitting shall be installed beneath the soil gas membrane with not less than 10 feet of perforated pipe connected to the two horizontal openings of such fitting or the two horizontal openings of the tee fitting shall connect to the interior drain tile system. The branch opening of the tee fitting shall be connected to the vent pipe in accordance with section AF103.5. ~~A plumbing tee or other approved connection shall be inserted horizontally beneath the sheeting and connected to a 3- or 4-inch-diameter (76 or 102 mm) fitting with a vertical vent pipe installed through the sheeting. The vent pipe shall be extended up through the building floors, and terminate at least 12 inches (305 mm) above the roof in a location at least 10 feet (3048 mm) away from any window or other opening into the conditioned spaces of the building that is less than 2 feet (610 mm) below the exhaust point, and 10 feet (3048 mm) from any window or other opening in adjoining or adjacent buildings.~~

~~**AF103.6.1**~~ **AF103.5 Vent pipe.** A ~~minimum~~ 3 inch [76 mm] ~~diameter~~ nominal size or larger ABS, PVC or equivalent gas-tight pipe shall be extended from the tee fitting up through the building floors and in accordance with Sections AF103.5.1 through AF103.5.8. ~~embedded vertically into the subslab aggregate or other permeable material before the slab is cast. A "T" fitting or equivalent method shall be used to ensure that the pipe opening remains within the subslab permeable material. Alternatively, the 3-inch (76 mm) pipe shall be inserted directly into an interior perimeter drain tile loop or through a sealed sump cover where the sump is exposed to the subslab aggregate or connected to it through a drainage system.~~

Add new text as follows:

AF103.5.1 Vent pipe termination. The vent pipe shall terminate vertically upward ~~extend up through the building floors, and terminate at least~~not less than 12 inches [305 mm] above the ~~surface of the~~ roof in a location ~~at least~~ not less than 10 feet [3048 mm] away from any window or other opening into the conditioned spaces of the building that is less than 2 feet [610 mm] below the exhaust point ~~and~~. The vent pipe shall terminate not less than 10 feet [3048 mm] from ~~any~~ windows or other opening in adjoining or adjacent buildings.

Delete and substitute as follows:

~~**AF103.7**~~ **AF103.5.2 Vent pipe drainage.** Components of the radon vent pipe system shall be installed to provide ~~positive~~ condensate drainage to the ground beneath the slab or soil-gas-retarder.

Add new text as follows:

AF103.5.3 Vent pipe installation. Components of the radon vent pipe system shall be installed in accordance with Section 512 of the International Mechanical Code.

Delete and substitute as follows:

~~**AF103.9**~~ **AF103.5.4 Vent pipe identification.** Exposed and visible interior vent pipes shall be identified with not less than one *label* on each floor and in crawlspaces and accessible *attics*. The *label* shall read:"Radon Vent ~~Reuction System~~."

~~**AF103.10**~~ **AF103.5.5 Combination foundations.** Combination basement ~~/~~ and crawl space and ~~or~~combination slab-on grade ~~/~~ and crawl space foundations shall have separate radon vent pipes installed in each type of foundation area. ~~Each radon~~ Vent ~~pipe~~ pipes shall connect to a single vent that terminates above the roof or ~~shall be connected to a single vent that~~ each individual vent pipe shall terminate ~~separately~~ above the roof.

~~**AF103.6.2**~~ **AF103.5.6 Multiple vent pipes.** In ~~buildings~~ *dwellings*where interior footings or other barriers separate ~~the~~ areas of subslab aggregate or other gas-permeable material, each area shall be fitted with an individual vent pipe or a pipe loop shall

connect such areas below the slab. Vent pipes shall connect to a single vent that terminates above the roof or each individual vent pipe shall terminate separately above the roof.

~~**AF103.8**~~ **AF103.5.7 Vent pipe accessibility,** Radon vent pipes shall be ~~accessible for future fan installation through~~ provided with access in an attic or other area outside the habitable space for the purpose of installing a ASD fan.

Exception: ~~The radon vent pie need not be accessible in a n attic space~~ Where an approved electrical supply is ~~provided~~ installed on the roof for future use.

Add new text as follows:

AF103.5.8 Provision for ASD fan. A cylindrical space having a vertical height of not less than 48 inches [122 cm] and a diameter of not less than 21 inches [53 cm] shall be provided in the location where an ASD fan would be installed. The ASD pipe shall be centered in this space. The space provided for the ASD fan shall be located in accordance with Section AF103.6.

AF103.6 ASD fan location. ASD fans shall be installed outdoors, in attics or in garages that are not beneath conditioned spaces. ASD fans shall not be installed below ground, in conditioned spaces, in occupiable spaces of a building or in any basement, crawlspace or other interior location that is directly beneath a conditioned or occupiable space of a building. ASD fans shall not be installed in any location where pipe positively pressured by the fan would be located inside conditioned or occupiable space.

~~**AF103.12**~~ **AF103.7 Power source.** To provide for future installation of an ASD fan ~~active submembrane or subslab depressurization system~~, an electrical circuit ~~terminated~~ that terminates in an approved junction box shall be installed ~~during construction~~ in the attic or other anticipated location of ASD ~~vent pipe~~ fans. ~~An electrical supply shall also be accessible in anticipated locations of system failure alarms.~~

~~**AF103.4**~~ **AF103.8 Entry routes.** Potential radon entry routes shall be closed in accordance with Sections AF103.8.1 through AF103.8.9 ~~AF103.4.1 through AF103.4.10~~.

Delete and substitute as follows:

~~**AF103.4.1**~~ **AF103.8.1 Floor openings.** Openings around bathtubs, showers, water closets, pipes, wires and other objects that penetrate concrete slabs or floor assemblies shall be sealed in a permanent manner ~~filled with a polyurethane caulk or equivalent sealant applied in accordance with the manufacturer's recommendations~~.

~~**AF103.4.2**~~ **AF103.8.2 Concrete joints.** Control joints, isolation joints, construction joints and other joints in concrete slabs ~~or~~ and between slabs and foundation walls shall be sealed with a caulk or sealant. Gaps and joints shall be cleared of loose material and filled with polyurethane caulk complying with ASTM C920 class 25 or higher or equivalent method ~~or other elastomeric sealant~~ applied in accordance with the manufacturer's recommendations.

Add new text as follows:

~~**AF103.4.3**~~ **AF103.8.3 Foundation and condensate drains.** Foundation and HVAC condensate drains routed below the soil gas retarder area shall be isolated through a plumbing trap ~~shall be trapped~~ or routed through non-perforated pipe to ~~daylight~~ outdoors.

Delete and substitute as follows:

~~**AF103.4.4**~~ **AF103.8.4 Sumps.** Sump pits open to soil or serving as the termination point for sub-slab or exterior drain tile loops shall be covered with a gasketed or otherwise sealed lid. Sumps used as the suction point in a sub-slab depressurization system shall have a lid designed to accommodate the vent pipe. Sumps used as a floor drain shall have a lid equipped with a trapped inlet.

~~**AF103.4.5**~~ **AF103.8.5 Foundation walls.** Hollow block masonry foundation walls shall be constructed with a continuous course of solid masonry, one course of masonry grouted solid, or a solid concrete beam at or above finished ground surface to prevent passage of air from the interior of the wall into the living space. Where a brick veneer or other masonry ledge is installed, the course immediately below that ledge shall be sealed. Joints, cracks and other openings around penetrations of both exterior and interior surfaces of masonry block and wood foundation walls below the ground surface shall be filled with polyurethane caulk complying with ASTM C920 class 25 or higher, or equivalent method applied in accordance with the manufacturer's recommendations ~~sealant~~. Penetrations of concrete walls shall be ~~filled~~ sealed.

~~**AF103.4.6**~~ **AF103.8.6 Dampproofing.** The exterior surfaces of foundation walls below grade~~portions of concrete and masonry block walls below the ground surface~~ shall be dampproofed in accordance with Section R406.

~~**AF103.4.7**~~ **AF103.8.7 Air-handling units.** Air-handling units in crawl spaces shall be sealed to prevent air from being drawn into the unit.

- ~~**Exception:** Units with gasketed seams or units tha are otheriwise sealed by the manufacturer to prevent leakage.~~

Add new text as follows:

~~**AF103.4.9**~~ **AF103.8.8 Crawl space floors.** Openings around penetrations through floors above crawl spaces shall be caulked or otherwise filled to prevent air leakage.

Exception: Air sealing is not required for floors above conditioned crawl spaces complying with Section R408.3.2.2.

Delete and substitute as follows:

~~**AF103.4.10**~~ **AF103.8.9 Crawl space access.** Access doors and other openings or penetrations between basements and adjoining crawl spaces shall be closed, gasketed or sealed. Access doors and other openings or penetrations between basements and adjoining crawl spaces shall be closed, gasketed or otherwise filled to prevent air leakage.

Exception: Air sealing is not required for conditioned crawl spaces conforming to Section R408.3.2.2.

TABLE ~~AF101~~ AF104 (1)
HIGH RADON-POTENTIAL (ZONE 1) COUNTIES[a]

a. The EPA recommends that this county listing be supplemented with other available State and local data to further understand the radon potential of a Zone 1 area.

FIGURE ~~AF101~~ AF104
EPA MAP OF RADON ZONES

(Existng code figure not shown for clarity)

a. pCi/L standard for picocuries per liter of radon gas. The U.S. Environmental Protection Agency (EPA) recommends that homes that measure 4 pCi/L and greater be mitigated.

The EPA and the U.S. Geological Survey have evaluated the radon potential in the United States and have developed a map of radon zones designed to assist *building officials* in deciding whether radon-resistant features are applicable in new construction.

The map assigns each of the 3,141 counties in the United States to one of three zones based on radon potential. Each zone designation reflects the average short-term radon measurement that can be expected to be measured in a building without the implementation of radon-control methods. The radon zone designation of highest priority is Zone 1. Table ~~AF101~~ AF104 lists the Zone 1 counties illustrated on the map. More detailed information can be obtained from state-specific booklets (EPA-402-R-93-021 through 070) available through State Radon Offices or from EPA Regional Offices.

Delete without substitution:

~~**AF103.4.8 Ducts.** Ductwork passing through or beneath a slab shall be of seamless material unless the air-handling system is designed to maintain continuous positive pressure within such ducting. Joints in such ductwork shall be sealed to prevent air leakage.~~

~~Ductwork located in crawl spaces shall have all seams and joints sealed by closure systems in accordance with Section M1601.4.1.~~

Reference standards type: This reference standard is new to the ICC Code Books
Add new standard(s) as follows:
A review of the standard(s) proposed for inclusion in the code, ASTM E1745-11, Standard Specification for Plastic Vapor Retarders Used in Contact with Soil or Granular Fill under Concrete Slabs, with regard to the ICC criteria for referenced standards (Section 3.6 of CP#28) will be posted on the ICC website on or before April 1, 2015.

Reason: 21,000 Americans die each year from radon-induced lung cancer. The primary source of exposure to radon for the general public is the home. Geographical areas of the highest radon potential in the United States are located in EPA radon zones 1.
The EPA estimates that 1 out of 15 of all homes in the US has elevated indoor radon levels. The incidence of elevated radon may be greater than 7 out of 10 homes in some high radon areas. Appendix F is a voluntary code which can be adopted by local jurisdictions where radon is known to be a problem.

Nonrandomized industry data shows a significant number of homes across the United States have tested high for elevated indoor radon concentrations.

Radon Test Results Data by State

STATE	STATENAME	TOTAL # TESTS	AVG (pCi/L)	% > EPA Action Level of 4 pCi/L

AL	ALABAMA	11,629	3.8	21.9
AK	ALASKA	432	2.2	13.0
AZ	ARIZONA	7,495	2.1	11.9
AR	ARKANSAS	1,243	2.5	13.7
CA	CALIFORNIA	16,960	2.1	9.1
CO	COLORADO	88,346	6.5	49.0
CT	CONNECTICUT	41,292	3.4	23.9
DE	DELAWARE	5,539	2.5	17.4
FL	FLORIDA	40,039	1.8	10.2
GA	GEORGIA	27,222	2.6	18.9
HI	HAWAII	94	0.4	2.1
ID	IDAHO	16,138	7.1	40.4
IL	ILLINOIS	84,366	5.1	41.0
IN	INDIANA	18,031	4.7	37.2
IA	IOWA	96,260	6.2	49.3
KS	KANSAS	34,288	5.2	44.0
KY	KENTUCKY	47,575	7.4	43.6
LA	LOUISIANA	786	0.9	3.1
ME	MAINE	5,494	5.9	38.3
MD	MARYLAND	55,949	5.4	33.4
MA	MASSACHUSETTS	29,850	3.8	25.6
MI	MICHIGAN	164,678	3.4	25.4
MN	MINNESOTA	135,419	4.7	42.2
MS	MISSISSIPPI	700	1.2	5.6
MO	MISSOURI	27,771	4.2	31.6
MT	MONTANA	18,082	7.2	46.3
NE	NEBRASKA	27,481	5.7	51.6
NV	NEVADA	1,952	3.0	19.3
NH	NEW HAMPSHIRE	35,974	5.5	34.0
NJ	NEW JERSEY	41,092	4.3	24.1
NM	NEW MEXICO	8,165	3.9	30.2

NY	NEW YORK	66,713	4.8	23.9
NC	NORTH CAROLINA	79,384	3.8	27.5
ND	NORTH DAKOTA	10,887	6.0	50.5
OH	OHIO	102,352	7.9	49.0
OK	OKLAHOMA	1,356	2.3	9.7
OR	OREGON	13,675	3.5	25.4
PA	PENNSYLVANIA	149,543	8.3	44.3
RI	RHODE ISLAND	8,667	4.2	31.0
SC	SOUTH CAROLINA	38,971	2.7	18.7
SD	SOUTH DAKOTA	4,081	9.8	59.2
TN	TENNESSEE	40,632	4.6	31.8
TX	TEXAS	5,821	2.4	8.7
UT	UTAH	14,636	4.5	33.6
VT	VERMONT	3,231	3.7	23.4
VA	VIRGINIA	62,577	3.5	25.4
WA	WASHINGTON	22,199	7.0	39.3
DC	WASHINGTON DC	6,948	1.6	8.8
WV	WEST VIRGINIA	14,976	6.0	35.0
WI	WISCONSIN	72,694	5.6	41.8
WY	WYOMING	25,090	5.2	39.6
TOTALS		**1,834,775**		

Source: AARST radon industry test data; published 10/29/2012.

Because the proposal includes many edits to the exisiting Appendix F, a Clean Read copy of the proposed new Appendix F is included to assist the reader.

IRC Appendix F (Proposed Changes: Clean Read Text)
Radon Control Methods

Section AF101
SCOPE

AF101.1 General. This appendix contains requirements for new construction in jurisdictions where radon control methods are required. The requirement for radon control shall be determined by use of locally available data or by determination of Zone 1 radon designation in Figure AF104 or Table AF104.

Section AF102

DEFINITIONS

AF102.1 General. For the purpose of these requirements, the terms used shall be defined as follows:

ACTIVE SOIL DEPRESSURIZATION (ASD) SYSTEM. A system using a fan-powered vent drawing air from beneath a slab or membrane designed to achieve lower air pressure under the sub-slab or sub-membrane relative to air pressure above the slab or membrane.

DRAIN TILE LOOP. A continuous length of drain tile or perforated pipe extending around all or part of the internal or external perimeter of a basement or crawl space footing.

RADON GAS. A naturally-occurring, radioactive, cancer-causing gas that is not detectable by human senses. As a gas, it can move readily through particles of soil and rock and can accumulate under the slabs and foundations of homes where it can easily enter into the living space through construction cracks and openings.

ROUGH-IN. The installation of all parts and materials of an ASD system that must be completed prior to the placement of concrete, prior to the closure of building cavities and prior to the installation of finish materials. Such parts and materials include gas permeable layers, soil gas retarders, plenums, membranes, piping, suction inlets, discharge outlets and wiring.

SOIL GAS RETARDER. A continuous membrane of 6-mil [0.15 mm] polyethylene or other equivalent material used to retard the flow of soil gases into a building.

SUB-MEMBRANE DEPRESSURIZATION SYSTEM. An ASD system designed to achieve lower sub-membrane air pressure relative to crawl space air pressure by use of a fan powered vent drawing air from beneath the soil gas retarder membrane.

SUB-SLAB DEPRESSURIZATION SYSTEM. An ASD system designed to achieve lower sub-slab air pressure relative to indoor air pressure by use of a fan-powered vent drawing air from beneath the floor slab.

Section AF103

Section AF103. REQUIREMENTS

AF103.1 General. Section AF103 is required in areas where designated by the jurisdiction and is intended to reduce radon entry and prepare the building for post-construction radon mitigation.

AF103.2 ASD System rough-in. A rough-in is required for all foundations and combination foundation types, including crawlspace, basement, slab on grade, and slab on grade garage located below a living area as shown in Figure AF103.2

FIGURE AF103.2

FOUNDATION TYPES

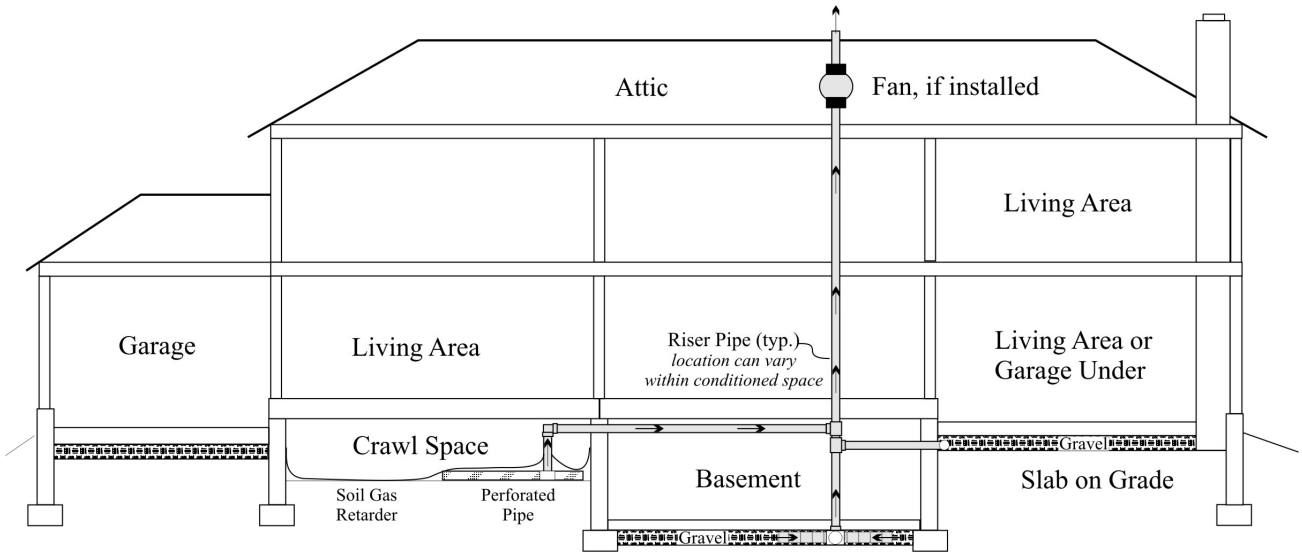

AF103.3 Sub-slab depressurization system rough-in. In basement or slab-on-grade buildings, the components of a sub-slab depressurization system shall be installed during construction in accordance with AF103.3.1 through AF103.3 and AF103.5 through AF108.9.

AF103.3.1 Gas Permeable Layer. To facilitate future installation of an Active Soil Depressurization (ASD) system, a gas-permeable layer shall be constructed under all concrete slabs and other floor systems that directly contact the ground and are within the walls of the living spaces of the building.

The gas-permeable layer shall be designed to allow the lateral flow of soil gases and consist of one of the following:

1. **1**. A uniform layer of clean aggregate, not less than 4 inches [102 mm] in depth, shall be placed over the soil. The aggregate shall have a void ratio of not less than 35 percent or a Size Number 4, 5, 56, or 6 as classified by ASTM C33.

2. A uniform layer of native or fill sand, a minimum of 4 inches [102 mm] in depth, overlain by a layer or strips of geotextile drainage matting or loop of perforated pipe. The geotextile drainage matting shall have a cross-sectional area of at least 12 square inches [774 sq mm]. The geotextile matting shall be placed no closer than 12 inches [305 mm] to the foundation wall around the interior of the foundation perimeter.

3. **3**. A loop of 4 inch [102 mm] nominal or larger size perforated pipe placed in a trench along the perimeter of the foundation, with the trench backfilled with clean aggregate having a void ratio of not less than 35 percent or a Size Number 4, 5, 56, or 6 as classified by ASTM C33 such that the pipe is surrounded by a minimum of 4 inches [102mm] of aggregate on all sides. The pipe shall be placed no closer than 12 inches [305 mm] to the foundation wall around the interior of the foundation perimeter.

4. Other materials, systems or floor designs with demonstrated capability for depressurization across the entire sub-floor area.

AF103.3.2 Soil gas retarder. A minimum 6-mil [0.15 mm] (or 3-mil [0.075 mm] cross-laminated) polyethylene or equivalent flexible sheeting material shall be placed on top of the gas permeable layer prior to casting the slab or placing the floor assembly. The sheeting shall cover the entire floor area with separate sections of sheeting lapped not less than 12 inches [305 mm]. Openings in the sheeting caused by pipe, wire and other penetrations shall be sealed. Punctures or tears in the material shall be sealed or covered with additional sheeting. Where under slab insulation is installed, it shall be placed on top of the sheeting.

AF103.3.3 Vent pipe connector. A 3 inch nominal [76 mm] or larger size ABS, PVC or equivalent gas-tight pipe shall be embedded vertically into the gas permeable layer before the slab is cast. A tee fitting or equivalent method shall be used to secure the pipe opening within the gas permeable layer. Not less than 5 feet [1524 mm] of perforated pipe shall be connected to the two horizontal openings of the tee fitting or the two horizontal openings shall be connected to the interior drain tile system.

Alternatively, the 3 inch nominal [76 mm] size pipe shall connect through a sealed sump cover where the sump communicates directly with the sub-slab aggregate or communicates with it through a drainage system. A flexible rubber coupling connector shall be provided at the sump cover connection to facilitate servicing the sump.

AF103.4 Sub-membrane depressurization system rough-in. In buildings with crawl space foundation, the components of a sub-membrane depressurization system shall be installed during construction in accordance with AF103.4.1 through AF103.4.3.

Exception: Buildings in which an approved mechanical crawl space ventilation system is installed.

AF103.4.1 Ventilation. Crawl spaces shall be provided with vents to the exterior of the building. The minimum net area of ventilation openings shall comply with Section R408.1.

Exception: Outdoor ventilation not required for conditioned crawl spaces.

AF103.4.2 Soil gas-membrane. The soil in crawl spaces shall be covered with a continuous layer of soil gas-membrane complying with ASTM E1745 Class A, B or C. The membrane shall be lapped not less than 12 inches [305 mm] at joints and shall extend upwards 12 inches [305 mm] and be sealed to all foundation walls enclosing the crawl space area.

AF103.4.3 Vent pipe connector. A tee fitting shall be installed beneath the soil gas membrane with not less than 10 feet of perforated pipe connected to the two horizontal openings of such fitting or the two horizontal openings of the tee fitting shall connect to the interior drain tile system. The branch opening of the tee fitting shall be connected to the vent pipe in accordance with section AF103.5.

AF103.5 Vent pipe. A 3 inch [76 mm] nominal size or larger ABS, PVC or equivalent gas-tight pipe shall be extended from the tee fitting up through the building floors and in accordance with Sections AF103.5.1 through AF103.5.8.

AF103.5.1 Vent pipe termination. The vent pipe shall terminate vertically upward not less than 12 inches [305 mm] above the roof in a location not less than 10 feet [3048 mm] away from any window or other opening into the conditioned spaces of the building that is less than 2 feet [610 mm] below the exhaust point. The vent pipe shall terminate not less than 10 feet [3048 mm] from windows or other opening in adjoining or adjacent buildings.

AF103.5.2 Vent pipe drainage. Components of the radon vent pipe system shall be installed to provide condensation drainage to the ground beneath the slab or soil gas retarder.

AF103.5.3 Vent pipe installation. Components of the radon vent pipe system shall be installed in accordance with Section 512 of the International Mechanical Code.

AF103.5.4 Vent pipe identification. Exposed and visible interior radon vent pipes shall be identified with not less than one label on each floor level and in crawlspaces and accessible attics. The label shall read: "Radon Vent."

AF103.5.5 Combination foundations. Combination basement and crawl space and combination slab-on grade and crawl space foundations shall have separate radon vent pipes installed in each type of foundation area. Vent pipes shall connect to a single vent that terminates above the roof or each individual vent pipe shall terminate separately above the roof.

AF103.5.6 Multiple vent pipes. In buildings where interior footings or other barriers separate areas of sub-slab aggregate or other gas-permeable material, each area shall be fitted with an individual vent pipe or a pipe loop shall connect such areas below the slab. Vent pipes shall connect to a single vent that terminates above the roof or each individual vent pipe shall terminate separately above the roof.

AF103.5.7 Vent pipe accessibility. Radon vent pipes shall be provided with access in an attic or other area outside the habitable space for the purpose of installing a ASD fan.

Exception: Where an approved electrical supply is installed on the roof for future use.

AF103.5.8 Provision for ASD fan. A cylindrical space having a vertical height of not less than 48 inches [122 cm] and a diameter of not less than 21 inches [53 cm] shall be provided in the location where an ASD fan would be installed. The ASD pipe shall be centered in this space. The space provided for the ASD fan shall be located in accordance with Section AF103.6.

AF103.6 ASD fan location. ASD fans shall be installed only outdoors, in attics or in garages that are not beneath conditioned spaces. ASD fans shall not be installed below ground, in conditioned spaces, in occupiable spaces of a building or in any basement, crawlspace or other interior location that is directly beneath a conditioned or occupiable space of a building. ASD fans shall not be installed in any location where pipe positively pressured by the fan would be located inside conditioned or occupiable space.

AF103.7 Power source. To provide for future installation of an ASD fan, an electrical circuit which terminates in an approved junction box shall be installed in the attic or other anticipated location of ASD fans.

AF103.8 Entry routes. Potential radon entry routes shall be closed in accordance with Sections AF103.8.1 through AF103.8.9.

AF103.8.1 Floor openings. Openings around bathtubs, showers, water closets, pipes, wires and other objects that penetrate concrete slabs or floor assemblies shall be sealed in a permanent manner.

AF103.8.2 Concrete joints. Control joints, isolation joints, construction joints and other joints in concrete slabs and between slabs and foundation walls shall be sealed with a caulk or sealant. Gaps and joints shall be cleared of loose material and filled with polyurethane caulk complying with ASTM C920 class 25 or higher or equivalent method applied in accordance with the manufacturer's recommendations.

AF103.8.3 Foundation and condensate drains. Foundation and HVAC condensate drains routed below the soil gas retarder area shall be isolated through a plumbing trap or routed through non-perforated pipe to outdoors.

AF103.8.4 Sumps. Sump pits open to soil or serving as the termination point for sub-slab or exterior drain tile loops shall be covered with a gasketed or otherwise sealed lid. Sumps used as the suction point in a sub-slab depressurization system shall have a lid designed to accommodate the vent pipe. Sumps used as a floor drain shall have a lid equipped with a trapped inlet.

AF103.8.5 Foundation walls. Hollow block masonry foundation walls shall be constructed with a continuous course of solid masonry, one course of masonry grouted solid, or a solid concrete beam at or above finished ground surface to prevent passage of air from the interior of the wall into the living space. Where a brick veneer or other masonry ledge is installed, the course immediately below that ledge shall be sealed. Joints, cracks and other openings around penetrations of both exterior and interior surfaces of masonry block and wood foundation walls below the ground surface shall be filled with polyurethane caulk complying with ASTM C920 class 25 or higher, or equivalent method applied in accordance with the manufacturer's recommendations. Penetrations of concrete walls shall be sealed.

AF103.8.6 Damp proofing. The exterior surfaces of portions of concrete and masonry block walls below the ground surface shall be damp proofed in accordance with Section R406.

AF103.8.7 Air-handling units. Air-handling units in crawl spaces shall be sealed to prevent air from being drawn into the unit.

AF103.8.8 Crawl space floors. Openings around penetrations through floors above crawl spaces shall be caulked or otherwise filled to prevent air leakage.

Exception: Air sealing is not required for floors above conditioned crawl spaces complying with Section R408.3.2.2.

AF103.8.9 Crawl space access. Access doors and other openings or penetrations between basements and adjoining crawl spaces shall be closed, gasketed or otherwise filled to prevent air leakage.

Exception: Air sealing not required for conditioned crawl spaces conforming to Section R408.3.2.2.

Section AF104

Figure AF104

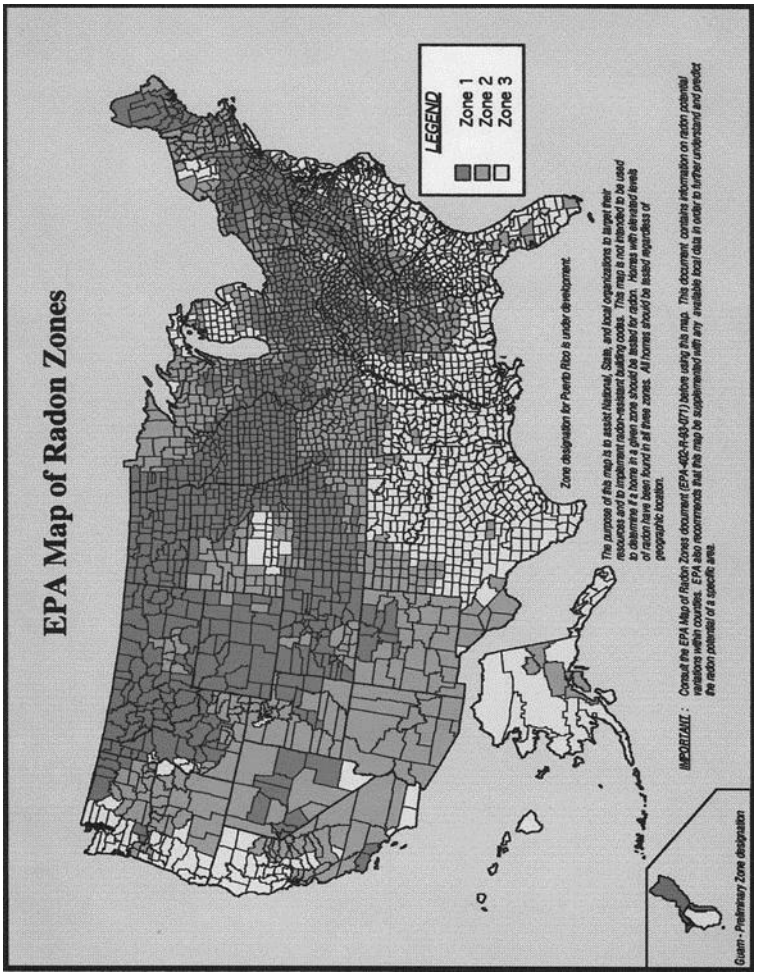

TABLE AF104

Cost Impact: Will not increase the cost of construction
Appendix F is a voluntary standard and will not impact the cost of construction unless the local jurisdiction has decided that the additional $300-$400 in cost is justified by the prevalence of radon in their area and thereby adopts this code chapter.

Analysis: A review of the standard(s) proposed for inclusion in the code, ASTM E1745-11, with regard to the ICC criteria for referenced standards (Section 3.6 of CP#28) will be posted on the ICC website on or before April 1, 2015.

RB362-16 :
APPENDIX F-
KAPTUROWSKI11937

Public Hearing Results

Committee Action: **Disapproved**

Committee Reason: An active radon mitigation system can be very expensive. You have to test after you put the passive system

in. The language should be correlated with the IRC as opposed to other documents.

Assembly Action: **None**

Individual Consideration Agenda

Public Comment 1:

Proponent : David Kapturowski, representing American Association of Radon Scientists and Technologists (dave@spruce.com) requests Approve as Modified by this Public Comment.

Modify as Follows:

2015 International Residential Code

APPENDIX F RADON CONTROL METHODS

AF101.1 General. This appendix contains requirements for ~~new construction in jurisdictions where~~ radon control methods ~~are required~~ for any dwelling where installed. ~~The~~ A Zone 1 requirement for radon control shall be determined by ~~use of locally available data or by determination of~~ the Zone 1 radon designation in Figure AF104 or Table AF104. Where a state or local jurisdiction has published radon potential data, such data shall supersed Figure AF104 or Table AF104.

SECTION AF102 DEFINITIONS

AF102.1 General. For the purpose of these requirements, the terms used shall be defined as follows:

~~**AF102.1 ACTIVE SOIL DEPRESSURIZATION (ASD)** A system using a fan-powered vent drawing air from beneath a slab or membrane designed to achieve lower air pressure under the sub-slab or sub-membrane relative to air pressure above the slab or membrane.~~

AF102.1 RADON GAS. ~~A naturally-occurring~~ The element Rn-222, which is a radioactive, colorless, odorless, tasteless cancer-causing gas that ~~is not detectable by human senses. As~~ occurs naturally as a ~~gas, it can move readily through particles~~ decay product of ~~soil and rock and can accumulate under the slabs and foundations of homes where it can easily enter into the living space through construction cracks and openings~~ radium.

AF102.1 RADON ROUGH-IN The installation of all parts and materials of ~~an ASD~~ submembrane or subslab depressurization system ~~that must be completed prior to the placement of concrete, prior to the closure of building cavities and prior to the installation of finish materials.~~ including ~~Such parts and materials include~~ gas permeable layers, soil gas retarders, plenums, membranes, piping, suction inlets, discharge outlets and wiring.

SOIL-GAS-RETARDER.

A continuous membrane of 6-mil [0.15 mm] polyethylene or other equivalent material used to retard the flow of soil gases into a building.

SUBMEMBRANE DEPRESSURIZATION SYSTEM.

~~An ASD system~~

System designed to achieve lower sub-membrane air pressure relative to crawl space air pressure by use of a fan powered vent drawing air from beneath the soil gas retarder membrane.

SUBSLAB DEPRESSURIZATION SYSTEM

~~An ASD system~~ System designed to achieve lower sub-slab ~~air pressure relative to indoor~~ air pressure by use of a fan-powered vent drawing air from beneath the floor slab.

SECTION AF103 REQUIREMENTS

AF103.1 General. AF103 is required in areas where designated by the jurisdiction and is intended to reduce radon entry and prepare the building for post-construction radon mitigation.

AF103.2 ~~ASD System~~ Radon Rough-in. A rough-in is required for all ~~foundations and combination~~ foundation types, including crawlspace, basement, slab on grade, and slab on grade garage located below a living area as shown in Figure AF103.2 . The rough-in shall be installed prior to the pouring of concrete slabs, closure of building cavities and installation of finish materials.

FIGURE AF103.2
FOUNDATION TYPES

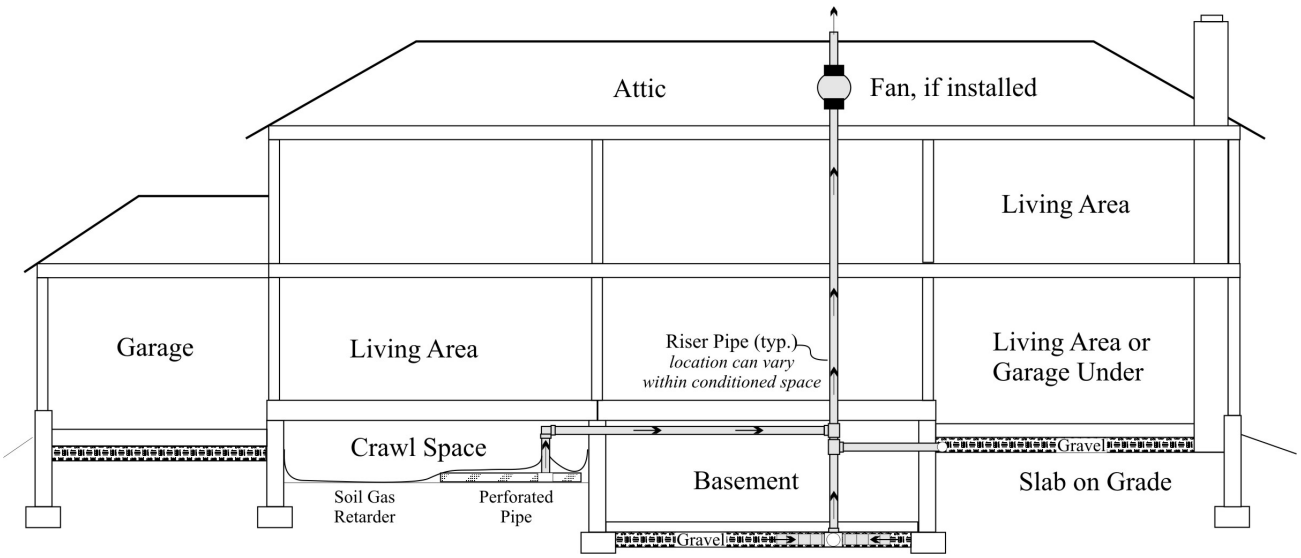

AF103.3 Sub-slab depressurization system rough-in. In basement or slab-on-grade buildings, the components of a sub-slab depressurization system shall be installed during construction in accordance with AF103.3.1 through AF103.3 and AF103.5 through ~~AF108.9~~ AF103.6.5.

AF103.3.1 Gas permeable layer. ~~To facilitate future installation of an ASD system, a~~ A gas-permeable layer shall be constructed under all concrete slabs and other floor systems that directly contact the ground and are within the walls of the living spaces of the building.

The gas-permeable layer shall ~~be designed to allow the lateral flow of soil gases and~~ consist of one of the following:

1. A uniform layer of clean aggregate, not less than 4 inches [102 mm] in depth, shall be placed over the soil. The aggregate shall have a void ratio of not less than 35 percent or a Size Number 4, 5, 56, or 6 as classified by ASTM C33.
2. A uniform layer of native or fill sand, a minimum of 4 inches [102 mm] in depth, overlain by a layer or strips of geotextile drainage matting ~~or loop of perforated pipe~~. The geotextile drainage matting shall have a cross-sectional area of at least 12 square inches [774 sq mm]. The geotextile matting shall be placed no closer than 12 inches [305 mm] to the foundation wall around the interior of the foundation perimeter.
3. A loop of 4 inch [102 mm] nominal or larger size perforated pipe placed in a trench along the perimeter of the foundation, with the trench backfilled with clean aggregate having a void ratio of not less than 35 percent or a Size Number 4, 5, 56, or 6 as classified by ASTM C33 such that the pipe is surrounded by a minimum of 4 inches [102mm] of aggregate on all sides. The pipe shall be placed no closer than 12 inches [305 mm] to the foundation wall around the interior of the foundation perimeter.
4. Other materials, systems or floor designs with demonstrated capability ~~for depressurization~~ to allow the lateral flow of soil gases from across the entire sub-floor area.

AF103.3.2 Soil gas retarder. A minimum 6-mil ~~[~~ [.006 in; 0.15 mm] (or 3-mil ~~[~~ [.003 in; 0.075 mm] cross-laminated) polyethylene or equivalent flexible sheeting material shall be placed on top of the gas permeable layer prior to casting the slab or placing the floor assembly. The sheeting shall cover the entire floor area with separate sections of sheeting lapped not less than 12 inches [305 mm]. Openings in the sheeting caused by pipe, wire and other penetrations shall be sealed. Punctures or tears in the material shall be sealed or covered with additional sheeting. ~~Where under slab insulation is installed, it shall be placed on top of the sheeting.~~

AF103.3.3 Vent pipe connector. A ~~3~~ 4 inch (102 mm) nominal ~~[76 mm] or larger size ABS, PVC or equivalent gas-tight pipe shall be embedded vertically into the gas permeable layer before the slab is cast. A~~ diameter tee fitting or equivalent method shall be used to secure the vent pipe opening within the gas permeable layer. Not less than ~~5~~ 4 feet [~~1524~~ 1219 mm] of perforated pipe or geotextile matting shall be connected to each of the two horizontal openings of the tee fitting or the two horizontal openings shall be connected to the interior drain tile system.

Alternatively, ~~the 3 inch nominal [76 mm] size pipe shall connect through~~ a sealed sump cover where the sump communicates directly with the sub-slab aggregate or communicates with it through a drainage system , shall secure the vent pipe opening. A flexible rubber coupling connector shall be provided at the sump cover connection to facilitate servicing the sump.

AF103.4 Sub-membrane depressurization system rough-in. In buildings with crawl space foundation, the components of a

sub-membrane depressurization system shall be installed during construction in accordance with AF103.4.1 through ~~AF103.4.3~~ AF103.6.5. **Exception:** ~~Buildings in which an approved mechanical crawl space ventilation system is installed.~~

1. Buildings in which an approved mechanical crawl space ventilation system is installed.
2. Where the soil gas retarder will be covered with concrete, the requirements of 103.3.2 shall apply.

~~**AF103.4.1 Ventilation.** Crawl spaces shall be provided with vents to the exterior of the building. The minimum net area of ventilation openings shall comply with Section R408.1.~~

~~**Exception:** Outdoor ventilation not required for conditioned crawl spaces.~~

~~**AF103.4.2**~~ **AF103.4.1 Soil gas membrane** The soil in crawl spaces shall be covered with a continuous layer of soil gas-membrane complying with ASTM E1745 Class A, B or C. The membrane shall be lapped not less than ~~12~~ 6 inches [~~305~~ 152 mm] at joints and shall extend upwards 12 inches [305 mm] and be sealed to all foundation walls enclosing the crawl space area. Seams shall be sealed with polyurethane caulk complying with ASTM C920 class 25 or highter, or taped or equivalent method, installed in accordance with the manufacturer's recommendations.

~~**AF103.4.3**~~ **AF103.4.2 Vent pipe connector.** A tee fitting shall be installed beneath the soil gas membrane with not less than 10 feet of perforated pipe connected to each of the two horizontal openings of such fitting or the two horizontal openings of the tee fitting shall connect to the interior drain tile system. The branch opening of the tee fitting shall be connected to the vent pipe in accordance with section AF103.5.

AF103.5 Vent pipe. A 3 inch [76 mm] nominal size or larger ~~ABS, PVC or equivalent~~ gas-tight pipe shall be extended from the tee fitting up through the building floors and in accordance with Sections AF103.5.1 through ~~AF103.5.8~~ AF103.5.6. Materials used shall comply with P3002.1.

AF103.5.1 Vent pipe termination. The vent pipe shall terminate vertically upward not less than 12 inches [305 mm] above the roof in a location not less than 10 feet [3048 mm] away from any window, air take, or other opening into the conditioned spaces of the building that is less than 2 feet [610 mm] below the exhaust point. The vent pipe shall terminate not less than 10 feet [3048 mm] from windows or other opening in adjoining or adjacent buildings.

AF103.5.2 Vent pipe drainage. ~~Components of the~~ The radon vent pipe ~~system~~ shall be installed to provide condensate drainage to the ground beneath the slab or ~~soil-gas-retarder~~ membrane. The pipe shall not be trapped and shall have a minimum slope of one-eighth inch per foot (1 percent slope).

~~**AF103.5.3 Vent pipe installation.** Components of the radon vent pipe system shall be installed in accordance with Section 512 of the International Mechanical Code.~~

~~**AF103.5.4**~~ **AF103.5.3 Vent pipe identification.** *No change to text.*

~~**AF103.5.5**~~ **AF103.5.4 Combination foundations.** ~~Combination basement and crawl space and combination slab-on grade and crawl space foundations~~
Where more than one type of foundation is present, all foundation areas shall have separate radon vent pipes installed in each type of foundation area. Vent pipes shall connect to a single vent that terminates above the roof or each individual vent pipe shall terminate separately above the roof.

~~**AF103.5.6**~~ **AF103.5.5** ~~**Multiple vent pipes**~~ **Separate foundation areas.** In ~~*dwellings*~~ buildings where interior footings or other barriers separate ~~-~~ foundation areas ~~of subslab aggregate or other gas-permeable material~~, each area shall be fitted with an individual vent pipe or a pipe loop or equivalent method shall connect such areas below the slab. Vent pipes shall connect to a single vent that terminates above the roof or each individual vent pipe shall terminate separately above the roof.

AF103.5.6 Provisions for radon fan. To facilitate possible installation of a radon fan, the following shall be provided:

~~**AF103.5.7**~~ **AF103.5.6.1 Vent pipe accessibility,** ~~Radon~~
The radon vent pipes shall be provided with access in an attic or other area outside the habitable space for the purpose of installing a ~~ASD~~ fan. The pipe shall be centered in an unobstructed cylindrical space having a vertical height of not less than 48 inches [122 cm] and a diameter of not less than 21 inches [53 cm] in the location where a fan would be installed.

Exception: Where an approved electrical supply is installed on the roof for future use.

~~**AF103.5.8 Provision for ASD fan.** A cylindrical space having a vertical height of not less than 48 inches [122 cm] and a diameter of not less than 21 inches [53 cm] shall be provided in the location where an ASD fan would be installed. The ASD pipe shall be centered in this space. The space provided for the ASD fan shall be located in accordance with Section AF103.6.~~

~~**AF103.6**~~ **AF103.5.6.2** ~~**ASD**~~ **Radon fan location.** ~~ASD fans~~

Fans shall be ~~installed~~ located outdoors, in attics or in garages that are not beneath conditioned spaces. ~~ASD fans~~ Fans shall not be installed below ground, in conditioned spaces, in occupiable spaces of a building or in any basement, crawlspace or other interior location that is directly beneath a conditioned or occupiable space of a building. ~~ASD fans~~ Fans shall not be installed in any location where pipe positively pressured by the fan would be located inside conditioned or occupiable space.

~~**AF103.7**~~ **AF103.5.6.3 Power source.** To provide for future installation of an ~~ASD~~ radon fan, an electrical circuit that terminates in an approved junction box shall be installed in the attic or other anticipated location of ~~ASD fans~~ a fan.

~~**AF103.8**~~ **AF103.6 Entry routes.** Potential radon entry routes shall be closed in accordance with Sections ~~AF103.8.1~~ AF103.6.1 through ~~AF103.8.9~~ AF103.6.5.

~~**AF103.8.1**~~ **AF103.6.1 Floor openings.** Openings around bathtubs, showers, water closets, pipes, wires and other objects that penetrate concrete slabs or floor assemblies shall be sealed in a permanent manner.

Exception: Sealing is not required for floors above conditioned spaces.

~~**AF103.8.2**~~ **AF103.6.2 Concrete joints.** ~~Control joints, isolation~~
Isolation joints, construction joints and other joints in concrete slabs and between slabs and foundation walls shall be sealed with a caulk or sealant. Gaps and joints shall be cleared of loose material and filled with polyurethane caulk complying with ASTM C920 class 25 or higher or equivalent method ~~applied~~ installed in accordance with the manufacturer's recommendations.

~~**AF103.8.3 Foundation and condensate drains.** Foundation and HVAC condensate drains routed below the soil gas retarder area shall be isolated through a plumbing trap or routed through non-perforated pipe to outdoors.~~

~~**AF103.8.4**~~ **AF103.6.3 Sumps.** *No change to text.*

~~**AF103.8.5**~~ **AF103.6.4 Foundation walls.** Hollow block masonry foundation walls shall be constructed with a continuous course of solid masonry, one course of masonry grouted solid, or a solid concrete beam at or above finished ~~ground surface~~ grade to prevent passage of air from the interior of the wall into the living space. Where a brick veneer or other masonry ledge is installed, the course immediately below that ledge shall be sealed. Joints, cracks and other openings around penetrations of both exterior and interior surfaces of masonry block and wood foundation walls below the ground surface shall be filled with polyurethane caulk complying with ASTM C920 class 25 or higher, or equivalent method ~~applied~~ installed in accordance with the manufacturer's recommendations. Penetrations of concrete walls shall be sealed.

~~**AF103.8.6 Dampproofing.** The exterior surfaces of foundation walls below *grade* shall be dampproofed in accordance with Section R406.~~

~~**AF103.8.7 Air-handling units** Air-handling units in crawl spaces shall be sealed to prevent air from being drawn into the unit.~~

~~**AF103.8.8 Crawl space floors.** Openings around penetrations through floors above crawl spaces shall be caulked or otherwise filled to prevent air leakage.~~

~~**Exception:** Air sealing is not required for floors above conditioned crawl spaces complying with Section R408.3.2.2.~~

~~**AF103.8.9**~~ **AF103.6.5 Crawl space access.** Access doors and other openings or penetrations between basements and adjoining crawl spaces shall be closed, gasketed or otherwise filled to prevent air leakage.

Exception: Air sealing is not required for conditioned crawl spaces ~~conforming to Section R408.3.2.2~~.

FIGURE AF104
EPA MAP OF RADON ZONES

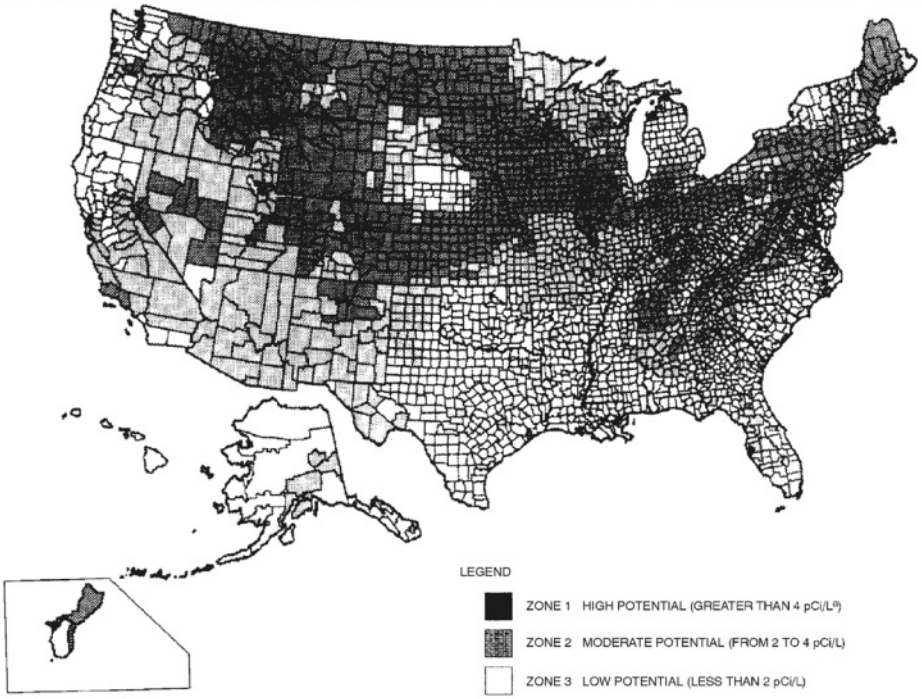

a. pCi/L standard for picocuries per liter of radon gas. The U.S. Environmental Protection Agency (EPA) recommends that homes that measure 4 pCi/L and greater be mitigated.

The EPA and the U.S. Geological Survey have evaluated the radon potential in the United States and have developed a map of radon zones designed to assist *building officials* in deciding whether radon-resistant features are applicable in new construction.

The map assigns each of the 3,141 counties in the United States to one of three zones based on radon potential. Each zone designation reflects the average short-term radon measurement that can be expected to be measured in a building without the implementation of radon-control methods. The radon zone designation of highest priority is Zone 1. Table AF104 lists the Zone 1 counties illustrated on the map. More detailed information can be obtained from state-specific booklets (EPA-402-R-93-021 through 070) available through State Radon Offices or from EPA Regional Offices.

TABLE AF104 (1)
HIGH RADON-POTENTIAL (ZONE 1) COUNTIES[a]

a. The EPA recommends that this county listing be supplemented with other available State and local data to further understand the radon potential of a Zone 1 area.

Commenter's Reason: Appendix F has not been updated in 20 plus years. This change proposal is to provide clarity in a few construction details and resolve longstanding editorial issues, as well as to address a few significant installation problems which continue to occur and impact the effectivity of radon control means in new construction.

Additional detail has been provided on the vent pipe connector in AF103.3.3, the connection between the vertical radon vent pipe and the gas permeable layer below the crawl space or slab and. This connection has suffered from consistent clogging with soil, concrete and/or gravel. A requirement for a couple of short lengths of perforated piping in the gas permeable layer and clarification that the tee fitting shall secure the vent pipe will largely prevent this clogging.

Another latent problem which occurs often in the field is that the vent piping is routed through the attic space without allowing access to the vent pipe and leaving insufficient headroom for a fan if system activation is required. Space considerations are provided to address this problem in AF103.6. There is no change in the scope of Appendix F and fan installation is not a requirement.

Lack of sealing of the submembrane soil gas retarder creates problems in systems installed in homes with crawl spaces. In this comment, sealing is added (except for where the crawl space will be covered by concrete) to AF 103.4.1and the required 12-inch lapping of joints is reduced to 6 inches.

Several editorial changes in this public comment clarify without expanding requirements. Along with some fairly self-explanatory edits, these changes include:

• AF 101. General specifies that the appendix applies to radon control methods where installed and that published state/local data supersede the radon zone map and table.

• The definition of radon gas is simplified and includes radon's element number.

• The title and definition of rough-in are clarified, with the requirement portion of the definition moved to the applicable section and the word "radon" added to prevent confusion with rough-in used elsewhere in the code.

• In AF103.3.1 Gas Permeable Layer, the specification allowing for "the lateral flow of gases" is moved to the final option since the first three options satisfy this need.

• The description of materials for vent pipes (AF103.5) was changed from "ABS, PVC or equivalent" to "comply with P3002.1"
• Redundancies with other code requirements for ventilation, foundation and condensate drains, damp proofing, and air handler sealing have been removed.
• A proposed reference to IMC Section 512 has been removed.
• An exception for sealing for floors above conditioned spaces is added in AF 103.6.1.
• Sealing requirements for control joints were eliminated in AF 103.6.2.

21,000 Americans die each year from radon-induced lung cancer. The primary source of exposure to radon for the general public is the home. Geographical areas of the highest radon potential in the United States are located in EPA radon zones 1. The EPA estimates that 1 out of 15 of all homes in the US has elevated indoor radon levels. The incidence of elevated radon may be greater than 7 out of 10 homes in some high radon areas. Appendix F is a voluntary code which can be adopted by local jurisdictions where radon is known to be a problem.

Cost: The additional cost of the revised code change proposal is $10 for 10 feet of 4" perforated pipe and $10 for caulk to seal the soil gas retarder inside crawl spaces. There is also a labor component of cost to install these additions which is minimal for the perforated pipe and variable for the sealing depending on the size of the crawlspace.

RB362-16

RB363-16

IRC: AK101, AK101.1, AK102, AK102.1, AK102.1.1, AK103, AK103.1, AK104.

Proposed Change as Submitted

Proponent : Donald Sivigny, representing Association of Mn Building Officials (don.sivigny@state.mn.us)

2015 International Residential Code

Revise as follows:

~~K~~ SECTION R327 SOUND TRANSMISSION

~~SECTION AK101 GENERAL~~

~~AK101.1~~ R327.1 General. *No change to text.*

Delete without substitution:

~~SECTION AK102 AIR-BORNE SOUND~~

~~AK102.1~~ R327.2 ~~General~~ Air-borne sound. *No change to text.*

~~AK102.1.1~~ R327.2.1 Masonry. *No change to text.*

~~SECTION AK103 STRUCTURAL-BORNE SOUND~~

Revise as follows:

~~AK103.1~~ R327.3 ~~General~~ Floor/ceiling assemblies. *No change to text.*

Delete without substitution:

SECTION AK104 REFERENCED STANDARDS

~~ASTM~~		
~~ASTM E 90—04~~	~~Test Method for Laboratory Measurement of Air-borne Sound Transmission Loss of Building Partitions and Elements~~	~~AK102~~
~~ASTM E 492—09~~	~~Specification for Laboratory Measurement of Impact Sound Transmission through Floor-ceiling Assemblies Using the Tapping Machine~~	~~AK103~~
~~The Masonry Society~~		
~~TMS 0302—12~~	~~Standard for Determining the Sound Transmission Class Rating for Masonry Walls~~	~~AK102.1.1~~

Reason: Previous versions of the code included the sound transmission language of Appendix K into the body of the code. Making the information easier to access and it also acted as a reminder for the required use of sound transmission into the buildings design. In the 2006, 2012, and 2015 versions of the IRC this language was not included in the body of the code. With out some language addressiing the need to include sound transmission in the buildings design into the body of the code,

there is no way to track the code requirement for sound transmission back to Appendix K. Unless the jurisdiction adopts appendix K as part of their coe for residential buildings,specifically into thier ordinance. Adding this language back into the code will also create better built buildings and make it easier to enforce the requirements for sound transmission.

Cost Impact: Will not increase the cost of construction
There will be no cost impact related to the inclusion of the proposed amendment. The requirements for sound transmission are already listed in the code in Appendix K. This proposal is only to add language to provide tracking language from sectiion Chapter 3 to Appendix K.

RB363-16 : R302.3.2-SIVIGNY11803

Public Hearing Results

Committee Action: **Disapproved**

Committee Reason: This proposal deletes Appendix K and puts it into the body of the code.

Assembly Action: **None**

Individual Consideration Agenda

Proponent : Scott Campbell, representing Portland Cement Association (scampbell@cement.org) requests Approve as Submitted.

Commenter's Reason: The need for proper acoustic design is a crucial element of a well-designed building, and a critical part of ensuring the habitable space suits the needs of the occupants. Locating the provisions in the appendix could prevent them from being implemented, since the appendices may not be adopted even when adopting the main code. Placing the language back in the main body of the code ensures that the provisions will be mandatory in all jurisdictions adopting the IRC, regardless of whether or not the appendices are adopted.

RB363-16

RB372-16

IRC: , AV101 (New), AV101.1 (New), AV101.2 (New), AV101.3 (New), AV101.4 (New), AV102 (New), AV102.1 (New), AV103 (New), AV103.1 (New), AV103.2 (New), AV103.3 (New), AV104 (New), AV104.1 (New), AV104.2 (New), AV104.3 (New), AV104.4 (New), AV104.5 (New), AV104.6 (New), AV105 (New), AV105.1 (New), AV105.2 (New), AV105.3 (New), AV105.4 (New), AV105.5 (New), AV106 (New), AV106.1 (New), AV106.2 (New), AV106.3 (New), AV106.4 (New).

Proposed Change as Submitted

Proponent : Kelly Cobeen, Wiss Janney Elstner Associates, Inc., representing Federal Emergency Management Agency and National Institute of Building Sciences Building Seismic Safety Council's Code Resource Support Committee (KCobeen@wje.com)

2015 International Residential Code

Add new text as follows:

APPENDIX V Seismic Repair and Seismic Retrofit of Masonry Chimneys in Existing One- and Two-Family Detached Dwellings.

SECTION AV101 General

AV101.1 Scope. This appendix chapter provides prescriptive methods for repair of earthquake-damaged chimneys and fireboxes in one- and two-family detached dwellings. The provisions of this chapter are also allowed to be used for pre-earthquake seismic retrofit of existing masonry chimneys. The use of these provisions is limited to one- and two-family dwellings of wood or cold-formed steel light-frame construction.

AV101.2 Intent. The provisions of this chapter are intended to promote public safety and welfare by reducing the risk of earthquake-induced damage, but will not necessarily prevent damage.

AV101.3 Repair and retrofit methods. Repair or seismic retrofit of existing masonry chimneys and fireboxes shall be in accordance with one of the following methods:

1. Capping of the chimney at the roof level in accordance with Section AV103,
2. Reconstruction of the chimney from the top of the smoke chamber up in accordance with Section AV104.
3. Reconstruction of the chimney from the top of the smoke chamber up and installation of a fireplace insert in accordance with Section AV105, or
4. Full reconstruction of the firebox and chimney in accordance with Section AV106.

AV101.4 General Requirements. Other items of repair, retrofit, or reconstruction not specifically addressed in this chapter shall be in accordance with applicable requirements of this code.

SECTION AV102 Definition

AV102.1 General. The following word and term shall, for purposes of this appendix, have the meaning shown herein.
CHIMNEY CHASE. A light-frame weather enclosure surrounding a factory-built metal chimney.

SECTION AV103 Capping of Chimney at Roof Level

AV103.1 Scope. This section provides prescriptive methods for partial removal and capping of masonry chimneys at the roof level.

AV103.2 Limitations. The following limitations apply to this section:

1. Use of these provisions on a damaged chimney is limited to chimneys in which damage only occurs above the roof level. A chimney and firebox inspection indicating extent of damage shall be submitted with the permit application.
2. Access to the interior of the firebox shall be completely closed off from the dwelling interior with an infill of gypsum wallboard or wood structural panel sheathing, masonry, or other material permanently affixed.

AV103.3 Chimney partial removal and capping. The chimney shall be removed to a distance of eight inches above the highest adjacent roofing, leaving existing roof flashing undisturbed. A sheet metal cap of galvanized steel or stainless steel shall be provided for weather protection. The cap shall extend not less than three inches down each side of the chimney. The cap shall be secured to the chimney with corrosion-resistant fasteners.

SECTION AV104 Reconstruction From Top of Smoke Chamber

AV104.1 Scope. This section provides prescriptive methods for partial removal of the masonry chimney above the smoke chamber-to-chimney transition, and reconstruction using a factory-built metal chimney enclosed in a chimney chase.

AV104.2 Limitations. The following limitations apply to this section:

1. Use of these provisions on a damaged chimney is limited to chimneys in which damage only occurs above the

transition from smoke chamber to chimney. A chimney and firebox inspection indicating extent of damage shall be submitted with the permit application.

2. Use of these provisions is limited to chimneys occurring at the exterior walls of dwellings. Chimneys completely interior to the dwelling are beyond the scope of this appendix.
3. Where the exterior walls adjacent to the chimney are required to be fire-rated, chimney chase construction shall confirm to the requirements of Section R302.

AV104.3 Chimney partial removal. The chimney shall be removed down to the top of the smoke chamber-to-chimney transition, as shown in Figure AV104.3.

FIGURE AV104.3
Components of masonry fireplace with chimney reconstruction from top of smoke chamber up.

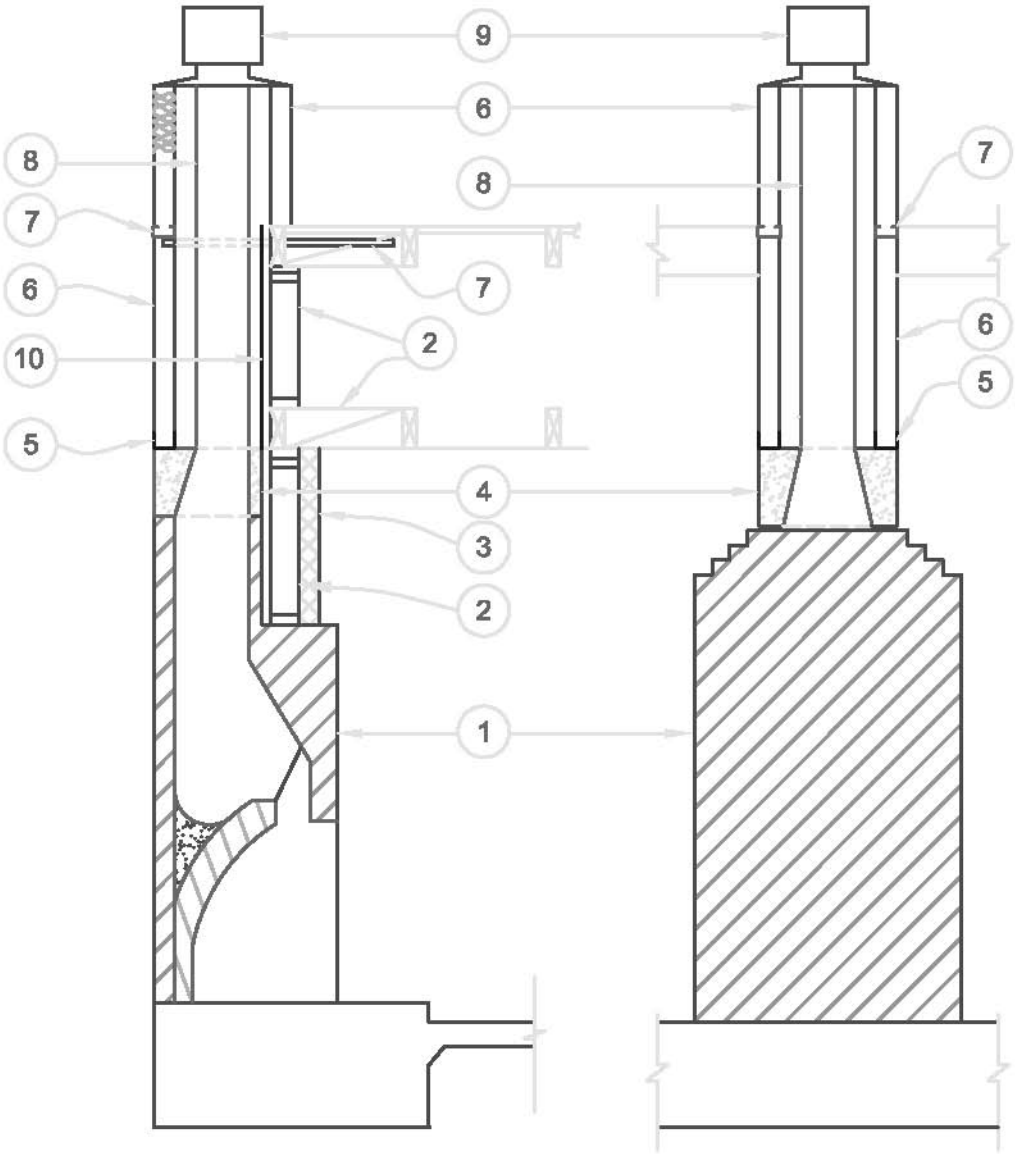

See Section AV104.4 for numbered items.

AV104.4 Reconstruction. Reconstruction shall be in accordance with the following requirements and Figure AV104.3. Item numbers below correspond to Figure AV104.3.

1. Masonry firebox. The existing masonry firebox shall remain up to the top of the smoke chamber as shown in Figure AV104.3.
2. Existing framing. Existing roof, wall, and ceiling framing shall remain. Existing framing shall be re-supported in accordance with applicable requirements of this code where existing support is disrupted.
3. Masonry veneer. Where existing masonry veneer is disrupted, re-support and anchorage of masonry veneer shall be provided in accordance with the requirements of this code.

4. Smoke chamber-to-chimney transition. The transition from the smoke chamber to the metal chimney shall be in accordance with Section AV104.5.
5. Track or sill plate. Cold-formed steel track sections matching the thickness of the studs shall be provided at the bottom of cold-formed steel chimney chase walls. Wood sill or bottom (sole) plates, having a width not less than the supported studs, shall be provided at the bottom of wood chimney chase walls. Wood sill or bottom plates shall be protected against decay in accordance with Section R317.1. Fasteners in contact with wood sill or bottom plates shall be in accordance with Section R317.3. Tracks and sill plates shall be anchored to the concrete beam in accordance with Section AV104.5
6. Chimney chase stud wall. Chimney chases shall be constructed of full-height wood studs in accordance with Section R602 or full-height cold-formed steel studs in accordance with Section R603. Studs shall be selected based on story clear height, but not less than eight feet, and applicable Section R301.2 wind criteria. Wood studs shall be not less than 2 by 3 and spaced not more than 12 inches on center. Cold-formed steel studs shall be not less than 43 mil thickness by 2-1/2 inch deep and spaced not more than 12 inches on center. The top of the chimney shall extend not less than three feet above the edge of roof and not less than two feet above the maximum roof elevation, or maximum elevation of other construction located within a ten foot horizontal dimension in any direction from the chimney. Where this requires that the chimney chase extend more than four feet above the highest roof elevation immediately adjacent to the chimney, bracing of the chimney chase shall be provided in accordance with Section AV104.6.
7. Chimney chase connection to dwelling. The chimney chase studs shall be fastened to the existing dwelling exterior wall with minimum No. 8 wood screws at 12 inches on center. The chimney chase framing shall be strapped to existing floor, ceiling and roof framing with not less than two steel straps not less than 1-1/4 inches in width and 33 mil in thickness, on two opposing sides of the chimney. The steel straps shall be fastened to steel blocking between steel studs with minimum four No. 8 sheet metal screws, or to wood blocking between wood studs with not less than four 8d common nails. the steel straps shall be fastened to existing wood floor, ceiling or roof framing with not less than four 8d common nails, or to existing steel framing with not less than four No. 8 sheet metal screws.
8. Factory-built metal chimney. Factory-built metal chimneys shall be in accordance with Section R1005.
9. Flue cap. Where required by the metal chimney manufacturer, a flue cap shall be installed, complying with the metal chimney's listing.
10. Fireblocking. Fireblocking between the chimney chase and the attic shall be installed as required by Section R302.11.

AV104.5 Smoke chamber-to-chimney transition. The transition from the masonry smoke chamber to the factory-built metal chimney and chimney chase shall be in accordance with the following requirements and Figure AV104.5.

1. A 12 gauge (97 mil) minimum thickness sheet steel transition cone shall be provided, as shown in Figure AV104.5. The transition cone shall have minimum 12 gauge (97 mil) thickness sheet steel top and bottom plates, and shall provide a smooth-surfaced transition between the flue opening at the top of the firebox and the anchor plate and metal flue. The bottom plate geometry shall match the opening geometry at the top of the smoke chamber, and the top plate geometry shall be coordinated with the UL listed anchor plate. The transition cone shall be set in cementitious grout, and all transition cone seams shall be continuously welded.
2. The transition cone base plate shall be anchored to the firebox masonry with not less than four 1/2-inch diameter galvanized threaded rod anchors, as shown in Figure AV104.5. The threaded rods shall be extended to one inch below the top of the concrete beam, shall be embedded six inches into masonry at the firebox, and shall be set in cementitious grout.
3. Reinforcing steel (rebar) and a concrete beam shall be constructed around the transition cone, using the cone as the inside form in accordance with Figure AV104.5. Not less than a 1-1/2-inch clear distance shall be provided between the rebar and outside face of concrete.
4. Mineral insulation shall be installed on top of the transition cone top plate as shown in Figure AV104.5 where required by the anchor plate manufacturer.
5. A fireplace adapter (chimney anchor plate), tested in accordance with UL 103a, shall be installed in accordance with the manufacturer's installation instructions.

FIGURE AV104.5
Masonry smoke chamber to chimney and chimney chase transition.

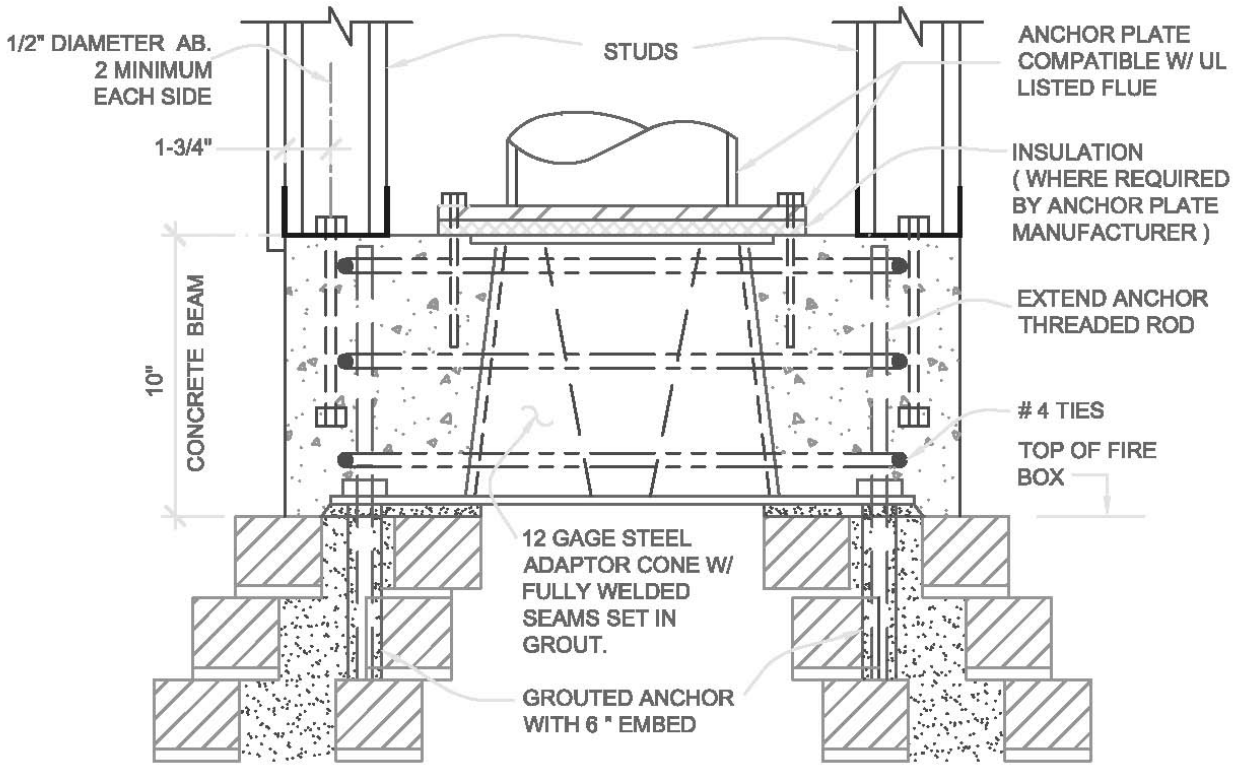

AV104.6 Chimney chase bracing to roof. Where bracing of the chimney chase is required by Section AV104.4, Item 6, the bracing shall be connected to the chimney chase in the upper third of the chimney chase clear height above the roof (H), in accordance with Figures AV104.6(1) and AV104.6(2). Bracing steel angles not less than 2-1/2x2-1/2x1/4-inch shall be provided at not less than two locations. The bracing slope shall be no less than 30 degrees and not more than 60 degrees from vertical.

FIGURE AV104.6
(1) Bracing of chimney chase to roof.

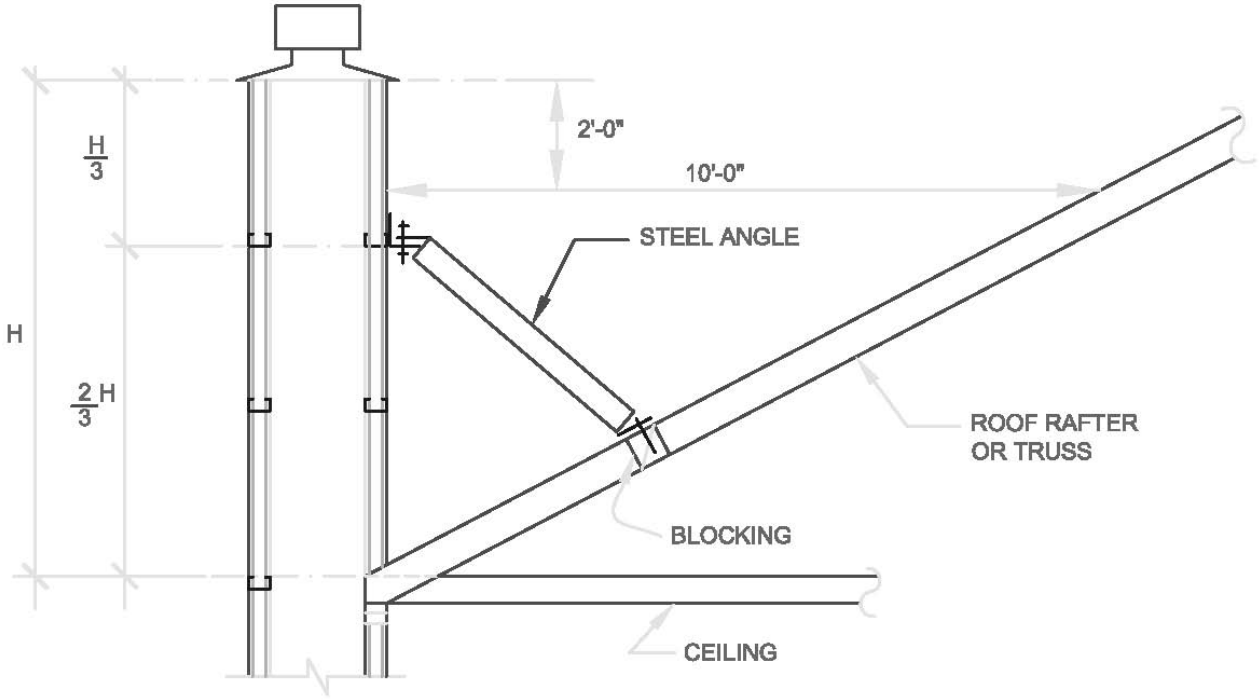

FIGURE AV104.6
(2) Details of chimney chase roof bracing.

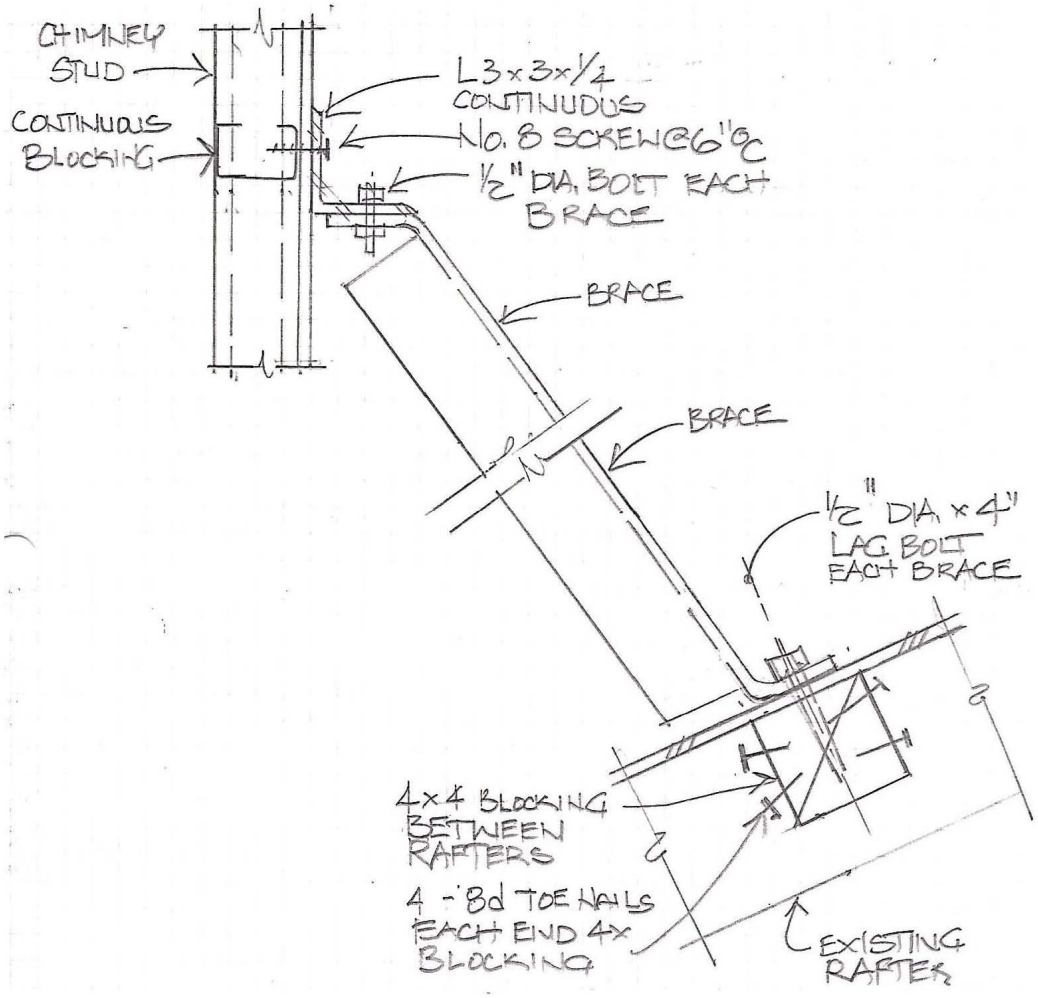

SECTION AV105 Reconstruction From Top of Smoke Chamber Using a Facotry-Built Fireplace Insert

AV105.1 Scope. This section provides prescriptive methods for partial removal of the masonry chimney above the smoke chamber-to-chimney transition, and reconstruction using a factory-built fireplace insert enclosed in a chimney chase.

AV105.2 Limitations. The following limitations apply to this section:

1. Use of these provisions on a damaged chimney is limited to chimneys in which damage only occurs above the transition from smoke chamber to chimney. A chimney and firebox inspection indicating extent of damage shall be submitted with the permit application.
2. Use of these provisions is limited to chimneys occurring at the exterior wall of dwellings. Chimneys completely interior to the dwelling are beyond the scope of this chapter.
3. Where the exterior walls adjacent to the chimney are required to be fire-rated, chimney chase construction shall confirm to the requirements of Section R302.

AV105.3 Chimney partial removal. The chimney shall be removed in accordance with Section AV104.3.

AV105.4 Reconstruction. Reconstruction shall be in accordance with Section AV104.4 and the following:

1. The factory-built fireplace insert shall conform to UL 1482.
2. The factory-built chimney liner shall conform to UL 1777.
3. A hearth extension, where required by the fireplace insert listing, shall conform to UL 1618.
4. The transition from masonry firebox and chimney liner to the factory-built chimney and chimney chase shall be constructed in accordance with Section AV105.5.

AV105.5 Smoke chamber-to-chimney transition. The transition from the masonry smoke chamber to the metal chimney and chimney chase shall be in accordance with the following requirements and Figure AV105.5.

1. A 12 gauge (97 mil) thickness sheet steel transition cone shall be provided as shown in Figure AV105.5. The transition cone shall have minimum 12 gauge (97 mil) thickness sheet steel top and bottom plates, and shall provide a smooth-surfaced transition between the flue opening at the top of the firebox and the anchor plate and metal flue. The bottom

plate geometry shall match and allow for attachment of the factory-built insert chimney liner. The top plate geometry shall be coordinated with the UL listed anchor plate. The transition cone shall be set in cementitious grout, and all transition cone seams shall be continuously welded.

2. The transition cone base plate shall be anchored to the firebox masonry with not less than four 1.2-inch diameter galvanized threaded rod anchors, as shown in Figure AV104.5. The threaded rods shall be extended to one inch below the top of the concrete beam, shall be embedded six inches into the masonry at the firebox, and shall be set in cementitious grout.
3. Reinforcing steel (rebar) and a concrete beam shall be constructed around the transition cone, using the cone as the inside form in accordance with Figure AV104.5. Not less than a 1-1/2 inch clear distance shall be maintained between rebar and the outside face of concrete.
4. The listed insert, chimney liner, chimney, and accessories shall be installed in accordance with the manufacturer's instructions and the listing. Clearances required by the manufacturer and the listing shall be maintained.

FIGURE AV105.5

Transition from masonry smoke chamber to factory-built chimney where factory-built fireplace insert is used.

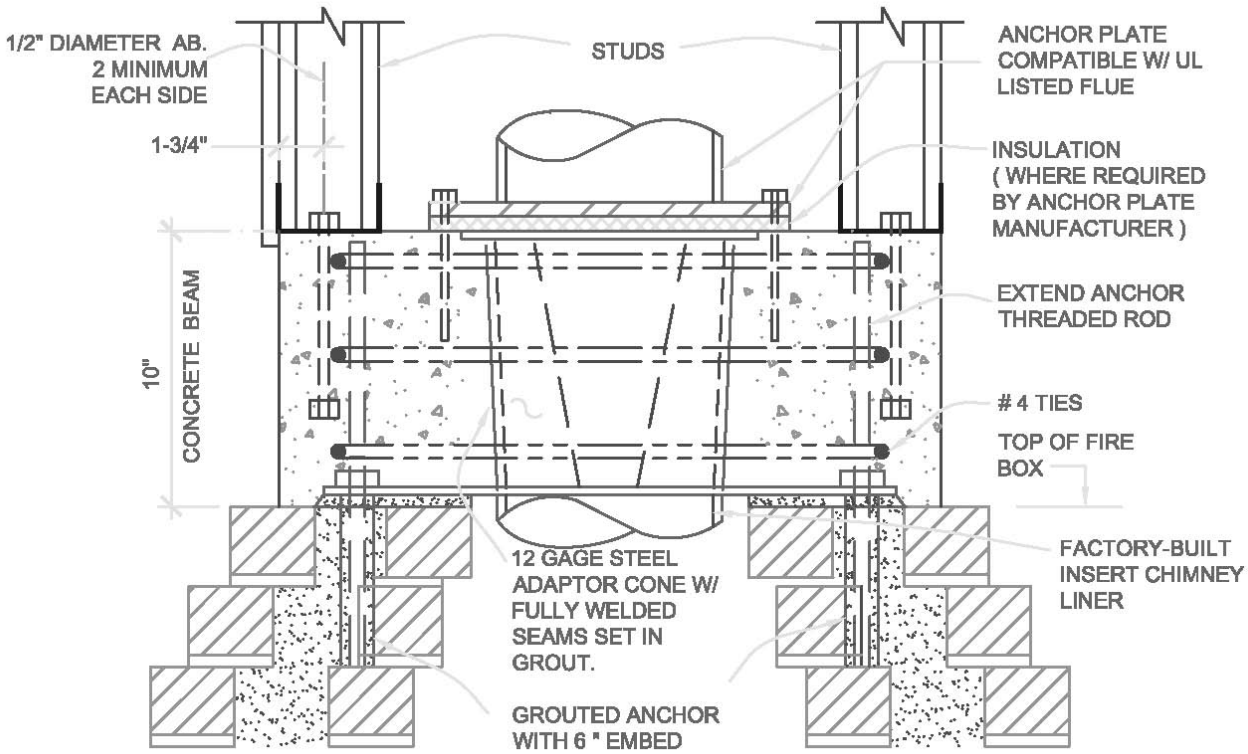

SECTION AV106 Full Reconstruction of Firebox and Chimney Using a Factory-Built Fireplace

AV106.1 Scope. This section provides prescriptive methods for complete removal of the masonry chimney and firebox, and for reconstruction using a factory-built fireplace enclosed in a chimney chase.

AV106.2 Limitations. The following limitations apply to this section:

1. Use of these provisions is limited to chimneys occurring at the exterior walls of dwellings. Chimneys completely interior to the dwelling are beyond the scope of this chapter.
2. Where the exterior walls adjacent to the chimney are required to be fire-rated, chimney chase construction shall confirm to the requirements of Section R302.

AV106.3 Chimney and firebox removal. The chimney and firebox shall be completely removed.

AV106.4 Reconstruction. Reconstruction shall be in accordance with the following requirements and Figure AV106.4. Item numbers below correspond to Figure AV106.4.

1. Existing foundation. Where a concrete footing exists, use of the concrete footing shall not be prohibited. Where the existing footing is other than concrete, the footing shall be removed and replaced in accordance with Chapter 4.
2. Extension of existing foundation. Where required to meet dimensional requirements specified by the fireplace manufacturer, the existing concrete footing shall be extended as shown in Figure AV106.4. Where footing extension is required, the depth of the new footing shall match the depth of the existing foundation, however the bottom of the

footing extension shall not be less than 12 inches below grade. The foundation extension shall be reinforced with one No. 4 bar at the top and bottom of new concrete, and adhesive dowels to the existing footing at not more than 12 inches on center. See the applicable provisions of this code for additional requirements.

3. Non-combustible hearth extension. Where required to meet the manufacturer's requirements or fireplace listing, a hearth extension confirming to UL 1618 shall be installed.
4. Factory-built fireplace. The factory-built fireplace shall comply with Section R1004.
5. Chimney chase stud walls. In single-story dwellings the studs shall extend full height from the foundation to the top of the chimney chase. In two-story dwellings the studs shall extend full-height from the second floor to the top of the chimney chase. Wood stud walls shall be constructed in accordance with Section R602. Cold-formed steel stud walls shall be constructed in accordance with Section R603. The top of the chimney shall extend not less than three feet above the roof and not less than two feet above the elevation of the roof or other construction within a ten foot dimension. Where this requires that the chimney chase extend more than four feet above the highest roof elevation immediately adjacent to the chimney, bracing of the chimney chase shall be provided in accordance with Section AV104.6.
6. Existing wall framing. Where existing wall framing requires modification to accommodate the new fireplace opening, framing shall be reconstructed in accordance with applicable requirements of Chapter 6.
7. Factory-built metal chimney. A listed and labeled factory-built metal chimney supplied by the fireplace manufacturer shall be installed in accordance with the monufacturer's installation instructions and listing.
8. Stud blocking. Continuous blocking shall be installed at 4'-0" maximum vertical spacing. Blocking size shall match studs.
9. Chimney chase connection to dwelling. The chimney chase studs shall be fastened to the existing residence exterior wall with not less than No. 8 wood screws at 12 inches on center. The chimney chase framing shall be strapped to the existing floor, ceiling, and roof framing with not less than two steel straps at each location. The steel straps shall be not less than 1-1/4-inch by 33 mil in thickness, and installed on two opposing faces of the chimney chase. The steel straps shall be fastened to steel blocking between steel studs with not less than four No. 8 sheet metal screws, or to wood blocking between wood studs with not less than four 8d common nails. The steel straps shall be fastened to existing wood floor, ceiling, or roof framing with minimum four 8d common nails or the existing steel framing with not less than four No. 8 sheet metal screws.
10. Existing roof, ceiling and floor framing. Existing roof, ceiling and floor framing shall remain. Existing framing shall be re-supported in accordance with applicable requirements of this code where existing support is disrupted.
11. Chimney chase. The chimney chase shall be constructed as required in item 6.
12. Chimney cap. A framed chimney cap shall be constructed at the top of the chimney chase.
13. Flue cap. Where required by the factory-built fireplace manufacturer, a flue cap shall be installed, complying with the fireplace listing.
14. Fireblocking. Fireblocking between the chimney chase and the attic or second floor framing shall be installed as required by Section R302.11.

FIGURE AV106.4

Components of a reconstructed fireplace and chimney with factory-built fireplace in chimney chase.

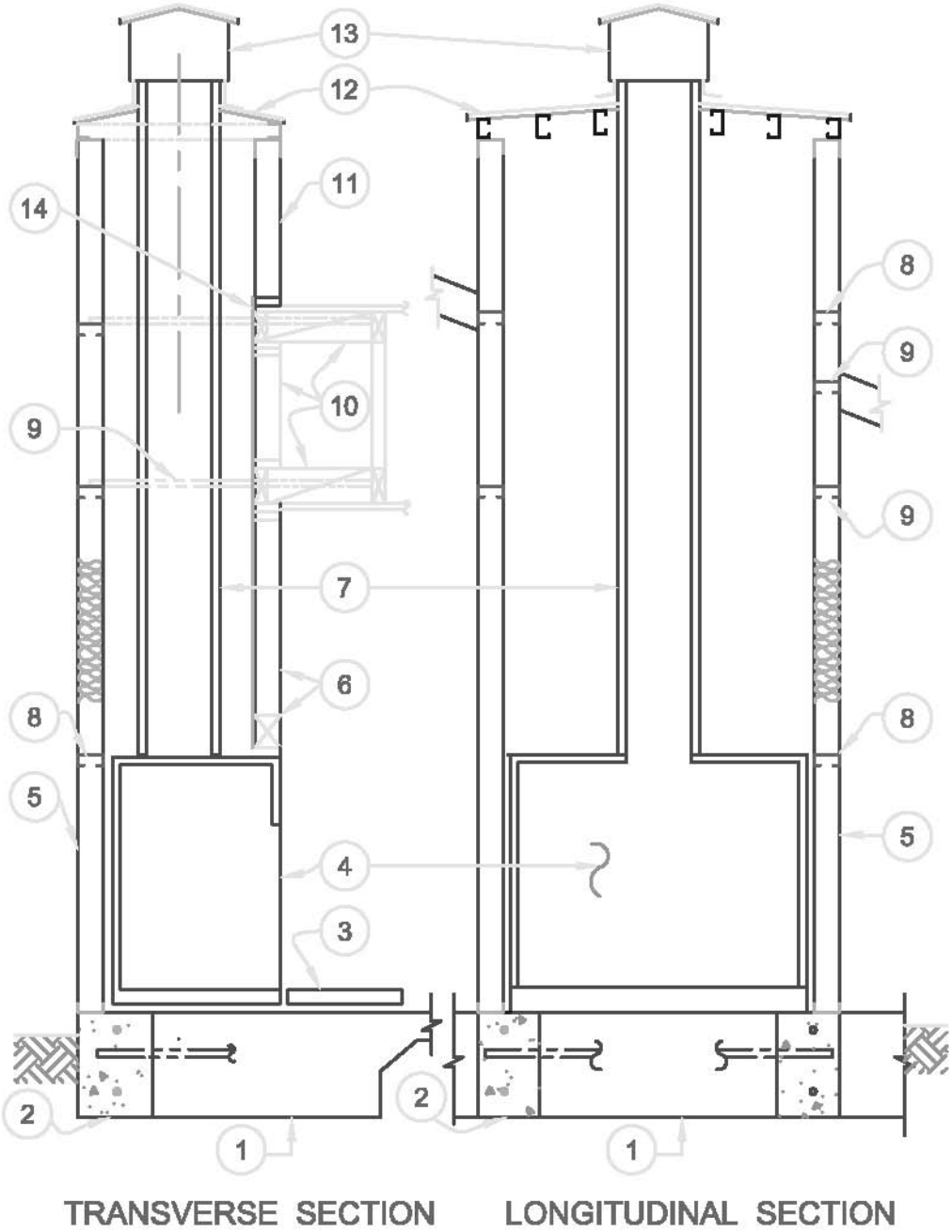

Reference standards type: This reference standard is new to the ICC Code Books

Add new standard(s) as follows:

UL 103a-2005, Ountline of Investigation for Masonry Fireplace Adapters for Residential Type and Building Heating Appliance Chimneys.

Reason: In most recent moderate to major earthquakes, widespread damage has occurred to masonry chimneys and fire boxes. As a result, jurisdictions have needed to provide direction for repair. Following the 2014 South Napa Earthquake, FEMA funded the writing of a recovery advisory (FEMA DR-4193-RA1) addressing recommendations for repair of earthquake damaged chimneys and fireboxes. The recommendations were drawn in part from repair approaches developed post-earthquake by the Cities of Napa, Seattle and Los Angeles. This code change makes the recovery advisory guidance available to all jurisdictions to adopt on an as-needed basis, and permits the same approaches developed for repair to be used for the voluntary retrofit of chimneys prior to an earthquake.

This appendix chapter requires the construction of chimney chases even though UL listed metal chimneys are not required to be enclosed in chases. This is done in order to return to the pre-removal enclosure geometry, allowing the wall and roof weather-barrier systems to be returned to their pre-removal configuration. This is not meant to prohibit alternative approaches being approved by the building official.

Cost Impact: Will not increase the cost of construction
The provisons of this appendix chapter will reduce the cost of repairing earthquake-damaged chimneys. The alternative methods of this chapter have estimated costs from less than $1,000.00 to approximately $5,000.00, as compared to a cost of $10,000.00 or higher for complete reconstruction of a masonry fireplace and chimney.

Analysis: A review of the standard(s) proposed for inclusion in the code, UL 103a, with regard to the ICC criteria for referenced standards (Section 3.6 of CP#28) will be posted on the ICC website on or before April 1, 2016.

RB372-16 : APPENDIX V-COBEEN11680

Public Hearing Results

Committee Action: **Disapproved**

Committee Reason: The proponents and opponents have indicated that there are flaws in the proposal that they would like to address in the public comment period. A generic repair without thorough examination by a qualified professional is inappropriate. This is a good concept. Something based on this concept may be appropriate as an appendix.

Assembly Action: **None**

Individual Consideration Agenda

Public Comment 1:

Proponent : Kelly Cobeen, Wiss Janney Elstner Associates, representing Federal Emergency Management Agency and National Institute of Building Sciences Building Seismic Safety Council's Code Resource Support Committee (KCobeen@wje.com) requests Approve as Modified by this Public Comment.

Modify as Follows:

2015 International Residential Code

AV101.1 Scope. This appendix chapter provides prescriptive methods for repair of earthquake-damaged chimneys and fireboxes in one- and two-family detached dwellings. The provisions of this chapter are also allowed to be used for pre-earthquake seismic retrofit of existing masonry chimneys. The use of these provisions is limited to one- and two-family dwellings of wood or cold-formed steel light-frame construction. The provisions of this chapter are not intended to prevent use of an engineered repair or seismic retrofit design in accordance with the International Building Code or alternative materials, design, and methods of construction or equipment in accordance with Section R104.11.

AV101.2 Intent. The provisions of this chapter are intended to promote public safety and welfare by reducing the risk of earthquake-induced damage, but will not necessarily prevent damage. The methods included in this chapter are not necessarily expected to provide equivalent safety or risk reduction.

AV101.3 Repair and retrofit methods. Repair ~~or seismic retrofit~~ of existing masonry chimneys and fireboxes shall be in accordance with one of the following methods:

1. Capping of the chimney at the roof or ceiling level in accordance with Section AV103,
2. Reconstruction of the chimney from the top of the smoke chamber up in accordance with Section AV104~~.~~ ,
3. Reconstruction of the chimney from the top of the smoke chamber up and installation of a factory-built fireplace insert in accordance with Section AV105, ~~or~~
4. Full reconstruction of the firebox and chimney in accordance with Section AV106~~.~~ ,
5. Repair in accordance with Section AV107 of chimneys otherwise conforming to the requirements of this code, or
6. Full reconstruction in accordance with the requirements of Chapter 10 of this code.

Seismic retrofit of existing masonry chimneys and fireboxes shall be in accordance with one of the following methods:

1. Capping of the chimney at roof or ceiling level in accordance with Section AV103.
2. Reconstruction of the chimney from the top of the smoke chamber up in accordance with Section AV104,
3. Reconstruction of the chimney from the top of the smoke chamber up and installation of a factory-built fireplace insert in accordance with Section AV105,
4. Full reconstruction of the firebox and chimney in accordance with Section AV106, or
5. Full reconstruction in accordance with the requirements of Chapter 10 of this code.

AV101.4 General Requirements. Other items of repair, retrofit, or reconstruction not specifically addressed in this chapter shall be in accordance with applicable requirements of this code. Exterior wall coverings shall not exceed the weight limits of Chapter 3 of this code.

AV102.1 General. The following word and term shall, for purposes of this appendix, have the meaning shown herein.
CHIMNEY CHASE. A light-frame weather enclosure surrounding a factory-built ~~metal~~ chimney.

AV103.1 Scope. This section provides prescriptive methods for partial removal and capping of masonry chimneys at the roof or ceiling level.

AV103.2 Limitations. ~~The following limitations apply~~ Use of these provisions on a damaged chimney is limited to ~~this section:~~ chimneys in which damage only occurs above the roof level. A chimney and firebox inspection indicating extent of damage shall be submitted with the permit application.

~~1. Use of these provisions on a damaged chimney is limited to chimneys in which damage only occurs above the roof level. A chimney and firebox inspection indicating extent of damage shall be submitted with the permit application.~~
~~2. Access to the interior of the firebox shall be completely closed off from the dwelling interior with an infill of gypsum wallboard or wood structural panel sheathing, masonry, or other material permanently affixed.~~

AV103.3 Chimney partial removal and capping. The chimney shall be removed to a distance of ~~eight~~ at least seven inches but not more than twelve inches above the highest adjacent ~~roofing~~ roof elevation, leaving existing roof flashing undisturbed. A sheet metal cap of galvanized steel or stainless steel shall be provided for weather protection. The cap shall extend not less than three inches down each side of the chimney. The cap shall be secured to the chimney with corrosion-resistant fasteners. For a fireplace and chimney located at the dwelling interior, the chimney shall be permitted to be removed to a distance of not more than eight inches above the top of ceiling framing or attic floor framing, capped as previously described, and the roof opening closed in accordance with this code.

Access to the interior of the firebox shall be completely closed off from the dwelling interior with an infill of gypsum wallboard, wood structural panel sheathing, masonry, or other material, permanently affixed.

The capped chimney shall not be used to convey products of combustion. Any flues discharging products of combustion through the chimney being capped shall be re-routed in accordance with applicable provisions of Chapters 13, 18, and 24.

AV104.1 Scope. This section provides prescriptive methods for partial removal of the masonry chimney above the smoke chamber-to-chimney transition, and reconstruction using a factory-built ~~metal~~ chimney enclosed in a chimney chase.

AV104.2 Limitations. The following limitations apply to this section:

1. Use of these provisions on a damaged chimney is limited to chimneys in which damage only occurs above the transition from smoke chamber to chimney. A chimney and firebox inspection indicating extent of damage shall be submitted with the permit application.
2. Use of these provisions is limited to chimneys occurring at the exterior walls of dwellings. Chimneys completely interior to the dwelling are beyond the scope of this ~~appendix~~ section.
3. ~~Where the exterior walls adjacent to the chimney are required to be fire-rated, chimney chase construction shall confirm to the requirements of Section R302.~~

FIGURE AV104.3
Components of masonry fireplace with chimney reconstruction from top of smoke chamber up.

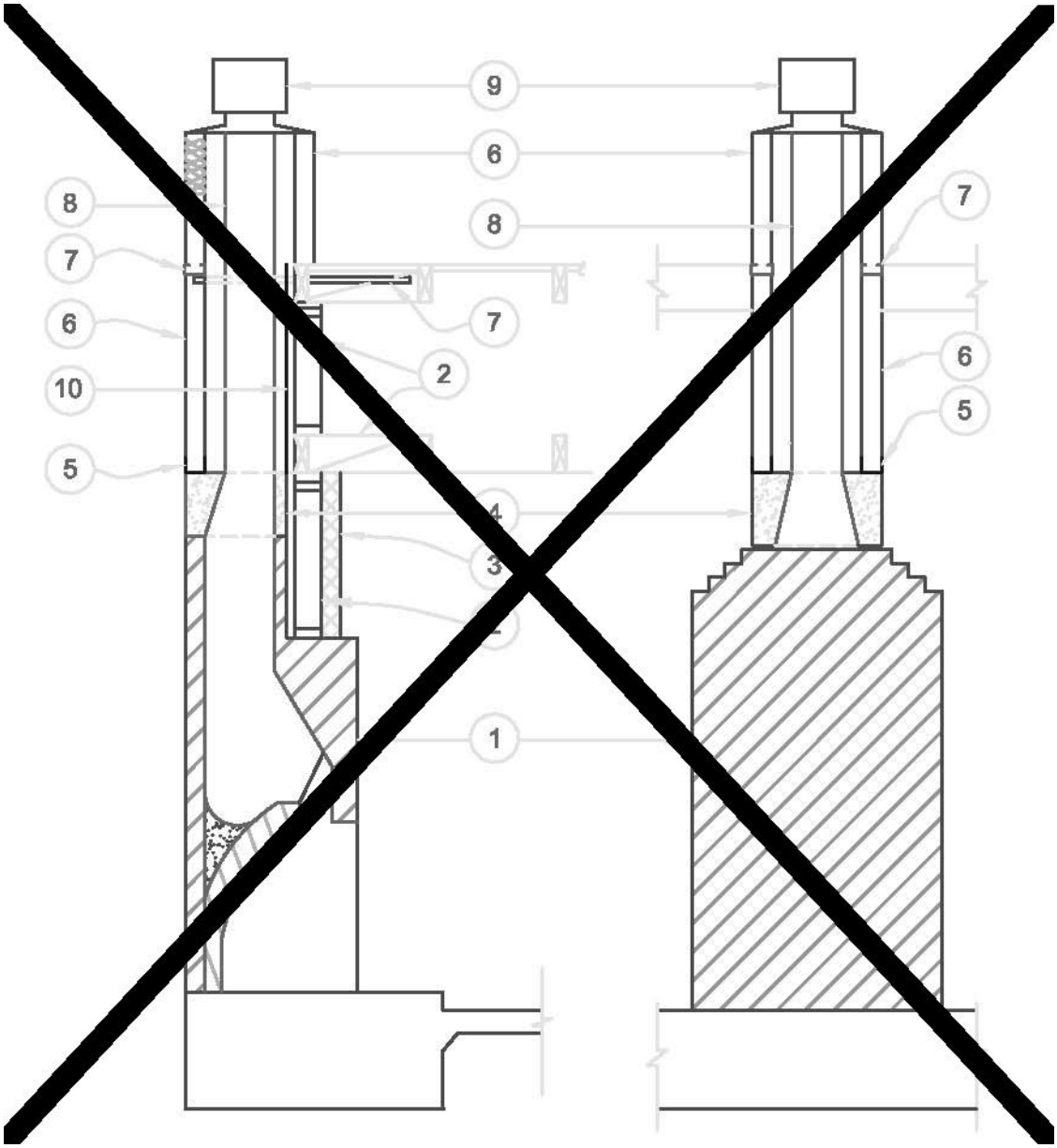
9
6
8
7
6
10
5
8
7
7
2
4
3
1
6
5

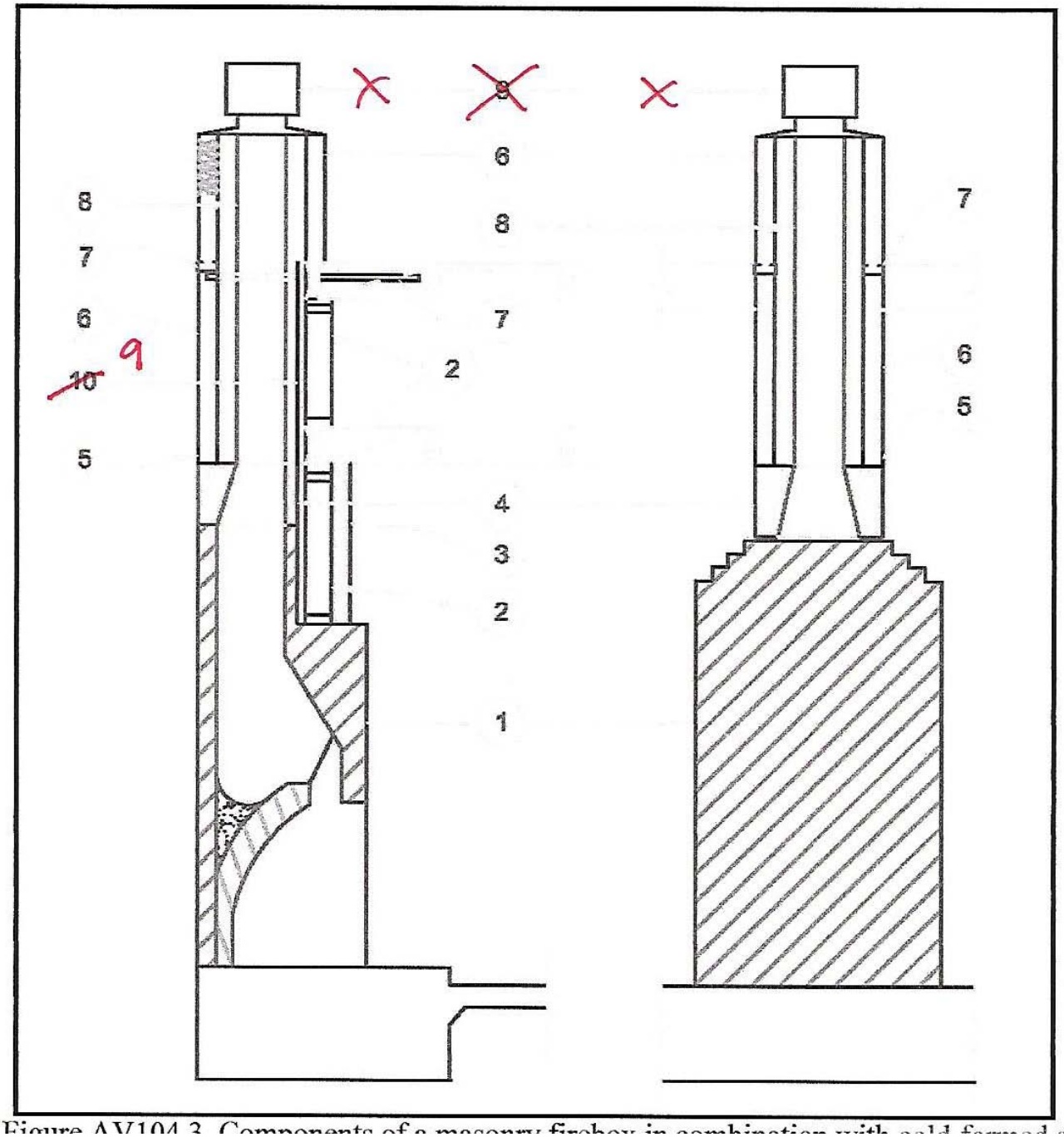

Figure AV104.3. Components of a masonry firebox in combination with cold-formed st

See Section AV104.4 for numbered items.

AV104.4 Reconstruction. Reconstruction shall be in accordance with the following requirements, the factory-built chimney manufacturer's installation instructions, and Figure AV104.3. Item numbers below correspond to Figure AV104.3.

1. Masonry firebox. The existing masonry firebox shall remain up to the top of the smoke chamber as shown in Figure AV104.3.
2. Existing framing. Existing roof, wall, and ceiling framing shall remain. Existing framing shall be re-supported in accordance with applicable requirements of this code where existing support is disrupted.
3. Masonry veneer. Where existing masonry veneer is disrupted, re-support and anchorage of masonry veneer shall be provided in accordance with the requirements of this code.
4. Smoke chamber-to-chimney transition. The transition from the smoke chamber to the ~~metal~~ factory-built chimney shall be in accordance with Section AV104.5.
5. Track or sill plate. Cold-formed steel track sections matching the thickness of the studs shall be provided at the bottom of cold-formed steel chimney chase walls. Wood sill or ~~bottom (~~sole~~)~~ plates, having a width not less than the supported studs, shall be provided at the bottom of wood chimney chase walls. Wood sill or ~~bottom~~ sole plates shall be protected

against decay in accordance with Section R317.1. Fasteners in contact with wood sill or ~~bottom~~ sole plates shall be in accordance with Section R317.3. Tracks and sill or sole plates shall be anchored to the concrete beam in accordance with Section AV104.5.

6. Chimney chase stud wall. Chimney chases shall be constructed of full-height wood ~~studs~~ stud walls in accordance with Section R602 or full-height cold-formed steel ~~studs~~ stud walls in accordance with Section R603. Studs shall be selected based on story clear height, but not less than eight feet~~, and applicable Section R301.2 wind criteria~~. Wood studs shall be not less than nominal 2 inch by 3 inch and spaced not more than 12 inches on center. Cold-formed steel studs shall be not less than 43 mil thickness by 2-1/2 inch deep and spaced not more than 12 inches on center. The top of the chimney chase shall extend not less than three feet above the edge of roof and not less than two feet above the maximum roof elevation, or maximum elevation of other construction located within a ten foot horizontal dimension in any direction from the chimney. ~~Where this requires~~ Chimney ~~that the chimney~~ chase ~~extend more than four feet above the highest roof elevation immediately adjacent to the chimney,~~ bracing ~~of the chimney chase~~ shall be ~~provided~~ in accordance with Section AV104.6. The chimney chase shall be capped. roofing and flashing, where applicable, shall be in accordance with Chapter 9 of this code.
7. Chimney chase connection to dwelling. The chimney chase studs shall be fastened to the existing dwelling exterior wall with minimum No. 8 wood screws at 12 inches on center. The chimney chase framing shall be strapped to existing floor, ceiling and roof framing with not less than two steel straps not less than 1-1/4 inches minimum in width and 33 mil minimum in thickness, on two opposing sides of the chimney. The steel straps shall be fastened to steel blocking between steel studs with minimum four No. 8 sheet metal screws, or to wood blocking between wood studs with not less than four 8d common nails. the steel straps shall be fastened to existing wood floor, ceiling or roof framing with not less than four 8d common nails, or to existing steel framing with not less than four No. 8 sheet metal screws.
8. Factory-built metal chimney. Factory-built metal chimneys shall be in accordance with UL 103, sized in accordance with Section R1003.15, and installed in accordance with Section R1005.

~~9. Flue cap. Where required by the metal chimney manufacturer, a flue cap shall be installed, complying with the metal chimney's listing.~~

9. ~~Fireblocking~~ Fire blocking. ~~Fireblocking~~ Fire blocking between the chimney chase and the attic shall be ~~installed~~ provided as required by Section R302.11.

AV104.5 Smoke chamber-to-chimney transition. The transition from the masonry smoke chamber to the factory-built metal chimney and chimney chase shall be in accordance with the factory-built chimney manufacturer's installation instructions, the following requirements and Figure AV104.5.

1. A 12 gauge (97 mil) minimum thickness galvanized sheet steel transition cone shall be provided, as shown in Figure AV104.5. The transition cone shall have minimum 12 gauge (97 mil) thickness sheet steel top and bottom plates, and shall provide a smooth-surfaced transition between the flue opening at the top of the firebox and the masonry fireplace adapter ~~anchor plate~~ and ~~metal~~ factory-built flue. The bottom plate geometry shall match the opening geometry at the top of the smoke chamber, and the top plate geometry shall be coordinated with the ~~UL~~ listed ~~anchor plate~~ masonry fireplace adapter. The transition cone shall be set in cementitious grout, and all transition cone seams shall be continuously welded.
2. The transition cone base plate shall be anchored to the firebox masonry with not less than four 1/2-inch diameter galvanized threaded rod anchors, as shown in Figure AV104.5. The threaded rods shall be extended to one inch below the top of the concrete beam, shall be embedded six inches into masonry at the firebox, and shall be set in cementitious grout.
3. Reinforcing steel (rebar) and a concrete beam shall be constructed around the transition cone, using the cone as the inside form in accordance with Figure AV104.5. Not less than a 1-1/2-inch clear distance shall be provided between the rebar and outside face of concrete.

~~4. Mineral insulation shall be installed on top of the transition cone top plate as shown in Figure AV104.5 where required by the anchor plate manufacturer.~~

~~5. A fireplace adapter (chimney anchor plate), tested in accordance with UL 103a, shall be installed in accordance with the manufacturer's installation instructions.~~

4. A masonry fireplace adapter, tested in accordance with UL 103A and listed for use with the specific factory-built chimney, shall be installed in accordance with the manufacturer's installation instructions.

FIGURE AV104.5
Masonry smoke chamber to chimney and chimney chase transition.

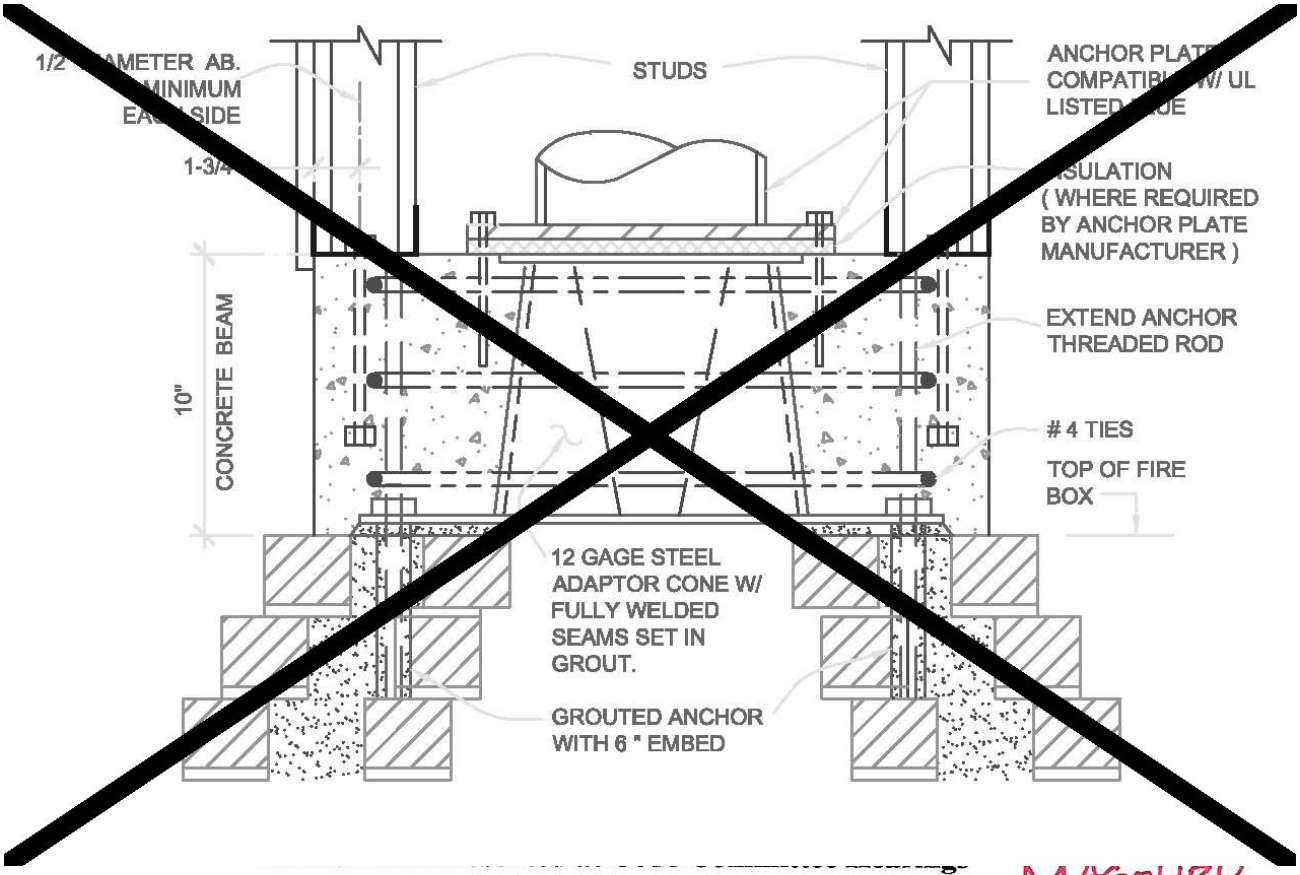

Revised July 16, 2016

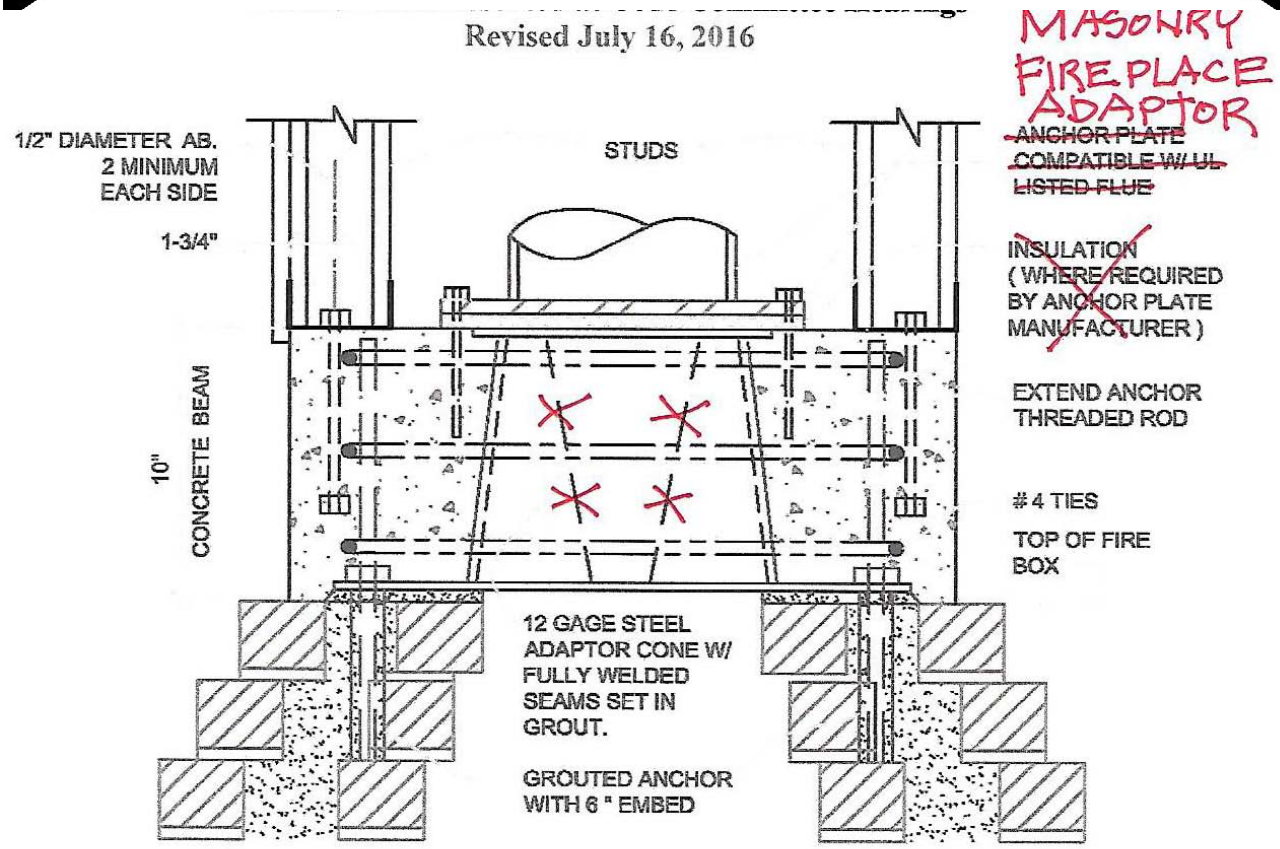

AV104.6 Chimney chase bracing to roof. Where ~~bracing of~~ chimney chase stud walls extend more than four feet above the highest roof elevation immediately adjacent to the chimney ~~chase is required by Section AV104.4~~, ~~Item 6, the~~ bracing shall be provided in accordance with this section. The bracing shall be connected to the chimney chase in the upper third of the

chimney chase clear height above the roof (H), in accordance with Figures AV104.6(1) and AV104.6(2). Bracing steel angles not less than 2-1/2x2-1/2x1/4-inch shall be provided at not less than two locations. The bracing slope shall be no less than 30 degrees and not more than 60 degrees from vertical.

AV105.2 Limitations. The following limitations apply to this section:

1. Use of these provisions on a damaged chimney is limited to chimneys in which damage only occurs above the transition from smoke chamber to chimney. A chimney and firebox inspection indicating extent of damage shall be submitted with the permit application.
2. Use of these provisions is limited to chimneys occurring at the exterior wall of dwellings. Chimneys completely interior to the dwelling are beyond the scope of this chapter.
3. ~~Where the exterior walls adjacent to the chimney are required to be fire-rated, chimney chase construction shall confirm to the requirements of Section R302.~~

AV105.5 Smoke chamber-to-chimney transition. The transition from the masonry smoke chamber to the ~~metal~~ factory-built chimney and chimney chase shall be in accordance with the following requirements and Figure AV105.5.

1. A 12 gauge (97 mil) thickness minimum galvanized sheet steel transition cone shall be provided as shown in Figure AV105.5. The transition cone shall have minimum 12 gauge (97 mil) thickness sheet steel top and bottom plates, and shall provide a smooth-surfaced transition between the flue opening at the top of the firebox and the ~~anchor plate~~ masonry fireplace adapter and ~~metal~~ factory-built flue. The bottom plate geometry shall match and allow for attachment of the factory-built insert chimney liner. The top plate geometry shall be coordinated with the UL listed ~~anchor plate~~ masonry fireplace adapter. The transition cone shall be set in cementitious grout, and all transition cone seams shall be continuously welded.
2. The transition cone base plate shall be anchored to the firebox masonry with not less than four 1.2-inch diameter galvanized threaded rod anchors, as shown in Figure AV104.5. The threaded rods shall be extended to one inch below the top of the concrete beam, shall be embedded six inches into the masonry at the firebox, and shall be set in cementitious grout.
3. Reinforcing steel (rebar) and a concrete beam shall be constructed around the transition cone, using the cone as the inside form in accordance with Figure AV104.5. Not less than a 1-1/2 inch clear distance shall be maintained between rebar and the outside face of concrete.
4. The listed insert, chimney liner, chimney, and accessories shall be installed in accordance with the manufacturer's instructions and the listing. Clearances required by the manufacturer and the listing shall be maintained.

FIGURE AV105.5

Transition from masonry smoke chamber to factory-built chimney where factory-built fireplace insert is used.

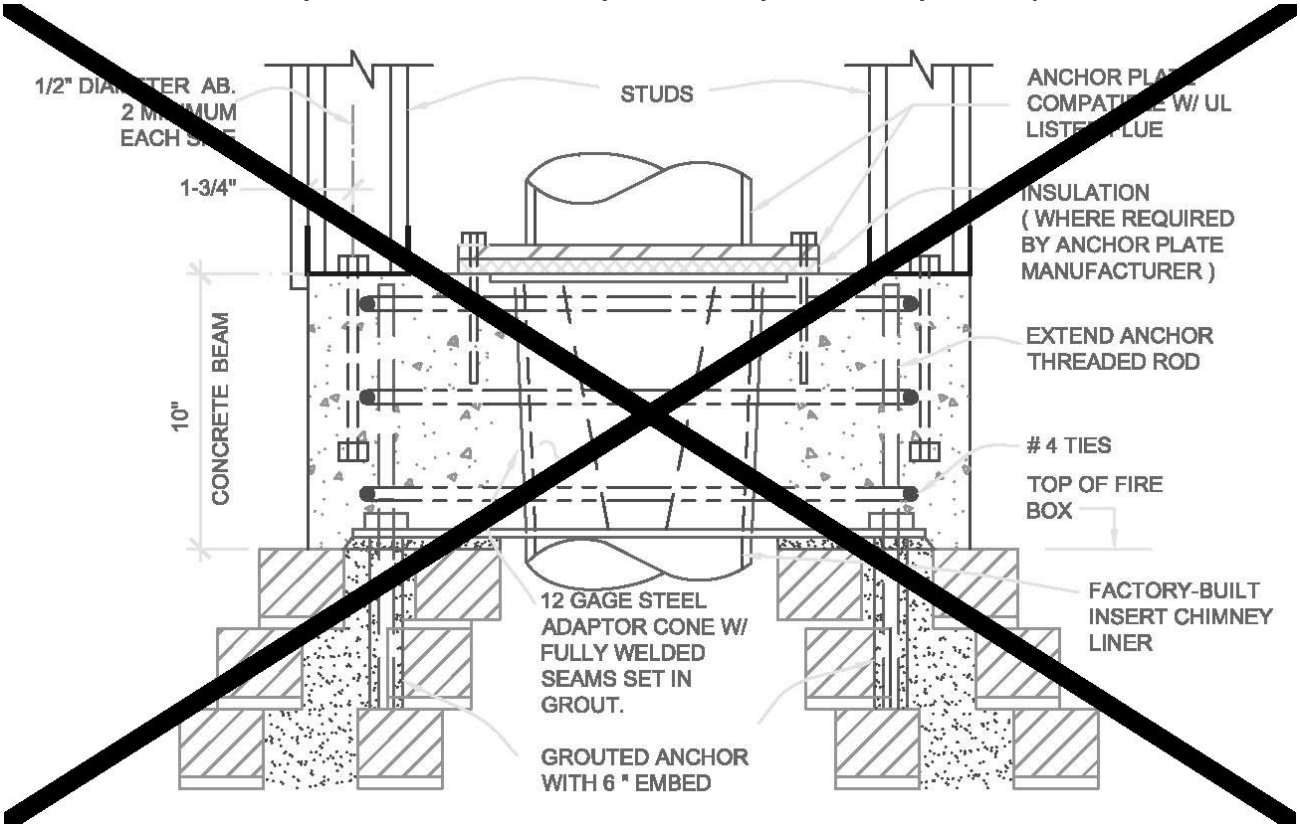

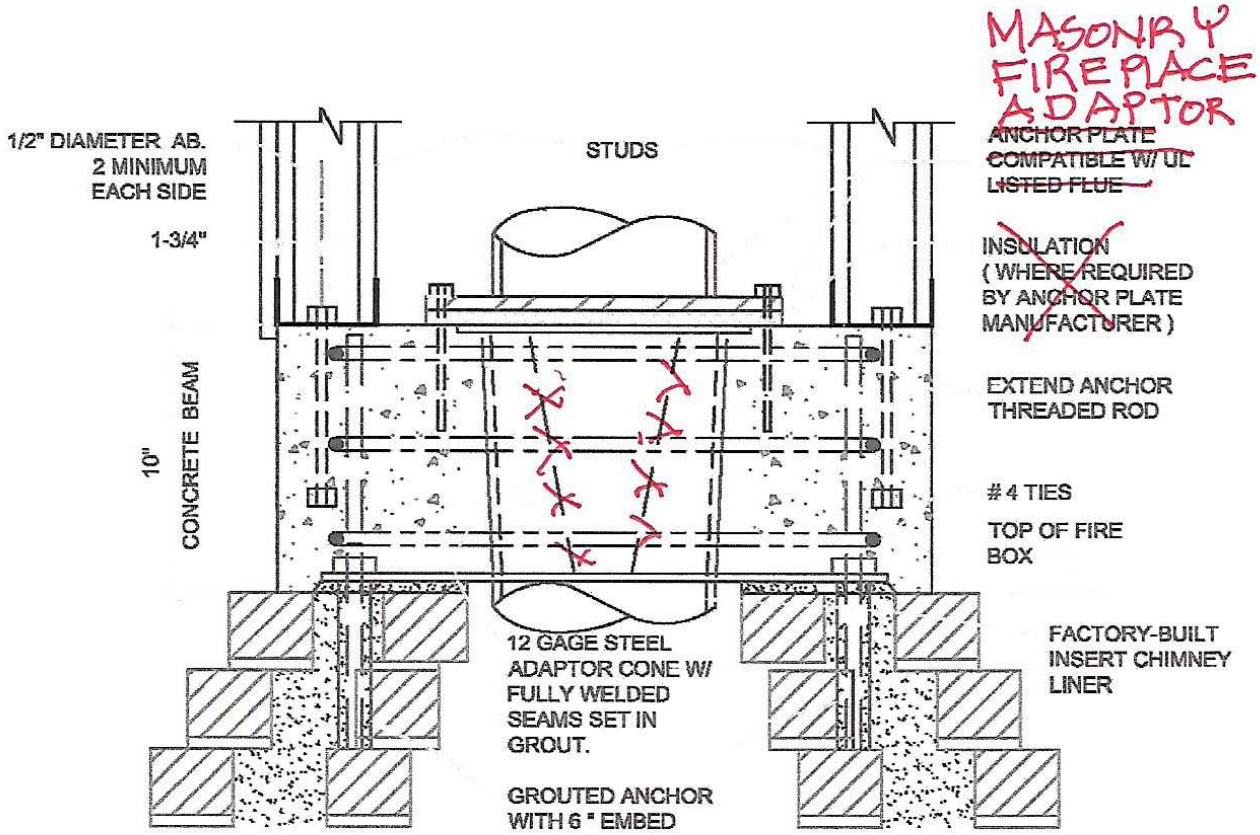

AV106.2 Limitations. ~~The following limitations apply~~ Use of these provisions is limited to chimneys occurring at the exterior walls of dwellings. Chimneys completely interior to the dwelling are beyond the scope of this section~~:~~ .

1. ~~Use of these provisions is limited to chimneys occurring at the exterior walls of dwellings. Chimneys completely interior to the dwelling are beyond the scope of this chapter.~~
2. ~~Where the exterior walls adjacent to the chimney are required to be fire-rated, chimney chase construction shall confirm to the requirements of Section R302.~~

AV106.4 Reconstruction. Reconstruction shall be in accordance with the factory-built fireplace manufacturer's installation instructions, the following requirements and Figure AV106.4. Item numbers below correspond to Figure AV106.4.

1. Existing foundation. ~~Where a~~ An existing concrete ~~footing exists, use of~~ foundation in good condition shall be permitted to be retained and incorporated into the ~~concrete footing shall not be prohibited~~ new construction. Where the existing footing is other than concrete, the footing shall be removed and replaced in accordance with Chapter 4.
2. Extension of existing foundation. Where required to meet dimensional requirements specified by the fireplace manufacturer, the existing concrete footing shall be extended as shown in Figure AV106.4. Where footing extension is required, the depth of the new footing shall match the depth of the existing foundation, however the bottom of the footing extension shall not be less than 12 inches below grade. The foundation extension shall be reinforced with one No. 4 bar at the top and bottom of new concrete, and adhesive dowels to the existing footing at not more than 12 inches on center. See the applicable provisions of this code for additional requirements.
3. Non-combustible hearth extension. Where required to meet the manufacturer's requirements or fireplace listing, a hearth extension ~~confirming to~~ listed and labeled in accordance with UL 1618 shall be installed.
4. Factory-built fireplace. The factory-built fireplace shall comply with Section R1004.
5. Chimney chase stud walls. In single-story dwellings the studs shall extend full height from the foundation to the top of the chimney chase. In two-story dwellings the studs shall extend full-height from the second floor to the top of the chimney chase. Wood stud walls shall be constructed in accordance with Section R602. Cold-formed steel stud walls shall be constructed in accordance with Section R603. The top of the chimney shall extend not less than three feet above the roof and not less than two feet above the elevation of the roof or other construction within a ten foot dimension. ~~Where this requires that the chimney~~ Chimney chase ~~extend more than four feet above the highest roof elevation immediately adjacent to the chimney,~~ bracing ~~of the chimney chase~~ shall be provided in accordance with Section ~~AV104.6~~ AV104.6.Where the exterior walls adjacent to the chimney are required to be fire-rated, chimney chase stud walls shall comply with Section R302. The chimney chase shall be capped. Roofing and flashing, where

applicable, shall be in accordance with Chapter 9 of this code.

6. Existing wall framing. Where existing wall framing requires modification to accommodate the new fireplace opening, framing shall be reconstructed in accordance with applicable requirements of Chapter 6.
7. Factory-built ~~metal~~ chimney. A listed and labeled factory-built ~~metal~~ chimney supplied by the fireplace manufacturer shall be installed in accordance with the monufacturer's installation instructions and listing.
8. Stud blocking. Continuous blocking shall be installed at 4'-0" maximum vertical spacing. Blocking size shall match studs.
9. Chimney chase connection to dwelling. The chimney chase studs shall be fastened to the existing residence exterior wall with not less than No. 8 wood screws at 12 inches on center. The chimney chase framing shall be strapped to the existing floor, ceiling, and roof framing with not less than two steel straps at each location. The steel straps shall be not less than 1-1/4-inch minimum by 33 mil minimum in thickness, and installed on two opposing faces of the chimney chase. The steel straps shall be fastened to steel blocking between steel studs with not less than four No. 8 sheet metal screws, or to wood blocking between wood studs with not less than four 8d common nails. The steel straps shall be fastened to existing wood floor, ceiling, or roof framing with minimum four 8d common nails or the existing steel framing with not less than four No. 8 sheet metal screws.
10. Existing roof, ceiling and floor framing. Existing roof, ceiling and floor framing shall remain. Existing framing shall be re-supported in accordance with applicable requirements of this code where existing support is disrupted.

~~11. Chimney chase. The chimney chase shall be constructed as required in item 6.~~

~~12. Chimney cap. A framed chimney cap shall be constructed at the top of the chimney chase.~~

~~13. Flue cap. Where required by the factory-built fireplace manufacturer, a flue cap shall be installed, complying with the fireplace listing.~~

11. ~~Fireblocking~~ Fire blocking. ~~Fireblocking~~ Fire blocking between the chimney chase and the attic or second floor framing shall be ~~installed~~ provided as required by Section R302.11.

FIGURE AV106.4

Components of a reconstructed fireplace and chimney with factory-built fireplace in chimney chase.

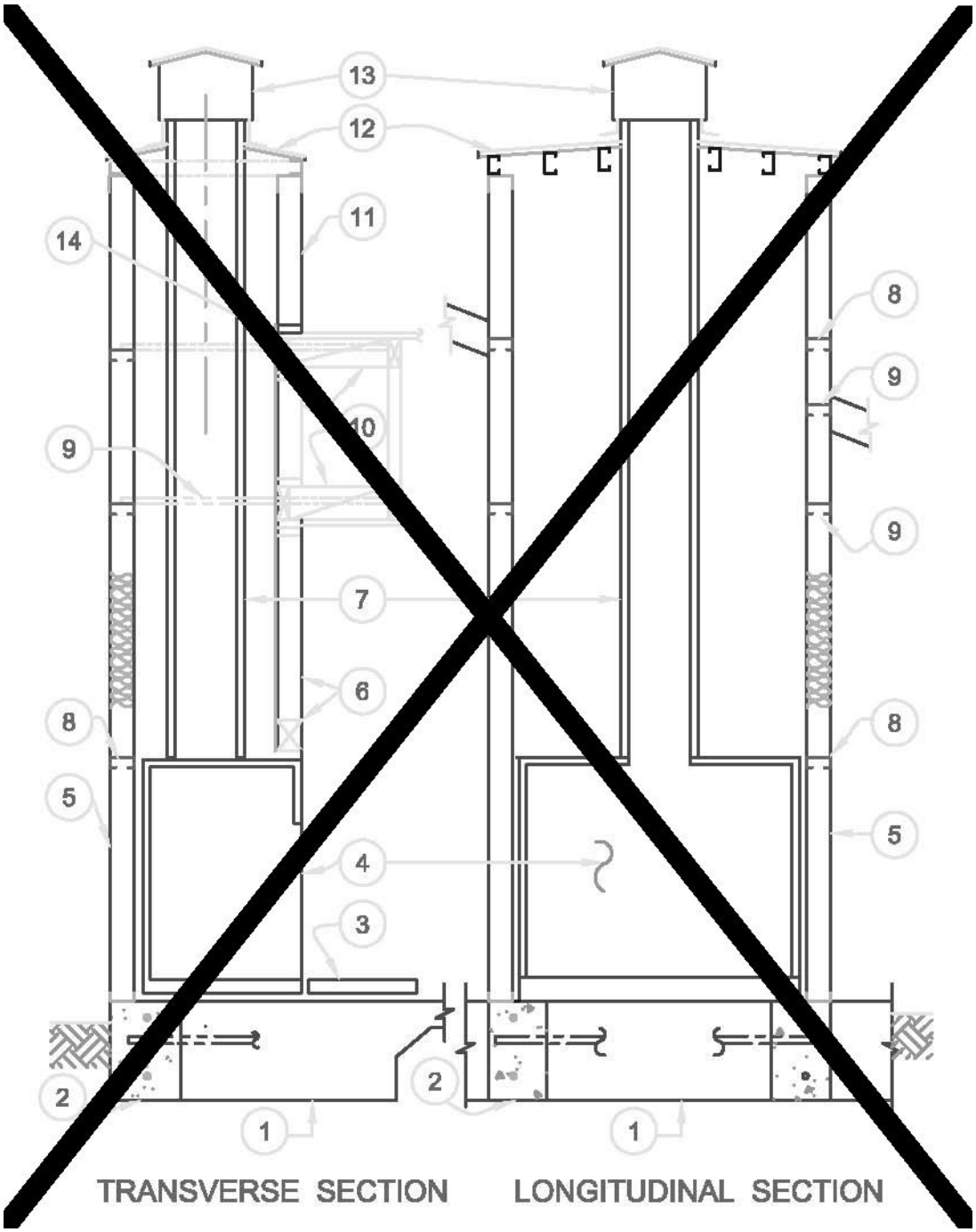
13
12
11
14
8
9
10
9
9
7
6
8
8
5
5
4
3
2
2
1
1
TRANSVERSE SECTION
LONGITUDINAL SECTION

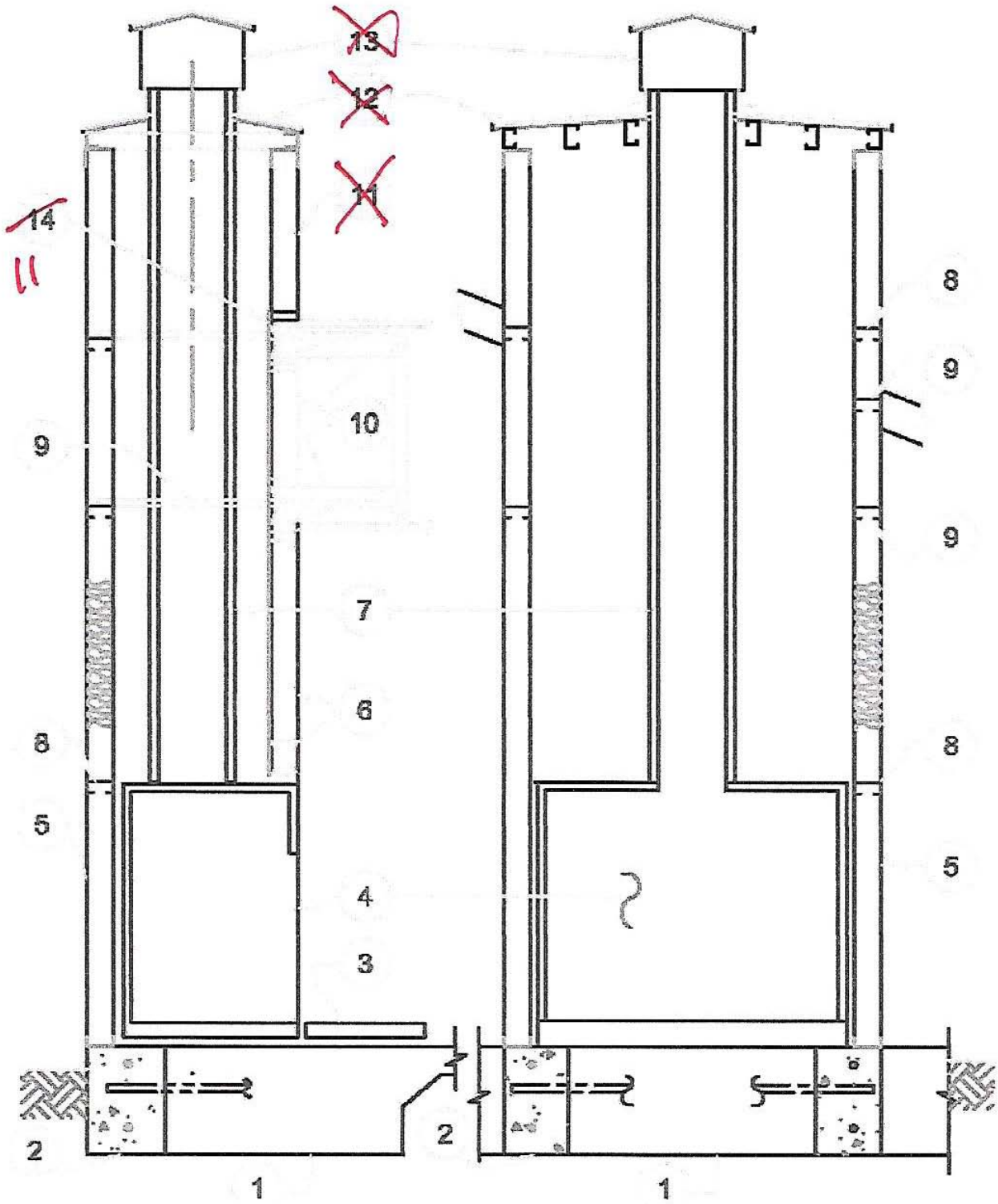

TRANSVERSE SECTION LONGITUDINAL SECTION

SECTION AV107 PARTIAL REPAIR OF MASONRY CHIMNEY USING NEW MASONRY CONSTRUCTION

AV107.1 Scope The section provides criteria for identifying existing masonry chimneys for which partial repair with new masonry construction is permitted.

AV107.2 Limitations The following limitations apply to this section:

1. use of the provisions of this section on a damaged chimney is limited to chimneys in which damage only occurs above the

smoke chamber to chimney transition. A chimney and firebox inspection indicating extent of damage shall be submitted with the permit application.
2. Use of the provisions of this section is limited to chimneys for which existing construction to remain is verified to be in accordance with the requirements of this code for new construction. Such verification shall include but not be limited to:
a. Verification that reinforcing and grout conform to the requirements of Section R1003.3, and
b. Verification that seismic anchorage conforms to the requirements of Section R1003.4, including connection of straps to each floor, ceiling and roof, and embedment of the straps into grout.

AV107.3 Repair Existing damaged construction shall be removed and shall be reconstructed in accordance with the requirements of this code for new construction. Deteriorated mortar in masonry to remain shall be repointed.

Commenter's Reason: This public comment modifies the originally submitted proposal in response to comments and concerns voiced by NAHB, UL, NCSEA and masonry industry representatives. While this has resulted in a number of modifications, many are editorial in nature and the modified proposal does not vary significantly in technical content from the originally submitted proposal. Some of the primary modifications include:
General - Terminology has been revised for consistency with common industry terms. A broad requirement to comply with the minufacturer's installation instructions has been added for all factory-built components.

AV101.1 - For clarity, it is noted that either engineered design in accordance with the IBC or alternate methods of construction can be provided. While this is always true, it was decided that this should be emphasized at the beginning of this chapter. Use of an engineered design will make available additional approaches to repair or retrofit, including some more consistent with historic preservation objectives. The details of these additional engineered approaches fall beyond what can be incorporated in a prescriptive code such as the IRC.

AV101.3 - For clarity, available methods for repair and for retrofit have been differentiated. In response to masonry industry concerns, partial or full reconstruction using masonry rather than light-frame construction have been incorporated.

AV103.2 - The requirement that the firebox be blocked when the chimney is capped has been relocated to AV103.3.1.

AV103.3 - A range of chimney heights above the roof is permitted to provide reasonable tolerances. The option to remove interior chimneys to a ceiling or attic floor has been added.

AV103.3.1 - this provision is relocated from AV103.2.

AV103.3.2 - This provision is added to address circumstances where combustion products from heaters or other appliances are routed through the existing masonry chimney and must be relocated as part of the repair or retrofit work.

AV104.2, Item 3 - Relocated to AV 104.4, Item 6.

AV104.4, Item 6 - Third from last sentence is relocated to AV104.6. Last sentence is relocated from AV104.2.

AV104.4, Item 8 - Factory-built chimney sizing in accordance with Section R1003.15 has been added for completeness.

AV104.4, Item 9 - Discussion of flue cap is deleted as this will be part of the listed factory-built chimney.

AV104.5, Item 4 - Discussion of insulation is deleted. If required, this will be part of the manufacturer's installation instructions.

AV104.5, Item 5 - Clarifies that the masonry fireplace adapter much be listed for use with the specific factory-built chimney to be used.

AV104.6 - First sentence is relocated from AV104.4, Item 6.

AV105.2, Item 3 - Relocated to AV104.4, Item 6.

AV106.2, Item 2 - Relocated to AV 106.4, Item 6.

AV106.4, Item 1 - Editorially revised.

AV106.4, Item 5 - Third sentence from last relocated from AV106.2.

AV106.4, Item 11 - Deleted because redundant.

AV106.4, Item 12 - Relocated to AV106.4, Item 6.

AV106.4, Item 13 - Deleted as cap will be part of factory-built fireplace assembly.

AV107 - This section is added in response to concerns raised by the masonry industry. It permits partial reconstruction of the chimney above the top of firebox to chimney transition, provided that the existing construction to remain can be verified to be in accordance with current code requirements. The verification includes items important to seismic performance. Limited openings in existing construction are anticipated to be required to permit verification

In recent moderate to major earthquakes, widespread damage has occurred to masonry chimneys and fireboxes. As a result, jurisdictions have needed to provide direction for repair of earthquake-damaged chimney and fire boxes. Following the moderate 2014 South Napa Earthquake, inspections revealed that over 1000 masonry chimneys suffered some form of collapse or significant damage. What made this earthquake damage unique was that many of these same chimneys had suffered the very same damage in the 2000 Yountville Earthquake and had been repaired to their original condition after that event. One of the observations of a FEMA-funded study on building performance was that simple repair of earthquake

sensitive items such as heavy masonry chimneys was to doom these components to failure in future earthquakes. Further, recent environmental regulations on the use of fireplaces has led many homeowners to ask about capping and abandoning their fireplaces. To address these concerns, FEMA funded the development and publication of a Recovery Advisory (FEMA P-1024) addressing recommendations for repair of earthquake damaged chimneys and fireboxes. This code change is drawn from that Recovery Advisory.

RB372-16

RB373-16

Appendix V (New), AV101 (New), AV102 (New), AV103 (New)

Proposed Change as Submitted

Proponent : Jay Crandell, P.E., ARES Consulting, representing Foam Sheathing Committee of the American Chemistry Council (jcrandell@aresconsulting.biz)

2015 International Residential Code

Add new text as follows:

APPENDIX V

ALTERNATIVE INSULATION R-VALUES AND VAPOR RETARDER APPLICATIONS FOR ABOVE-GRADE WOOD-FRAME WALLS

SECTION AV101 GENERAL

AV101.1 General. Insulation component R-value alternatives to those specified in Table N1102.1.2 and vapor retarder application alternatives to those specified in Section R702.7 for above-grade wood-frame walls shall comply with Table AV101.1, or Sections AV102 and AV103.

TABLE AV101.1
VAPOR RETARDER AND INSULATION COMPONENT R-VALUE ALTERNATIVES FOR ABOVE-GRADE WOOD FRAME WALLS

CLIMATE ZONE	WALL INSULATION COMPONENTS[a,b,c,d] (cavity + continuous)		MINIMUM STUD SIZE	VAPOR RETARDER APPLICABILITY[e,f]		
	Insulation R-value			Vapor Retarder Class		
	Cavity	Continuous		Class I	Class II	Class III
Cavity Insulation Permeance Greater than 1.5 Perms						
1,2	13	0	2x4	NA	NA	AS
	0	8.5				
3,4,5	20	0	2x6	See Table AV103(1)		
	15	3.4	2x4	AS (Climate Zone 5 only)	AS	AS (except R-15+3.4ci in Climate Zone 5 not permitted)
	13	4.3				
	0	13.2				
6	30	0	2x8	See Table AV103.1(1)		
	20	4.8	2x6	AS	AS	See Table AV103.1(2)
	15	8.5	2x4			AS
	13	9.6				
	0	18.7				
7,8[g]	30	0	2x8	See Table AV 103.1(1)		
	20[h]	4.8[h]	2x6	AS	AS	See Table AV103.1(2)
	15	8.5	2x4			
	13	9.6				
	0	18.7				AS
Cavity Insulation Less Than or Equal to 1.5 Perms at Installed Thickness						
1,2	13	0.0	2x4	NA	NA	AS[i]
	5	4.5				
	3	6.0				
3,4,5	20	0.0	2x6	AS[i] (Climate Zone 5 only)	AS[i]	AS[i]
	16	3.0	2x4			
	12	4.8				
	8	7.2				
	4	10.0				
6,7,8[g]	38	0.0	2x6	AS[i]	AS[i]	AS[i]

	20	4.8				
	17	7.5	2x4			
	13	9.6				
	5	14.8				

a. Table component R-value combinations comply with Table N1102.1.4 and are based on calculation in accordance with Section AV102 with wood studs spaced at 16 inches on center (framing factor of 25%). Interpolation of cavity and continuous insulation component R-values shall be prohibited.
b. Cavity and continuous insulation components, where included, shall be combined as indicated in the table. An R-value of zero '0' indicates that either no continuous insulation or no cavity insulation is required.
c. Indicated R-values for continuous insulation are minimums that can be exceeded where product availability results in the installation of greater R-values. Where R-values for continuous insulation are shown as '0' for cases with cavity insulation greater than 1.5 perms, any increase in the continuous insulation R-value shall comply with Table AV103.1(2).
d. Where insulation components are continuous insulation only (no cavity insulation), a separate vapor retarder shall not be required where the water vapor permeance of the continuous insulation product or a continuous material layer towards the interior side of the continuous insulation is not greater than 1 perm.
e. NA -- vapor retarder not applicable to the indicated Climate Zone.
f. AS -- acceptable solution deemed to comply with Sections AV102 and AV103 for the indicated vapor retarder and wall insulation condition.
g. Where the site-specific heating degree day value is greater than 16,200 (65°F basis) [9,000 (18°C basis)], a design shall be required to determine an acceptable solution.
h. For applications in Climate Zone 7 where the heating degree day value (65°F basis) exceeds 9,900 and in Climate Zone 8, the minimum amount of continuous insulation shall be increased to R-7.0ci and R-10.0ci, respectively. Alternatively, closed-cell spray foam applied to not less than R-7 to the interior face of the exterior sheathing plus additional cavity insulation to achieve a total cavity insulation component R-value of R-20 shall be provided.
i. Where the cavity insulation permeance at the installed thickness is not greater than 1 perm, or where the continuous insulation permeance is not greater than 1 perm, a vapor retarder as indicated in the table shall not be required.

SECTION AV102 ALTERNATE R-VALUE SOLUTIONS

AV102.1 Alternate R-value solutions (calculation method). Alternate component insulation R-values shall be determined in accordance with this section for above-grade wood frame walls.

AV102.2 Criteria. Alternate R-value solutions shall result in a total assembly U-factor that does not exceed the maximum U-factors required in Table N1102.1.4 except as determined in accordance with Section N1102.1.5. The U-factor calculation method shall comply with Section AV102.2.

AV102.3 Calculation method. The method of calculation of U-factors for an alternate R-value assembly shall be the parallel-path method in accordance with Chapter 27 of the ASHRAE *Handbook of Fundamentals* or an other approved method. All of the following R-values for insulation components and other materials in the assembly shall apply:

1. Cavity insulation component R-value shall comply with Section N1101.10.4.
2. Continuous insulation component R-value shall comply with Section N1101.10.4.
3. Exterior air-film shall be R-0.17.
4. Interior air-flim shall be R-0.68.
5. Cladding R-value shall be based on an *approved* source. Where cladding is insulated siding, the R-value shall comply with Section N1101.10.4.
6. Exterior sheathing shall be R-0.62 for 7/16 inch OSB or other sheathing material having a R-value based on an approved source.
7. Airspace R-value shall comply with Appendix A, Section 9.4 and Addendum AC of ASHRAE 90.1.
8. Wood framing (headers & studs) shall be R-1.25 per inch for spruce-pine-fir wood framing or R-value data from an *approved* source for other species of wood or for engineered wood framing.
9. Interior finish shall be R-0.45 for 1/2 inch gypsum board or other material with R-value based on an *approved* source.

SECTION AV103 INSULATION PLACEMENT AND WATER VAPOR CONTROL

AV103.1 Insulation placement and water vapor control. The location and properties of insulation components, vapor retarders, and other material layers on the wall assembly shall comply with Table AV103.1(1) or Table AV103.1(2). Alternatively, the wall assembly shall be designed in accordance with accepted engineering practice for hygrothermal analysis.

TABLE AV103.1(1)
MINIMUM WATER VAPOR PERMEANCE (WVP)
FOR MATERIAL LAYERS LOCATED ON THE EXTERIOR SIDE OF WALL STUDS [a,b,c]

CLIMATE ZONE	Class I Vapor Retarder	Class II Vapor Retarder	Class III Vapor Retarder
1	Class I not applicable	Class II not applicable	No minimum WVP
2	Class I not applicable	Class II not applicable	No minimum WVP
3	Class I not applicable	No minimum WVP	No minimum WVP
4	0.5 perm (Marine 4 only) otherwise Class I not applicable	0.5 perm	3 perm
5	0.5 perm	3 perm	5 perm
6	1 perm	5 perm	15 perm
7	1 perm	15 perm	Not permitted
8[d]	1.5 perm	Not permitted	Not permitted

For SI: 1 perm = 57.2 ng/s-m^2-Pa

a. The WVP of materials on the exterior side of the wall studs shall be determined, for the purpose of compliance with this table, using Method A ('dry cup') or Method B ('wet-cup') of ASTM E96.

b. Where there is more than one layer to the exterior side of wall studs, the net WVP of the layers comprising the exterior wall covering assembly, excluding vented claddings, shall be determined using the following equation:

Net WVP = 1/[1/perm1 + 1/perm2 + 1/perm3 + 1/permX....], **Equation AV-1**

where,

Net WVP is in units of perms and

'permX' is the WVP of each individual layer, exterior to the wall studs.

Perm ratings for each material layer shall be based on *approved* test data representative of the actual product, including all component layers of composite products.

c. As an alternative to Table AV103.1(2), exterior continuous insulation of any thickness shall comply with this table and shall be considered in accordance with note b.

d. The WVP requirement for Climate Zone 8 is based on a maximum 16,200 heating degree days (65°F basis) [9,000 heating degree days (18°C basis)]. Where this heating degree day limit is exceeded, a design shall be required to determine the minimum required water vapor permeance for materials on the exterior side of the assembly.

TABLE AV103.1(2)

MINIMUM INSULATION RATIO FOR WOOD-FRAME WALLS WHERE EXTERIOR CONTINUOUS INSULATION (ci) IS USED [a,b,c]

CLIMATE ZONE	MAXIMUM HEATING DEGREE DAYS (65°F basis)	Class I Vapor Retarder	Class II Vapor Retarder	Class III Vapor Retarder
1	-	Class I not permitted	Class II not permitted	R-2ci minimum
2	-	Class I not permitted	Class II not permitted	R-2ci minimum
3	3,600	Class I not permitted	R-2ci minimum	R-2ci minimum
4	5,400	Class I not permitted	R-2ci minimum	0.2
5	7,200	0.2	0.2	0.35
6	9,000	0.2	0.2	0.5
7	12,600	0.35	0.35	0.8
8[d]	16,200[d]	0.5	0.5	1.1

For SI: 1 heating degree day (65°F basis) = 0.56 heating degree days (18°C basis)

a. Insulation ratio is the exterior continuous insulation R-value divided by the cavity insulation R-value.

b. Interpolation of insulation ratios using a site-specific heating degree day value shall be permitted.

c. In addition to the vapor retarder, spray foam with a permeance not greater than 1.5 perms at the installed thickness and applied to the interior side of wood structural panels, fiberboard, insulating sheathing or gypsum board, complies with the insulation ratio requirement provided that the spray foam R-value plus continuous insulation R-value, if any, meets or exceeds the R-value requirement for continuous insulation using the tabulated insulation ratios.

d. The minimum insulation ratios for Climate Zone 8 are based on a maximum 16,200 heating degree days (65°F basis) [9,000 heating degree days (18°C basis)]. Where this heating degree day limit is exceeded, a design shall be required to determine

the minimum required insulation ratio.

Reference standards type: This reference standard is new to the ICC Code Books
Add new standard(s) as follows:

TO BE ADDED TO APPENDIX AV ONLY;

ASHRAE 90.1 - 2013 Energy Standard for Buildings Except Low-Rise Residential Buildings

Reason:
This proposal provides a prescriptive application (Section AV101) of water vapor retarders corresponding with a variety of insulation strategies to provide a simple and reliable means of addressing the important inter-relationship between the energy code (Chapter 11) and building code (Section R702.7) for energy efficiency and water vapor control. This prescriptive "menu-driven" approach (Table AV101.1) is coupled with a transparent and flexible design method to determine assembly U-factors for energy code compliance (Section AV102) and insulation ratios or permeance requirements for water vapor control purposes (Section AV103). Thus, a full gambit of non-material-biased prescriptive solutions and alternative solutions are made available to code users. Builders, designers and code officials will be able to readily achieve or verify code compliant wall assemblies in a coordinated and reliable fashion. The proposal is offered as an informative appendix that is adoptable at the election of individual states and answers the call for simplicity yet comprehensive and effective solutions with essentially unlimited flexibility to optimize wall assemblies to meet a particular need or preference. It is based on and informed by an extensive review and analysis of available data, codes, and practices in the United States and in Canada (ABTG, 2015).

The builder or designer is able to select a wall (2x4, 2x6, or 2x8) with cavity insulation only of any material type (of low or high permeance) and a variety of vapor retarders suitable to the climate zone with simple verifiation of exterior permeance as needed to avoid moisture problems. Similarly, a wall with cavity insulation plus continuous insulation may be selected using a variety of exterior insulation and cavity insulation materials (again of high or low permeance), each with a specified vapor retarder condition which can be met with a variety of vapor retarder material options. Finally, solutions with exterior insulation only are also provided without material preference, accommodating all types. For cases not addressed in the prescriptive Table AV101.1, including unique designs, Sections AV102 and AV103 provide a means to develop consistent and equivalent alternate solutions using hygrothermal analysis or a simple design procedure. Several ways of optimizing walls for code compliance and cost-effectiveness are provided while giving assurance (particularly where the code is currently silent) of reliable performance and avoidance of designs that have increased potential of moisture problems.

This proposal fills a number of "gaps" in the code that can lead to unforseen and avoidable moisture problems due to a lack of guidance and appropriate limits to practice. For example, the IRC is currently silent on the matter of coordinating the use of vapor retarders with the vapor permeance of materials on the exterior side of the assembly. Yet, the minimum vapor permeance of exterior materials is known to be important factors in the control of water vapor. Similarly, the IRC does not specify minimum continuous insulation R-values (or insulation ratios) for walls with Class I or II vapor retarders, although the importance of such is well known and currently practiced with success in Canada. These "gaps" in the IRC have become increasingly important with advancements to the energy code (Chapter 11) as well as changes to many common material types used to construct wall assemblies of all types that otherwise can lead to unintended and avoidable consequences. The wall and its component parts must be viewed as a system to achieve reliable performance consistently and this proposal provides a straightforward means of doing so.

While Table AV101 provides a simple prescriptive "look-up" procedure suitable to selection of a wide variety of wall assemblies and materials, Tables AV102 and AV103 do require some modest homework to provide assurance of adequate moisture control (i.e., there is "no free lunch"). Example applications of the design methodology represented in Tables AV103.1(1) and AV103.1(2) are as follows:

TABLE AV103.1(1):

Given: Assume the energy code requires minimum R-20 cavity insulation and the product used is vapor permeable (e.g., fiberglass, cellulose, etc.). Also assume that 7/16" OSB sheathing is used (typical wet cup vapor permeance of ~3.8 perms) together with a 10 perm building wrap and a vented cladding (e.g., anchored brick veneer, vinyl siding, etc.).

Find: What Class of interior vapor retarder is permitted for use with this assembly in Climate Zone 5?

Solution: First, determine the net vapor permeance of the exterior material layers (excluding the vented cladding) in accordance with footnote 'b' of Table AV103.1(1). Thus, net permeance = 1/[(1/3.8)+1/(1/10)] = 1/0.36 = 2.75 perm. This is just under the 3 perm required by Table AV103.1(1) for Climate Zone 5 for use with a Class II vapor retarder. Thus, a Class I vapor retader is required. However, there are alternatives. For example, one could use a sheathing product with a minimum vapor permeance of 4.3 perms or greater (e.g., 1/2" plywood, fiberboard, etc.) which would result in a net vapor permeance of 3.0 perms or greater, allowing use of a Class II vapor retarder. Alternatively, the ~3.8 perm (or greater) OSB can be used with a house wrap material of 15 perms or more instead of 10 perm house wrap as initially tried and this adjustment will allow use of a Class II vapor retarder in Climate Zone 5. Using a non-vented cladding will require similar

adjustments to achieve compliance. This check only needs to be done one time for a given assembly of a specific combination of materials and then it can be used multiple times without repeating the check (kind of a like a standard detail).

TABLE AV103.1(2):

Given: Assume the energy code requires R20+5ci (2x6 wall with R-20 cavity insulation and R5 continuous insulation).

Find: What is the maximum (coldest) permissible climate zone for this wall when using a Class I, II, or III vapor retarder?

Solution: First, determine the insulation ratio, Re/Ri = 5/20 = 0.25. In accordance with Table AV103(2), the maximum/coldest Climate Zone is 6 with a Class I or II vapor retarder and Climate Zone 4 with a Class III vapor retarder. The use of each of these assemblies can be extended into a portion of the next greater climate zone by use of a site-specific heating degree day value in accordance with footnote 'b' of Table AV103.1(2).

Thus, multiple alternative solutions (beyond the many already provided prescriptively in Table AV101) can be quickly and effectively developed using Tables AV103.1(1) or AV103.1(2). These alternate assemblies can then be easily evaluated for energy code compliance following the requirements in Section AV102.

To demonstrate compliance of the prescribed assemblies in Table AV101 with the required U-factors in the energy code (Chapter 11), the following example U-factor calculations are provided:

Climate Zone 1, 2

Wall Thermal Resistance by Component	2 x 4 Wall R-0+R8.5ci	
	R-value Cavity Path	R-value Stud Path
Wall - Outside Winter Air Film[A]	0.17	
Siding - Vinyl [A]	0.62	
Continuous Insulation	8.5	
OSB - 7/16" [A]	0.62	
SPF Stud/Cavity Insulation	0	4.375
1/2 Drywall [A]	0.45	
Inside Air Film [A]	0.68	
16" o.c. Framing Factor [A]	75%	25%
Total Wall R-Values	11.04	15.42
Assembly U-Factor	**0.084**	

[A] 2009 ASHRAE Handbook of Fundamentals

Climate Zone 3, 4, 5

Wall Thermal Resistance by Component	2 x 4 Wall R-15+R3.4ci	
	R-value Cavity Path	R-value Stud Path
Wall - Outside Winter Air Film[A]	0.17	
Siding - Vinyl [A]	0.62	
Continuous Insulation	3.4	
OSB - 7/16" [A]	0.62	
SPF Stud/Cavity Insulation	15	4.375
1/2 Drywall [A]	0.45	
Inside Air Film [A]	0.68	
16" o.c. Framing Factor [A]	75%	25%
Total Wall R-Values	20.94	10.32
Assembly U-Factor	**0.060**	

[A] 2009 ASHRAE Handbook of Fundamentals

Wall Thermal Resistance by Component	2 x 4 Wall R-13+R4.3ci	
	R-value Cavity Path	R-value Stud Path
Wall - Outside Winter Air Film[A]	0.17	
Siding - Vinyl [A]	0.62	
Continuous Insulation	4.3	
OSB - 7/16" [A]	0.62	
SPF Stud/Cavity Insulation	13	4.375
1/2 Drywall [A]	0.45	
Inside Air Film [A]	0.68	
16" o.c. Framing Factor [A]	75%	25%
Total Wall R-Values	19.84	11.22
Assembly U-Factor	0.060	

[A] 2009 ASHRAE Handbook of Fundamentals

Climate Zone 6, 7, 8

Wall Thermal Resistance by Component	2 x 6 Wall R-20+R4.8ci	
	R-value Cavity Path	R-value Stud Path
Wall - Outside Winter Air Film[A]	0.17	
Siding - Vinyl [A]	0.62	
Continuous Insulation	4.8	
OSB - 7/16" [A]	0.62	
SPF Stud/Cavity Insulation	20	6.875
1/2 Drywall [A]	0.45	
Inside Air Film [A]	0.68	
16" o.c. Framing Factor [A]	75%	25%
Total Wall R-Values	27.34	14.22
Assembly U-Factor	0.045	

[A] 2009 ASHRAE Handbook of Fundamentals

Wall Thermal Resistance by Component	2 x 6 Wall R-38+R0.0ci	
	R-value Cavity Path	R-value Stud Path
Wall - Outside Winter Air Film[A]	0.17	
Siding - Vinyl [A]	0.62	
Continuous Insulation	0	
OSB - 7/16" [A]	0.62	
SPF Stud/Cavity Insulation	38	6.875
1/2 Drywall [A]	0.45	
Inside Air Film [A]	0.68	
16" o.c. Framing Factor [A]	75%	25%
Total Wall R-Values	40.54	9.42
Assembly U-Factor	0.045	

[A] 2009 ASHRAE Handbook of Fundamentals

Wall Thermal Resistance by Component	2 x 8 Wall R-30+R0.0ci	
	R-value Cavity Path	R-value Stud Path
Wall - Outside Winter Air Film[A]	0.17	
Siding - Vinyl [A]	0.62	
Continuous Insulation	0	
OSB - 7/16" [A]	0.62	
SPF Stud/Cavity Insulation	30	9.0625
1/2 Drywall [A]	0.45	
Inside Air Film [A]	0.68	
16" o.c. Framing Factor [A]	75%	25%
Total Wall R-Values	32.54	11.60
Assembly U-Factor	0.045	

[A] 2009 ASHRAE Handbook of Fundamentals

Wall Thermal Resistance by Component	2 x 4 Wall R-13+R9.6ci	
	R-value Cavity Path	R-value Stud Path
Wall - Outside Winter Air Film[A]	0.17	
Siding - Vinyl [A]	0.62	
Continuous Insulation	9.6	
OSB - 7/16" [A]	0.62	
SPF Stud/Cavity Insulation	13	4.375
1/2 Drywall [A]	0.45	
Inside Air Film [A]	0.68	
16" o.c. Framing Factor [A]	75%	25%
Total Wall R-Values	25.14	16.52
Assembly U-Factor	**0.045**	

[A] 2009 ASHRAE Handbook of Fundamentals

Bibliography:

ABTG (2015). "Assessment of Water Vapor Control Methods for Modern Insulated Light-Frame Wall Assemblies", Research Report No. ABTG-1410-03, Applied Building Technology Group, LLC, www. appliedbuildingtech.com/rr/1410-03

Cost Impact: Will not increase the cost of construction

This proposal improves clarity and effectiveness of code compliance and provides many options for doing so, such that there is no cost impact to construction other than some minimal effort (if not using one of the prescriptive solutions in AV101) to identify a compliant solution. Alternative solutions also are recognized and not excluded. Thus, no cost impact is anticipated and reduction of long-term costs due to improved resiliency and avoided moisture problems is expected.

RB373-16 :
APPENDIX V-
CRANDELL13318

Public Hearing Results

Committee Action: **Disapproved**

Committee Reason: There is a need for this flexibility in the code however, this information should be put in a standard where the subject can be vetted by people who really know about the details of the subject.

Assembly Motion: **As Submitted**

Online Vote Results: **Failed**

Support: 29.29% (58) Oppose: 70.71% (140)

Assembly Action: **None**

Individual Consideration Agenda

Public Comment 1:

Proponent : Jay Crandell, P.E., ARES Consulting, representing Foam Sheathing Committee of the American Chemistry Council (jcrandell@aresconsulting.biz) requests Approve as Modified by this Public Comment.

Modify as Follows:

2015 International Residential Code

AV101.1 General. Insulation component ~~R-value alternatives~~ R-values ~~to those~~ specified in Table N1102.1.2 and vapor retarder ~~application alternatives to those~~ applications specified in Section R702.7 for above-grade wood-frame walls shall ~~comply~~ be combined in accordance with Table AV101.1, or Sections AV102 and AV103.

TABLE AV101.1

VAPOR RETARDER AND PRESCRIPTIVE INSULATION COMPONENT R-VALUE COMBINATIONS FOR ABOVE-GRADE WOOD FRAME WALLS

CLIMATE ZONE	VAPOR RETARDER (on interior side of wall)	WALL INSULATION COMPONENTS (R-value)			
		2X4 WALLS		2X6 WALLS	
		Cavity	Continuous	Cavity	Continuous
1,2	Class I	NP	NP	NP	NP
	Class II	NP	NP	NP	NP
	Class III	13	0	-	-
3,4	Class I	NP	NP	NP	NP
	Class II	13	5	20	0
	Class III	13	5	20	0
4 Marine	Class I	13	5	20	0
	Class II	13	5	20	0
	Class III	13	5	20	0[a] or 3.75[b]
5	Class I	13	5	20	0
	Class II	13	5	20	0
	Class III	13	5	20	0[a] or 7.5[b]
6	Class I	13	10	20	5
	Class II	13	10	20	5
	Class III	13	10	20	11.25[b]
7	Class I	13	10	20	7 or 5[c]
	Class II	13	10	20	7 or 5[c]
	Class III	13	10	20	15[b]

NP - Not permitted

a. In lieu of continuous insulation, vented cladding over wood structural panels, fiberboard, or gypsum sheathing shall be permitted.

b. In lieu of continuous insulation, spray foam with a maximum permeance of 1.5 perms at the installed thickness, applied to the interior cavity side of wood structural panels, fiberboard, insulating sheathing, or gypsum is deemed to meet the continuous insulation requirement where the spray foam R-value meets or exceeds the specified continuous insulation R-value.

c. R-5 continuous insulation on 2x6 walls with R-20 cavity insulation shall be permitted in Climate Zone 7 where heating degree days do not exceed 10,200.

~~**AV101.1**~~

~~**VAPOR RETARDER AND INSULATION COMPONENT R-VALUE ALTERNATIVES**~~

~~**FOR ABOVE-GRADE WOOD FRAME WALLS**~~

~~**CLIMATE ZONE**~~	~~**WALL INSULATION COMPONENTS[a,b,c,d] (cavity + continuous)**~~		~~**MINIMUM STUD SIZE**~~	~~**VAPOR RETARDER APPLICABILITY[e,f]**~~		
	~~**Insulation R-value**~~			~~**Vapor Retarder Class**~~		
	~~**Cavity**~~	~~**Continuous**~~		~~**Class I**~~	~~**Class II**~~	~~**Class III**~~
~~Cavity Insulation Permeance Greater than 1.5 Perms~~						
~~1,2~~	~~13~~	~~0~~	~~2x4~~	~~NA~~	~~NA~~	~~AS~~
	~~0~~	~~8.5~~				
~~3,4,5~~	~~20~~	~~0~~	~~2x6~~	~~See Table AV103(1)~~		
	~~15~~	~~3.4~~	~~2x4~~	~~AS (Climate Zone 5 only)~~	~~AS~~	~~AS (except R-15+3.4ci in Climate Zone 5 not permitted)~~
	~~13~~	~~4.3~~				
	~~0~~	~~13.2~~				
~~6~~	~~30~~	~~0~~	~~2x8~~	~~See Table AV103.1(1)~~		
	~~20~~	~~4.8~~	~~2x6~~	~~AS~~	~~AS~~	~~See Table AV103.1(2)~~
	~~15~~	~~8.5~~	~~2x4~~			~~AS~~
	~~13~~	~~9.6~~				

	~~0~~	~~18.7~~				
~~7,8[g]~~	~~30~~	~~0~~	~~2x8~~	~~See Table AV 103.1(1)~~		
	~~20[h]~~	~~4.8[h]~~	~~2x6~~	~~AS~~	~~AS~~	~~See Table AV103.1(2)~~
	~~15~~	~~8.5~~	~~2x4~~			
	~~13~~	~~9.6~~				
	~~0~~	~~18.7~~				~~AS~~
~~Cavity Insulation Less Than or Equal to 1.5 Perms at Installed Thickness~~						
~~1,2~~	~~13~~	~~0.0~~	~~2x4~~	~~NA~~	~~NA~~	~~AS[i]~~
	~~5~~	~~4.5~~				
	~~3~~	~~6.0~~				
~~3,4,5~~	~~20~~	~~0.0~~	~~2x6~~	~~AS[i] (Climate Zone 5 only)~~	~~AS[i]~~	~~AS[i]~~
	~~16~~	~~3.0~~	~~2x4~~			
	~~12~~	~~4.8~~				
	~~8~~	~~7.2~~				
	~~4~~	~~10.0~~				
~~6,7,8[g]~~	~~38~~	~~0.0~~	~~2x6~~	~~AS[i]~~	~~AS[i]~~	~~AS[i]~~
	~~20~~	~~4.8~~				
	~~17~~	~~7.5~~	~~2x4~~			
	~~13~~	~~9.6~~				
	~~5~~	~~14.8~~				

~~a. Table component R-value combinations comply with Table N1102.1.4 and are based on calculation in accordance with Section AV102 with wood studs spaced at 16 inches on center (framing factor of 25%). Interpolation of cavity and continuous insulation component R-values shall be prohibited.~~

~~b. Cavity and continuous insulation components, where included, shall be combined as indicated in the table. An R-value of zero '0' indicates that either no continuous insulation or no cavity insulation is required.~~

~~c. Indicated R-values for continuous insulation are minimums that can be exceeded where product availability results in the installation of greater R-values. Where R-values for continuous insulation are shown as '0' for cases with cavity insulation greater than 1.5 perms, any increase in the continuous insulation R-value shall comply with Table AV103.1(2).~~

~~d. Where insulation components are continuous insulation only (no cavity insulation), a separate vapor retarder shall not be required where the water vapor permeance of the continuous insulation product or a continuous material layer towards the interior side of the continuous insulation is not greater than 1 perm.~~

~~e. NA -- vapor retarder not applicable to the indicated Climate Zone.~~

~~f. AS -- acceptable solution deemed to comply with Sections AV102 and AV103 for the indicated vapor retarder and wall insulation condition.~~

~~g. Where the site-specific heating degree day value is greater than 16,200 (65°F basis) [9,000 (18°C basis)], a design shall be required to determine an acceptable solution.~~

~~h. For applications in Climate Zone 7 where the heating degree day value (65°F basis) exceeds 9,900 and in Climate Zone 8, the minimum amount of continuous insulation shall be increased to R-7.0ci and R-10.0ci, respectively. Alternatively, closed-cell spray foam applied to not less than R-7 to the interior face of the exterior sheathing plus additional cavity insulation to achieve a total cavity insulation component R-value of R-20 shall be provided.~~

~~i. Where the cavity insulation permeance at the installed thickness is not greater than 1 perm, or where the continuous insulation permeance is not greater than 1 perm, a vapor retarder as indicated in the table shall not be required.~~

Commenter's Reason: The energy committee recognized the value of the flexibility that the RB373 proposal provides, but expressed concern generated from confusion created by some of the testimony on the floor. None of the testimony identified a technical error, but instead was effective in casting doubt. Conversely, support from the floor indicated the clear need for code officials and code users to deal with and understand the appropriate combination of insulation and vapor retarders for effective moisture control as addressed in RB373 (offered as a useful non-mandatory appendix). Furthermore, the technical basis of this proposal is far from unfounded. It represents a consensus of knowledge drawn from and based on a thorough reconciliation of findings from numerous sources of data and experience documented in the literature by various experts and 30 years of code development in the US and Canada, including also results from the monitoring of many actual occupied buildings. The basis for the proposed provisions are more fully explained and documented in the referenced research report and reason statement included with the original RB373 proposal. The referenced research report includes a review and analysis of findings from an extensive and intensive literature review.

This public comment improves upon the original proposal in response to helpful testimony that Table AV101.1 needed to be simplified. The proposed replacement table in this PC achieves that goal by simply correlating the existing vapor retarder requirements in Section R702.7 of the IRC with the existing prescriptive insulation R-value requirements of Chapter 11 of the

IRC. Thus, it provides a quick cross-check of permissible and code-compliant combinations of vapor retarders and insulation solutions for each climate zone. The remaining technical content of the proposal is unchanged, providing a flexible means of achieving energy code and building code compliance for a variety of insulation and vapor retarder conditions that cannot otherwise be addressed in a simplified prescriptive code format. This will ensure consistency and reasonable equivalency for various alternatives to the current code prescriptive requirements and provide a means for enforcement and approval while preventing avoidable excursions into risky wall assembly conditions due to gaps in the current code. The proposal also permits alternative solutions by means of project-specific hygrothermal analysis (consistent with language added to the 2015 IBC by this proponent) for cases where more precise solutions may be desired or warranted.

Public Comment 2:

Proponent : John Woestman, representing Kellen Company, representing Extruded Polystyrene Foam Association (XPSA) (jwoestman@kellencompany.com) requests Approve as Modified by this Public Comment.

Replace Proposal as Follows:

2015 International Residential Code

BOOK PART APPENDIX V— VAPOR RETARDER AND PRESCRIPTIVE INSULATION COMPONENT R-VALUE COMBINATIONS FOR ABOVE-GRADE WOOD FRAME WALLS

SECTION AV101 General

Table AV101 combines the prescriptive insulation component R-values specified in Table N1102.1.2 and vapor retarder requirements specified in Section R702.7 for above-grade wood-frame walls.

TABLE AV101
VAPOR RETARDER AND PRESCRIPTIVE INSULATION COMPONENT R-VALUE COMBINATIONS FOR ABOVE-GRADE WOOD FRAME WALLS

Climate Zone	Interior Vapor Retarder[d]	2x4 Wall Insulation Components (cavity + continuous)		2x6 Wall Insulation Components (cavity + continuous)	
		Insulation R-value[e]		Insulation R-value[e]	
		Cavity	Continuous[c]	Cavity	Continuous[c]
1,2	Class I	NP[a]	NP[a]	NP[a]	NP[a]
	Class II	13	0	-	-
	Class III	13	0	-	-
3,4	Class I	NP[a]	NP[a]	NP[a]	NP[a]
	Class II	13	5	20	0[b]
	Class III	13	5	20	0
4 Marine	Class I	13	5	20	0
	Class II	13	5	20	0
	Class III	13	5	20	0
5	Class I	13	5	20	0
	Class II	13	5	20	0
	Class III	13	5	20	0[b] or 7.5[c]
6	Class I	13	10	20	5
	Class II	13	10	20	5
	Class III	13	10	20	11.25[c]
7,8	Class I	13	10	20	5
	Class II	13	10	20	5
	Class III	13	10	20	15[c]

a. NP - Not permitted.
b. In lieu of continuous insulation, vented cladding over wood structural panels, fiberboard or gypsum shall be permitted.
c. In lieu of continuous insulation, spray foam with a maximum permeance of 1.5 perms at the installed thickness, applied to the interior cavity side of wood structural panels, fiberboard, insulating sheathing or gypsum is deemed to meet the continuous insulation requirement where the spray foam R-value meets or exceeds the specified continuous insulation R-value.
d. Located on interior side of frame walls.
e. R-values are minimums. When insulation is installed in a cavity which is less than the label or design thickness of the insulation, the installed R-value of the insulation shall not be less than the R-value specified in the table.

Commenter's Reason: This public comment deletes and replaces the original proposal with a relatively simple single table which is intended to combine both the IECC insulation requirements by component (IECC Table R402.1.2) with the IRC vapor retarder requirements (IRC (Section R702.7). This proposed table is intended and designed to include no technical changes, substitutions, deletions, or additions for insulation components or vapor retarder combinations as currently required in the IRC and IECC-R.

This public comment simplifies the original proposal, and consistent with the original proposal, provides a prescriptive application of water vapor retarders corresponding with a variety of insulation strategies to provide a simple and reliable means of addressing the important inter-relationship between the energy code and residential code for energy efficiency and water vapor control.

Note: The line item for "4 Marine" and "Class I" vapor retarder may need to be revised pending the outcome of RB266-16.

RB373-16

RB375-16

IRC: M1503.1, M1507.1, R303.4.

Proposed Change as Submitted

Proponent : Mike Moore, Newport Ventures, representing Broan-NuTone, representing Newport (mmoore@newportventures.net)

2015 International Residential Code

Revise as follows:

R303.4 Mechanical ventilation. Kitchens shall be provided with local exhaust in accordance with Sections M1503 and M1507. Where the air infiltration rate of a *dwelling unit* is 5 air changes per hour or less where tested with a blower door at a pressure of 0.2 inch w.c (50 Pa) in accordance with Section N1102.4.1.2, the *dwelling unit* shall be provided with whole-house mechanical ventilation in accordance with Section M1507.3.

M1503.1 General. Range hoods shall discharge to the outdoors through a duct. The duct serving the hood shall have a smooth interior surface, shall be air tight, shall be equipped with a back-draft damper and shall be independent of all other exhaust systems. Ducts serving range hoods shall not terminate in an attic or crawl space or areas inside the building.

> **Exception:** Where installed in accordance with the manufacturer's instructions, and where mechanical ~~or natural~~ *ventilation* is otherwise provided in accordance with Section M1507.4, *listed* and *labeled* ductless range hoods shall not be required to discharge to the outdoors.

M1507.1 General. Where local exhaust or whole-house mechanical ventilation is provided, the equipment shall be designed in accordance with this section. Local exhaust shall be provided for kitchens in accordance with Section M1507.4.

Reason:

Pollutants from cooking have been identified as some of the worst in the home, in terms of health impacts. Pollution during cooking events includes NO_2, CO, HCHO (formaldehyde), acrolein (produced when cooking meats and oils; used as a nerve agent in WWI), polycyclic aromatic hydrocarbons, and particulate matter (which can become lodged in the lungs or pass through the lungs to the circulatory system.[1,2,3,4,5,6,17,18,19,20,21] Overall, indoor air pollution from residential dwelling units (excluding the impacts of radon and second hand smoke) is estimated to account for 14% of all years of life lost and years of disability associated with "noncommunicable and nonpsychiatric diseases."[7] Based on another study, this is roughly equal to the negative health impacts of alcohol use, diabetes, and HIV/AIDS combined.[8] The lion's share of the health impacts of poor indoor air quality in dwelling units has been linked to particulate matter, and indoor particulate matter is emitted when cooking on both electric and gas stoves.[3,7,9]

Overall, the primary source of particulate matter in non-smoking dwelling units is unvented cooking.[1] Natural ventilation alone is an insufficient means to provide required ventilation because it relies on pressure differentials that may or may not exist, and when they exist, the pressure differential could be equally as likely to spread the pollutant throughout the dwelling unit and neighboring units (in the case of attached dwelling units) as it would be to exhaust the pollutant directly to the outdoors. Further, studies have shown that occupants often do not operate windows for ventilation.[10,11] Concerns with window operation include security and discomfort (including severe draft in winter).

To improve the health and life safety of dwelling unit occupants, this proposal would require that mechanical ventilation be provided for all kitchens in dwelling units. Some compelling facts and quotes on kitchen pollutants and ventilation follow.

- Simulations show that where a natural gas cooktop is used without a vented range hood, "62%, 9%, and 53% of occupants are routinely exposed to NO_2, CO, and HCHO (formaldehyde) levels that exceed acute health-based standards and guidelines."[12]
- "Emissions of nitrogen dioxide in homes with gas stoves exceed the EPA's definition of clean air in an estimated 55 percent to 70 percent of those homes, according to one model; a quarter of them have air quality worse than the worst recorded smog (nitrogen dioxide) event in London. Cooking represents one of the single largest contributors, generating particulate matter (formally known as PM2.5) at concentrations four times greater than major haze events in Beijing."[13]
- Increased exposure to NO2 in dwelling units has been associated with an increased number of asthma attacks.[14,15,16]
- "People don't need to radically change their lifestyles. We need to change the building codes so that everyone gets a venting range hood."- Dr. Jennifer Logue, Research Scientist with Lawrence Berkeley National Laboratory[13]

Bibliography:

1. Wallace, L. A., Emmerich, S. J., & Howard-Reed, C. (2004). Source strengths of ultrafine and fine particles due to cooking with a gas stove. Environmental Science & Technology, 38(8), 2304-2311.

2. Singer, B. C., Apte, M. G., Black, D. R., Hotchi, T., Lucas, D., Lunden, M. M., . . . Sullivan, D. P. (2010). Natural Gas Variability in California: Environmental Impacts and Device Performance: Experimental Evaluation of Pollutant Emissions from Residential Appliances. Sacramento CA: California Energy Commission.

3. Dennekamp, M., Howarth, S., Dick, C. A. J., Cherrie, J. W., Donaldson, K., & Seaton, A. (2001). Ultrafine particles and nitrogen oxides generated by gas and electric cooking. Occupational and Environmental Medicine, 58(8), 511-516.
4. Moschandreas, D. J., & Relwani, S. M. (1989). Field-Measurements of NO2 Gas Range-Top Burner Emission Rates. Environment International, 15(1-6), 489-492.
5. Moschandreas, D., Relwani, S., Johnson, D., & Billick, I. (1986). Emission Rates from Unvented Gas Appliances. Environment International, 12(1-4), 247-254.
6. EPA. Fine Particle Designations. Available at http://www.epa.gov/pmdesignations/faq.htm. Sourced on December 10, 2014.
7. Logue et al. (2012). A method to estimate the chronic health impact of air pollutants in U.S. residences. Environmental Health Perspectives: 120(2): 216–222.
8. McKenna, M.T., C.M. Michaud, C.J.L. Murray, and J.S. Marks. (2005). Assessing the burden of disease in the United States using disability-adjusted life years. Am J Prev Med.: 28(5):415–423.
9. Nicole, W. (2014). Cooking Up Indoor Air Pollution: Emissions from Natural Gas Stoves. Environ Health Perspect: 122-A27.
10. Offerman, F.J. (2009). Ventilation and indoor air quality in new homes. PIER Collaborative Report. California Energy Commission & California Environmental Protection Agency Air Resources Board.
11. Klug, V. L., Lobscheid, A. B., & Singer, B. C. (2011). Cooking Appliance Use in California Homes – Data Collected from a Web-Based Survey LBNL-5028E. Berkeley, CA: Lawrence Berkeley National Laboratory.
12. Logue et al. (2014). Pollutant exposures from natural gas cooking burners: a simulation based assessment for Southern California." Lawrence Berkeley National Laboratory. LBNL-6712E.
13. Smith, P.A. (2013). The Kitchen as a Pollution Hazard. New York Times. http://well.blogs.nytimes.com/2013/07/22/the-kitchen-as-a-pollution-hazard/?_r=0. Accessed December 10, 2014.
14. Belanger, K., Gent, J. F., Triche, E. W., Bracken, M. B., & Leaderer, B. P. (2006). Association of indoor nitrogen dioxide exposure with respiratory symptoms in children with asthma. American Journal of Respiratory and Critical Care Medicine, 173(3), 297-303. doi: 10.1164/rccm.200408-1123OC.
15. Hansel, N. N., Breysse, P. N., McCormack, M. C., Matsui, E. C., Curtin-Brosnan, J., Williams, D. L., . . . Diette, G. B. (2008). A longitudinal study of indoor nitrogen dioxide levels and respiratory symptoms in inner-city children with asthma. Environmental Health Perspectives, 116(10), 1428-1432. doi:10.1289/ehp.11349.
16. Garrett, M. H., Hooper, M. A., Hooper, B. M., & Abramson, M. J. (1998). Respiratory symptoms in children and indoor exposure to nitrogen dioxide and gas stoves. American Journal of Respiratory and Critical Care Medicine, 158(3), 891-895.
17. Abdullahi, K. L., Delgado-Saborit, J. M., & Harrison, R. M. (2013). Emissions and indoor concentrations of particulate matter and its specific chemical components from cooking: A review. Atmospheric Environment, 71, 260-294. doi: Doi 10.1016/J.Atmosenv.2013.01.061.
18. Buonanno, G., Morawska, L., & Stabile, L. (2009). Particle emission factors during cooking activities. Atmospheric Environment, 43(20), 3235-3242. doi: Doi 10.1016/J.Atmosenv.2009.03.044.
19. Fortmann, R., Kariher, P., & Clayton, R. (2001). Indoor air quality: residential cooking exposures. Sacramento, CA: Prepared for California Air Resources Board.
20. Seaman, V. Y., Bennett, D. H., & Cahill, T. M. (2009). Indoor acrolein emission and decay rates resulting from domestic cooking events. Atmospheric Environment, 43(39), 6199-6204. doi: 10.1016/j.atmosenv.2009.08.043.
21. Zhang, Q. F., Gangupomu, R. H., Ramirez, D., & Zhu, Y. F. (2010). Measurement of Ultrafine Particles and Other Air Pollutants Emitted by Cooking Activities. International Journal of Environmental Research and Public Health, 7(4), 1744-1759. doi: 10.3390/ijerph7041744.

Cost Impact: Will increase the cost of construction

For those units that do not already install kitchen exhaust, the cost of construction will increase, depending on equipment selection. Exhaust hoods start around $30 retail (e.g., Broan economy hood #403001, 2-speed, moving 160 cfm, priced on zoro.com at $33.36 with free shipping on December 19, 2014). Most dwelling units have some sort of recirculating exhaust hood at a minimum, so the actual incremental cost could probably be disregarded for the equipment itself. For units that are recirculating only, installed cost to the GC for ducting is estimated at ~$13/linear foot for 3.25x10" duct (RS Means 2013 Residential Cost Data, adjusted for inflation).

RB375-16 : M1503.1-MOORE4906

Public Hearing Results

Committee Action: **Disapproved**

Committee Reason: This proposal eliminates options that are currently allowed by the International Residential Code.

Assembly Motion: **As Submitted**
Online Vote Results: **Failed**
Support: 22.84% (53) Oppose: 77.16% (179)
Assembly Action: **None**

Individual Consideration Agenda

Proponent : Mike Moore, Newport Ventures, representing Broan-NuTone (mmoore@newportventures.net) requests Approve as Submitted.

Commenter's Reason: The committee disapproved this proposal in Louisville because it "limits options", and they are absolutely correct. The code should not permit options that are known to jeopardize public health, as documented through extensive research (see original rationale). Options are appropriate when they can be shown to satisfy a minimum performance standard that does not jeopardize public health, as per R101.3: "Intent. The purpose of this code is to establish minimum requirements to safeguard the public safety, HEALTH and general welfare through AFFORDABILITY, structural strength, means of egress facilities, stability, sanitation, light and VENTILATION, energy conservation and safety to life and property from fire and other hazards attributed to the built environment and to provide safety to fire fighters and emergency responders during emergency operations."

The health-related costs associated with poor indoor air quality, estimated at $300 billion annually,[1,2,3,4,5] far outweigh the costs associated with providing adequate mechanical ventilation in residential kitchens.

Bibliography: 1. Logue JM, Price PN, Sherman MH, and Singer BC. 2012. A Method to Estimate the Chronic Health Impact of Air Pollutants in U.S. Residences. Environmental Health Perspectives 120(2): 216-222.
2. Turner WJN, Logue JM, and Wray CP. 2012. Commissioning Residential Ventilation Systems: A Combined Assessment of Energy and Air Quality Potential Values.
3. Brown DW. 2008. Economic value of disability-adjusted life years lost to violence: estimates for WHO Member States. Rev. Panam Salud Publica, 24, 203-209.
4. Lvovsky K, Huges G, Maddison D, Ostro B, and Pearce D. 2000. Environmental costs of fossil fuels: a rapid assessment method with application to six cities. Washington,D.C.: The World Bank Environment Department.
5. Highfill T and Bernstein E. 2014. Using Disability Adjusted Life Years to Value the Treatment of Thirty Chronic Conditions in the U.S. from 1987-2010. U.S. Department of Commerce Bureau of Economic Analysis WP 2014-9.

RB375-16